Camloc/Ram

- 1/4-Turn Fasteners
- Captive Screws
- PCB Fasteners
- Panel Fasteners
- Clamps
- Locks
- Latches
- Hold-Downs

Specialty Fasteners







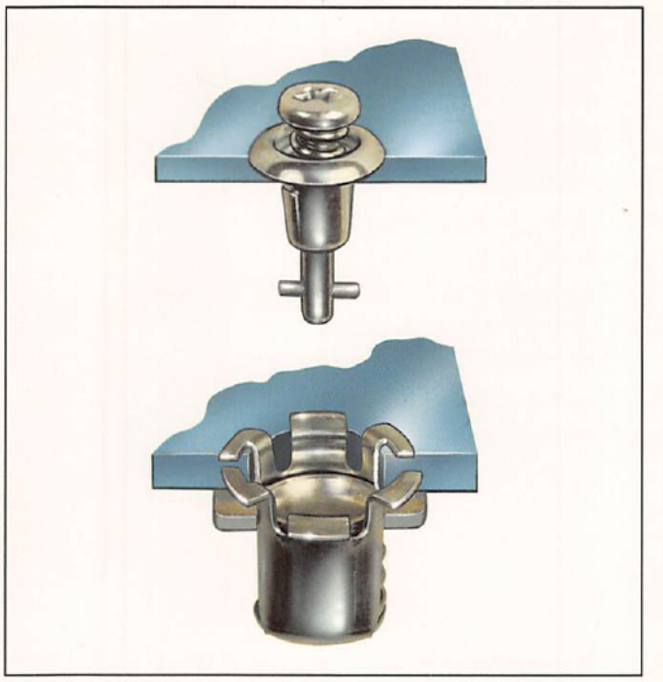

Get quote

Angic Global Solutions 1-888-872-0690
https://www.AngicGlobal.com Sales@AngicGlobal.com

World Class Fasteners From Stock...or Custom Designed

Our Company was established over 50 years ago, when the first Camloc 1/4 turn fastener was designed for rapid servicing of military aircraft. During the half century that followed, we have never wavered from our commitment to provide unique solutions to complex fastener problems.

Those familiar with Camloc will note our name has grown along with our company. Our new name, "Camloc/Ram Products" reflects our merger with sister division RAM—the premier manufacturer of aerospace latching mechanisms and avionic hold-down devices. The joining of our resources is a natural extension of the long standing Camloc position as the leading manufacturer of mechanical specialty fasteners for the aviation market.

Today, Camloc/Ram fastening components and systems secure some of the world's most sophisticated equipment used in the Electronics, Industrial, Transportation, Aerospace and Defense markets.

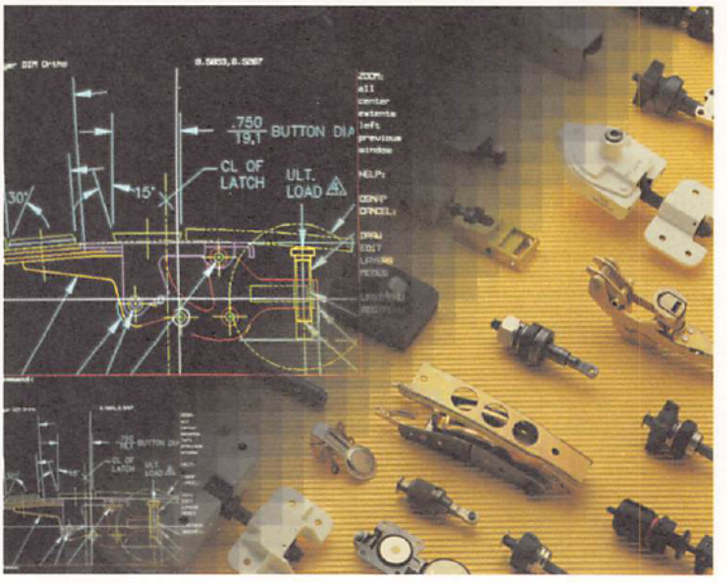

Custom Solutions

This catalog contains a wide variety of our most popular fastener systems. However, it is by no means complete! We are continually creating variations of existing styles and addressing emerging needs for new designs. In this regard, our engineers can provide concurrent design services and provide CAD/CAM drawings to develop the exact solution you require.
We're just a phone call away!

We're There When You Need Us

Camloc/Ram has a network of plants, sales offices and distributors throughout the world, staffed with customer service personnel to assist you in obtaining the specific fasteners you need, when you need them.

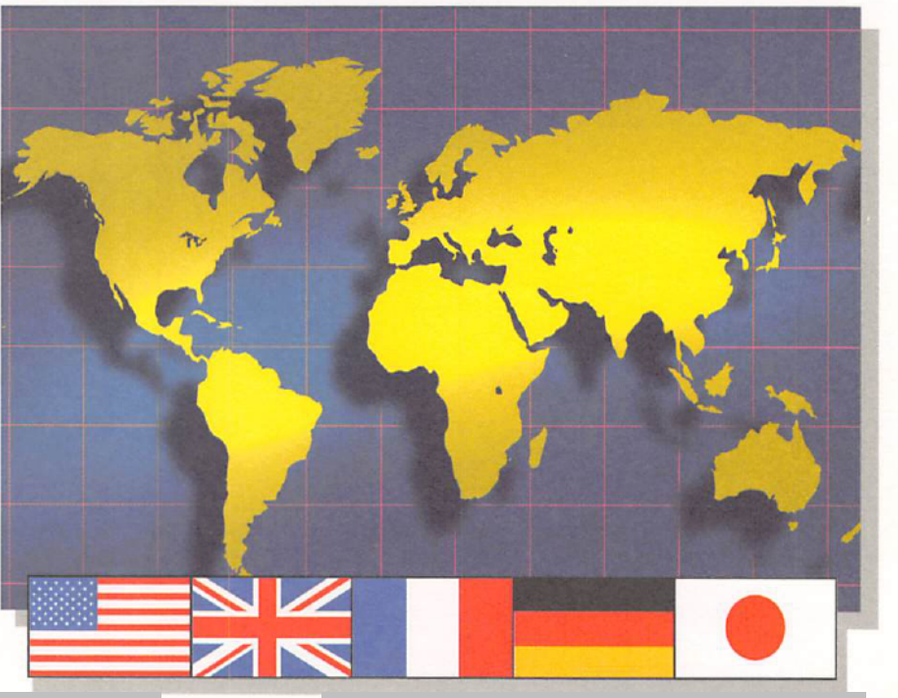

ANGIC
Get quote
Angic Global Solutions 1-888-872-0690
https://www.AngicGlobal.com Sales@AngicGlobal.com

Quality is Key

At Camloc/Ram, quality is the key to our success. Our Total Quality Management (TQM) program is based on the continuous improvement philosophies of W. Edwards Deming. Our procedures include a Camloc/Ram Quality Manual, Statistical Process Control (SPC)(Lockheed approved) and Quality Review Teams. Our manufacturing processes are certified to MIL-I-45208A, and we are an approved supplier to all major aircraft manufacturers. In addition, we have received the Ford Qualitas Award and are an approved supplier to many manufacturing recipients of the Malcolm Baldrige Quality Award.



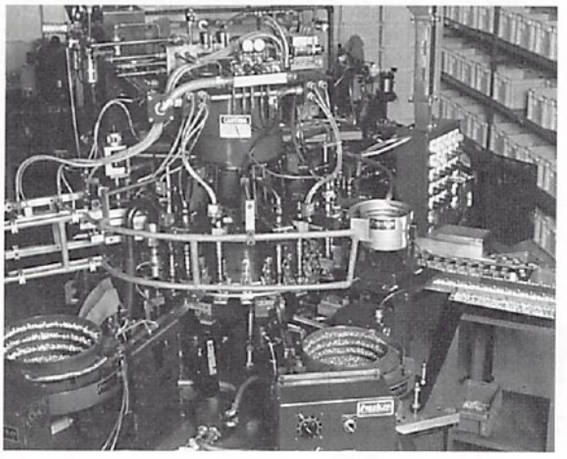

Modern Manufacturing

Our cellularized manufacturing facility is vertically integrated, from primary material conversion through final finishing to assure total control of all processes. Manufacturing Resource Planning (MRP) is utilized to coordinate production for timely delivery of orders.

Camloc (U.K.) Ltd
15 New Star Road
Leicester, LE4 7JD
England
Telephone: 011-44-533-763161
Fax: 011-44-533-760103

Camloc France Sarl
P.A. de la Danne-Eragny
B.P. 14-95611 Cergy-Pontoise
Cedex, France
Telephone: 011-33-1-3432-3030
Fax: 011-33-1-3037-1269

Camloc GmbH
IndustriestraBe 6, D-65779 Kelkheim
Postfach 1180, D-65761 Kelkheim
Germany
Telephone: 011-49-6195-805-0
Fax: 011-49-6195-2001

Fairchild Japan Ltd
6F Chiyoda Building
1-16 Kugenuma Hanazawa
Fujisawa, Kanagawa 251
Japan
Telephone: 011-81-466-27-2722
Fax: 011-81-466-27-2777

Camloc/Ram Products Division
3016 West Lomita Blvd.
Torrance, CA 90505
Telephone: 310/784-2600
Fax: 310/784-2656

Camloc/Ram

Part of The Fairchild Corporation

©Copyrigh ANGIC Get quote n.

Angic Global Solutions 1-888-872-0690
https://www.AngicGlobal.com Sales@AngicGlobal.com

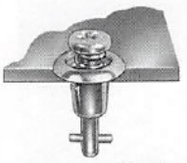

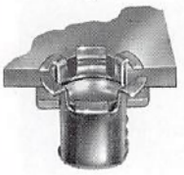

A 1/4-Turn Fasteners

Choosing A Specialty Fastener Manufacturer ..... A-4 – A-5
Typical 1/4-Turn and Quick Operating Fasteners ..... A-6 – A-7
Designer and Selector Guides ..... A-8 – A-12
Fastening Takes a 1/4 Turn* A-13
5F Series ..... A-14 – A-19
36F/38F Series ..... A-20 – A-21
2600/2700 Series ..... A-22 – A-33
28F Series ..... A-34 – A-36
50F Series-General Purpose ..... A-38 – A-41
50F Series Extra Heavy Duty ..... A-42 – A-43
Fastener Enhances Van Safety* A-44
4002 Series ..... A-45 – A-63
91F Series ..... A-64 – A-66





B Other Quick-Operating Fasteners

Section Contents B-1
15F Series ..... B-2 – B-6
49F Series B-7
79F Series ..... B-8 – B-10
34F/39F Series ..... B-11 – B-14
KM Series ..... B-15 – B-17
Structural Panel Fasteners ..... B-19 – B-22



C Captive Screws

Section Contents & Selector Guide C-1
21T Series ..... C-2 – C-3
22T Series ..... C-4 – C-5
Panel Preparation C-6
Design Problems & Solutions C-7



D Inserts

RivIT Inserts ..... D-2 – D-6





E Printed Circuit Board Fasteners, Avionic Hold-Down Mechanisms And Chassis Latches

Wedg-Tite® Retainers Introduction ..... E-1 – E-2
53S Series, 3-Piece Versions E-3
54S Series, 5-Piece Versions E-4
Installation E-5
Custom Insertion/Extraction Devices E-6
PCB Injector/Ejector Levers ..... E-7 – E-9
Avionic Hold-Down Mechanism Introduction ..... E-10 – E-11
Self-Locking Hold-Downs ..... E-12 – E-19
Load Limiting Hold-Downs ..... E-20 – E-25
Hold-Down Hinges and Hook Supports . E-26 – E-28

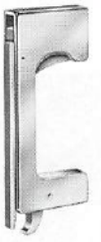

Chassis Latches Selector Guide E-29
21L/40L Series ..... E-30 – E-33
61L Series ..... E-34 – E-39
72L Series ..... E-40 – E-43
37F Series PC Board Fastener ..... E-44 – E-46



F Clamps

7C Series ..... F-1 – F-5

G Key Switches/Key Locks

Introduction ..... G-1 – G-3
PTSL01 ..... G-4
PTSL06 ..... G-5
PTCL38 ..... G-6
PTCL01 ..... G-7
PTCL02 ..... G-8
PTCL10 ..... G-9
PTCL25/PTCL28 ..... G-10
PTCL12/PTCL56/PTCL59 ..... G-11
PTCL66/PTCL69 ..... G-12



ANGIC
Get quote
Angic Global Solutions 1-888-872-0690
https://www.AngicGlobal.com Sales@AngicGlobal.com

Table of Contents

H Commercial & Industrial Latches

Section Contents H-1
Typical Latches for Electronic Equipment ..... H-2 – H-3
Tension Latches - Design Features ..... H-4 – H-58



Light Duty Tension Latches

Selector Guide ..... H-6 – H-7
30L Series H-8
34L Series H-9
95L/96L Series ..... H-10 – H-11
47L Series H-12
Typical Custom Latches H-13



Medium Duty Tension Latches

Selector Guide ..... H-14 – H-15
20L Series ..... H-16 – H-18
29L Series H-19
51L Series ..... H-20 – H-23
69L Series ..... H-24 – H-25
When To Use Latches H-26



Heavy Duty Tension Latches

Selector Guide H-27
17L/18L Series ..... H-28 – H-29
37L Series ..... H-30 – H-35
137L Series H-36
46L/49L Series ..... H-37 – H-39
58L Series ..... H-40 – H-41



Pawl Latches

Selector Guide H-43
64L Guide ..... H-44 – H-45
65L Guide ..... H-46 – H-47
106L Series ..... H-48 – H-51
122L and 123L Series ..... H-52 – H-55

Panel Latches



Section Contents & Selection Guide .. H-56 – H-57
KM610/KM680 Series ..... H-58 – H-59
118L Series ..... H-60 – H-61
104L Series ..... H-62 – H-63
PT104L Series H-63
119L Series ..... H-64 – H-65

I Ram Aerospace Mechanisms

Introduction I-1

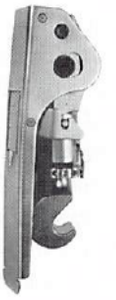

Section Contents I-2

Hook Latches ..... I-3 – I-8
Low Profile Hook Latches ..... I-9 – I-12
Adjustable Hook Latches ..... I-13 – I-18
Hook Latch Keepers ..... I-19 – I-28
Hook Latch and Keeper Fittings ..... I-29 – I-30
Pressure Relief Latches ..... I-31 – I-36
Push Button Latches ..... I-37 – I-44
Shear Tension Latches ..... I-45 – I-48
Rotary Latches ..... I-49 – I-54
Rotary Latch Strikers ..... I-55 – I-56
Shear Pin Latch Assembly ..... I-57 – I-60
Latch Handles ..... I-61 – I-66



Hinges ..... I-67 – I-72
Hydraulic Snubber Assemblies ..... I-73 – I-76

Part Number Index ..... i-iii

The products described and offered for sale in this catalog are produced to the quality standards of Camloc/Ram Products Division and meet the physical and functional requirements specified. Conformance to quality or certification requirements other than stated herein must be specified in writing prior to order acceptance by Camloc/Ram Products Division.

ANGIC GLOBAL SOLUTIONS
Get quote
Angic Global Solutions 1-888-872-0690
https://www.AngicGlobal.com Sales@AngicGlobal.com

Choosing a Specialty Fastener Manufacturer

(Camloc article excerpts as appeared in Machine Design)

Sometimes there is no way around the need for a special-purpose fastener. But careful supplier selection will keep costs in line and may yield a few unexpected advantages.

Although the word custom is usually associated with a higher cost, this type of design may actually prove less costly and more effective in the long run. The first task is to decide just what is needed. This is usually not a unilateral decision by the design engineer, but one in which the purchasing and manufacturing departments should also participate. Once needs are determined, the next step is to choose a manufacturer with the right experience and knowhow. There are several key factors to consider when critiquing potential manufacturers.

Preliminary considerations

Standard fasteners are usually considered first when resolving a product assembly problem. But, if it seems a standard won't do the job, a custom or special fastener design must be evaluated.

Research first: Many fasteners now considered standard by some companies started off as specials. Therefore, a review of supplier catalogs could reveal that the needed part is already available. Or, simple modification of existing designs could resolve the problem.

A company's own files should be checked. A fastener may have been designed for an earlier project, but never used in production. As more companies become automated, a computer run through the files may provide answers.

Custom or standard?: If new fastener design is indicated, the first decision is whether a custom design is worth the added investment of time and money. Custom fasteners have research and development costs to weigh against future savings. If custom costs are too high, the customer may elect to live with the design compromises a standard fastener may require.

Manufacturer evaluation: There are numerous ways to obtain information about specific manufacturers. The direct approach is through telephone contact or a visit. Manufacturers typically offer case histories or testimonials that provide their ability to perform. To verify such information, contact customers that can offer specifics on their dealings with the special manufacturer. What types of fasteners they were supplied with, and what problems occurred during production? These tips from previous customers can alert the design engineers to possible problem areas that could arise in his own dealings with the company.

Manufacturers who appear more intent on making a sale than solving problems should be avoided. Observing the attitudes of prospective manufacturers early in the selection process could prevent problems later on. Some problems can be identified before they happen. But there are those that require troubleshooting during the design process. Both sides must be willing to cooperate to resolve the headaches.

Final selection

The evaluation process becomes more complex after a supplier is found who gets good reviews and can apparently provide the needed custom designs. Important issues such as part production and cost then take priority.

Internal design: The ideal situation is one where a special manufacturer designs the fasteners in-house. Using outside design services complicates matters in terms of late delivery and higher costs. An in-house method is preferred, because the same company handles all development phases from designing the model to building prototypes. Small changes are made more economically with one company and there is less of a temptation to compromise the design.

The design process goes more smoothly if the customers bring the problem and not preconceived ideas about the design. Designer creativity is hampered by customers who are close-minded about design ideas. They are, in effect, forced into a specific design that probably will not be what the customer really wants. The result may be costly, unwelcome redesigns.

Some manufacturers, in lieu of a new design, take on the task of modifying a current one to meet customer needs. Not all manufacturers perform this service and timing plays an important role in this area.

Prototypes: The manufacturer should have the ability to provide prototypes. If the supplier has facilities on the premises to handle these tests, it is a further assurance that the final design will be exactly what was desired.

It is imperative that customers be allowed to test prototypes under actual working conditions. This allows customers to locate design problems, if any, that can be changed before final production begins.

Pre-production runs can also point out design problems during the manufacturing process. Testing and documentation of all phases should be agreed upon in advance to determine if supplier or customer will perform these tasks and at what cost, if any.

ANGIC
Get quote
Angic Global Solutions 1-888-872-0690
https://www.AngicGlobal.com Sales@AngicGlobal.com

Costs: It is important to have a reasonable handle on what the fastener will cost in terms for each phase of development phase. Typically, research and development costs will not increase very much unless there are serious design problems or severe disagreements between customer and supplier. Each service, including designing, testing, and building prototypes, usually has an associated price tag.

However, potential problems during production require special attention. Changing customer demands frequently contribute to rising costs. For instance, if a design alteration has to be made immediately, it will cost more than a change that has a liberal time constraint. Sometimes manufacturers have allowances for problems, but each one maintains different policies.

Keep in mind that the potential volume of the fastener helps defray the research and development costs of the manufacturer. For example, if a customer needs 5,000 pieces but the manufacturer must produce 50,000 pieces to realize development costs, the customer will make up the cost difference. Customers must evaluate all variable costs and determine whether a custom design is worth it. Note that research development and tooling costs associated with a new design may be entirely absorbed by the supplier, if the production quantities are large enough.

Location: Supplier location takes on increasing importance as product development continues. Customers usually have frequent meetings with knowledgeable representatives from the manufacturer. It is therefore usually agreed that representatives of the manufacturer will be available to the customer at no cost or at some predetermined fixed cost.

Final product delivery also takes into account the location of supplier and customer. Shipping costs from a supplier located too far away may drive the cost out of reason.

Operating considerations

The final area to be considered is how well the manufacturer will perform while designing, manufacturing, and delivering the product. While this is difficult to evaluate in advance, the design engineer can protect himself by setting standards for vendors to follow.

Problem solving: Suppliers must be committed to solving problems that occur during the development phase. There are warning signs that enable customers to identify when events are not proceeding as well as anticipated. If the manufacturer is pushing the customer toward a standard instead of a specialty fastener, the customer should question the supplier fairly because the supplier may have a legitimate reason for offering the standard. If it appears the supplier does not want to cooperate, any problems that arise will be hard to overcome.

Deliveries: One of the simplest ways to judge manufacturers is to see if they consistently meet delivery dates. A clue to determining the company's ability to make on-time deliveries is to observe turnaround time for the manufacturer's other products that may have been purchased. Purchasing departments help in this area.

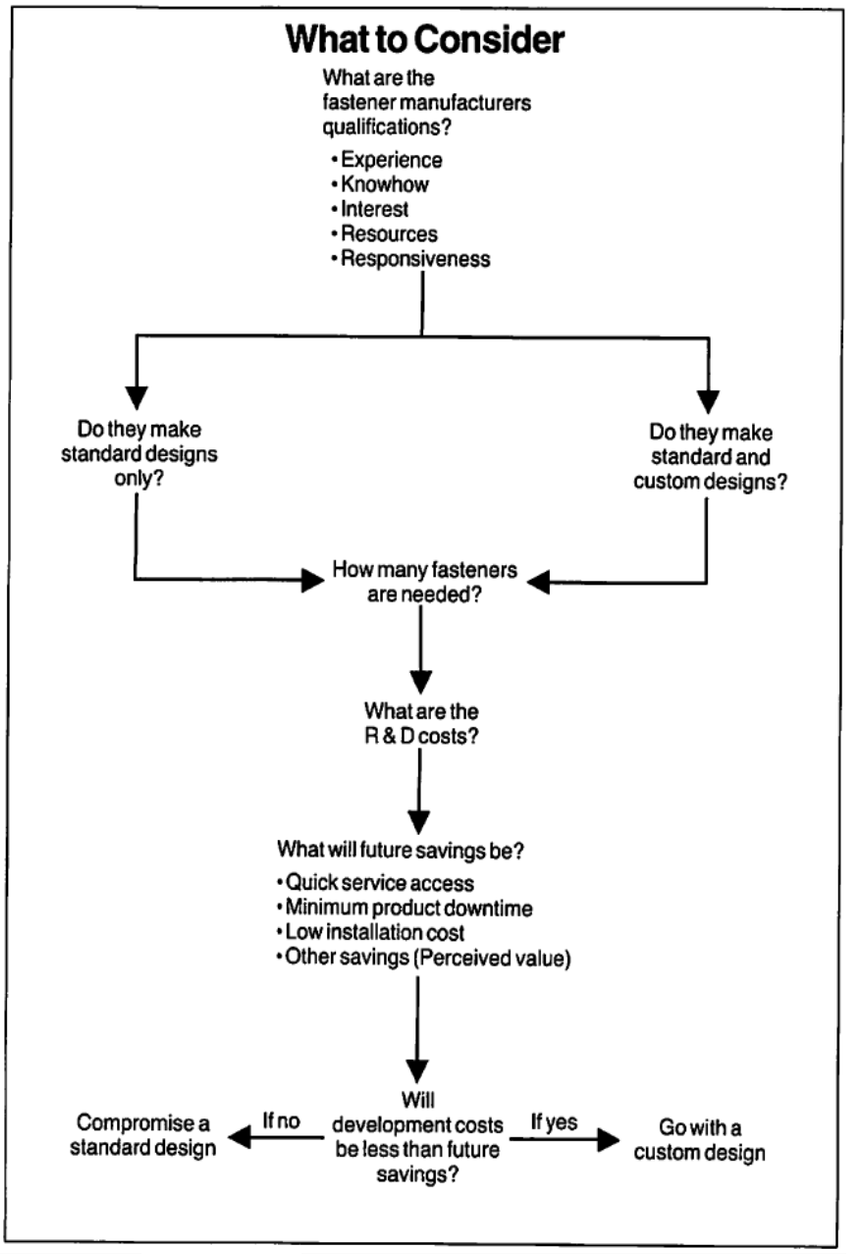

Get quote
Angic Global Solutions 1-888-872-0690
https://www.AngicGlobal.com Sales@AngicGlobal.com

Camloc 1/4-Turn Fasteners for Low Installed Costs.



5F Series. Low cost, high speed installation. Tool and hand-operated snap-in studs. Receptacle clips onto frame by hand.

General Purpose Fasteners:



2600/2700 Series. Widest selection of hand and tool-operated studs. Large choice of receptacles, including ultrasonic and hand-installed.



50F Series. Mid-size fastener with snap-in stud and clip-on receptacle.



4002 Series. High strength, vibration-resistant; heavy-duty use. Clip-in and floating receptacles. Studs come with 4mm & 6mm hex recesses.

Typical Applications



Electronic Computing & Office Equipment

Receptacles for blind installation into plastic molded components and metal square tubing.

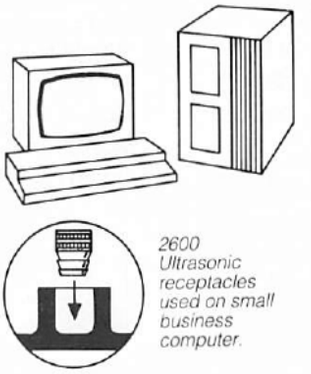

2600 Ultrasonic receptacles used on small business computer.

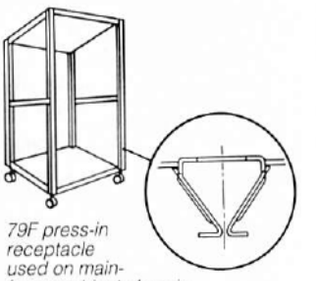

79F press-in receptacle used on main-frame cabinet chassis.

Concealed fasteners provide smooth panel appearance.

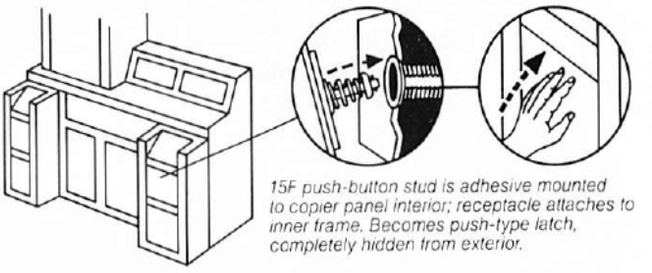

15F push-button stud is adhesive mounted to copier panel interior; receptacle attaches to inner frame. Becomes push-type latch, completely hidden from exterior.

Quick-Operating Fasteners With Special Features.

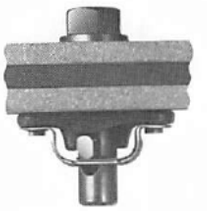

34F/39F Series. A unique adjustable cross pin allows variable clamping loads and provides the ability to compensate for variations in joint thickness as well as gasket set. Capable of carrying high-tensile loads.

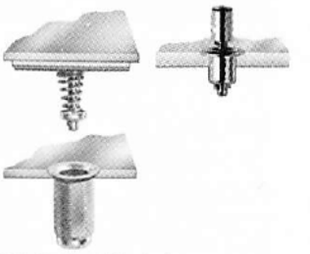

15F Series. Push-to-open, push-to-close fastener is available with numerous stud actuators including an adhesive mounted concealed version.

Camloc® is a registered trademark for specialty fasteners produced by Camloc Products Division, part of The Fairchild Corporation.

ANGIC GLOBAL SOLUTIONS Get quote

Angic Global Solutions 1-888-872-0690
https://www.AngicGlobal.com Sales@AngicGlobal.com

Table of Contents



Instrumentation & Telecommunications

Hand installed 1/4-turn fasteners for high speed assembly.

Stud Assembly

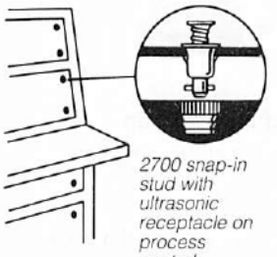

2700 snap-in stud with ultrasonic receptacle on process control console.

Receptacles

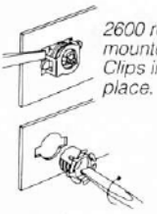

2600 rear mounted. Clips into place.

2600/2700, front loaded. Installs with a 90°-turn.

One Piece 36F 1/4-Turn Fastener.

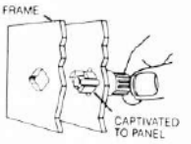

Turn in one direction to captivate to panel. Rotate in opposite direction to secure to frame.

Adjustable preload fastener for RFI/EMI suppression.

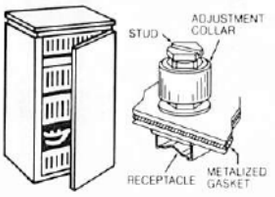

32F adjustable fastener provides secure and easy access to central PBX telephone equipment.

Receptacle clips-on to electronic chassis rail.

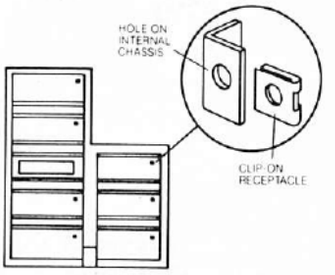

5F, clip-on, used on electronic chassis rail of central processing unit.



79F Series.* Snap-in studs and receptacles for low cost installation. Push stud to close; open with 1/4-turn. Tool-operated head styles include 3mm hex recess.

*Patented

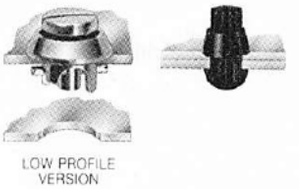

36F/38F Series. One piece fastener available in hand and low-profile, tool-operated styles. No receptacle required.

Index

	Page No.
¼-Turn Fastening System	A-8 - A-9
¼-Turn & Quick Operating Fastening Systems	A-10 - A-12
5F Series Miniature fastener with clip-on receptacle	A-14 - A-19
36F/38F Series One-piece assemblies eliminate retaining rings and mating receptacles	A-20 - A-21
2600/2700 Series General purpose with wide choice of studs and receptacles	A-22 - A-33
28F Series Low profile receptacles and studs designed for decorative styling	A-34 - A-36
50F Series. General Purpose General purpose with clip-on receptacle and snap-in grommet	A-38 - A-41
50F Series. Extra Heavy-Duty Tensile strength to 800 lbs. for use in adverse industrial environments	A-42 - A-43
4002 Series Heavy-duty fasteners with wide choice of receptacles and studs	A-45 - A-63
91F Series Extra heavy-duty fasteners where high strength and clamping force are needed	A-64 - A-66
15F Series Push-button and push-panel fasteners that push to open and close. See Section B	B-2 - B-6
49F Series Features snap-in stud and snap-in receptacle for easy, quick installation. See Section B	B-7
79F Series Locks with a push of a thumb; unlocks with a ¼-turn. See Section B	B-8 - B-10
34F/39F Series Adjustable cross pin allows variable clamping loads and provides ability to compensate for thickness variations. See Section B	B-11 - B-14
37F Series Designed to fasten circuit boards into mating connector or for large take-up applications. See Section B	E-44-E-46

A

ANGIC GLOBAL SOLUTIONS
Get quote
Angic Global Solutions 1-888-872-0690
https://www.AngicGlobal.com Sales@AngicGlobal.com

1/4-TURN FASTENING SYSTEM

- The quickest operating high re-use mechanical fastening system available.
- Securely locks and quickly unlocks within a 1/4-turn every time, time after time.



2600/2700 Series

An assembled fastening system normally consists of a stud and receptacle, the panel and frame, and a method of retaining the stud. Stud retention might be a grommet or a retaining ring, or both. Some series shown include snap-in type studs which do not require the use of a retaining ring, and some studs do not require retaining rings or receptacles.

A choice of receptacle types are included with each stud series. Most attach by rivets to the underside of the frame. Some, however, simply snap into place from the front or from the rear of a frame, and some are ultrasonically installed.

Optional Styles:

If you don't see a design in this catalog to suit your needs, consult the factory or your Camloc field sales representative. Special designs, or other materials, styles and finishes are available for the 1/4-turn fasteners shown in this catalog.

Design Principle: A Quick Operating Cam.

Each receptacle has a built-in quick operating cam. The mating stud assembly has an integral cross pin which acts as a cam follower.

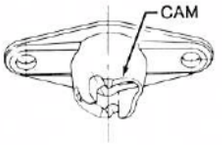

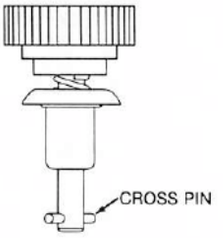

How It Operates:

When the stud assembly is rotated, the stud cross pin rides up the cam causing a controlled joint preload to be applied. This action is accomplished by rotating the stud 90°.

At that point a positive mechanical stop is reached and the cross pin falls into locking detents. Excellent resistance to vibration induced loosening is assured.

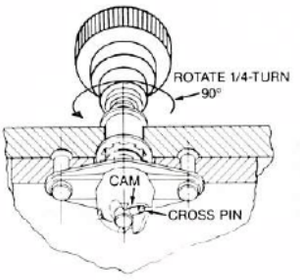

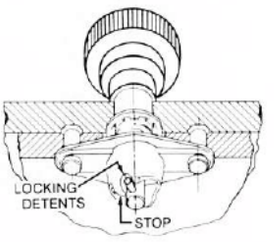

Built-in Spring Component Insures Controlled Preload, High Cycle Life.

Unlike threaded fasteners, Camloc fasteners do not rely on the elasticity of joint and fastener materials to accomplish preload. The stud assembly or receptacle is designed with a spring component. This allows repeated application of controlled preload with assured reliability over an extremely high number of cycles.



2600 Series with Ultrasonic Receptacle



5F Series

Labor Saving Designs Speed Installation.

A variety of designs are available which allow significant savings in installed cost:

Receptacles which eliminate riveting, welding and the need for special tools.

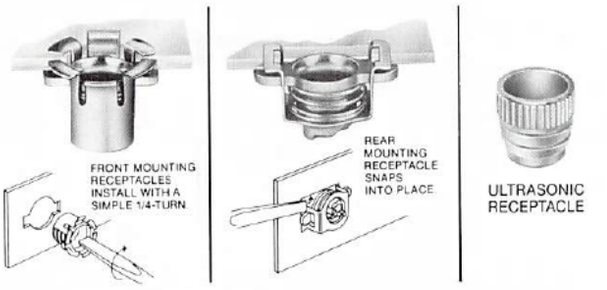

Stud assemblies which snap into panels with ordinary thumb pressure, eliminating retaining rings.



26F Series



50F Series

Designs which eliminate both retaining rings and mating receptacles (36F/38F Series).

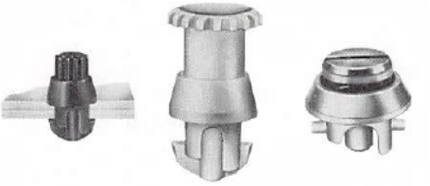

36/38F Series

Get quote

Angic Global Solutions 1-888-872-0690
https://www.AngicGlobal.com Sales@AngicGlobal.com

1/4-TURN FASTENING SYSTEM

How To Select The Correct Fastener:

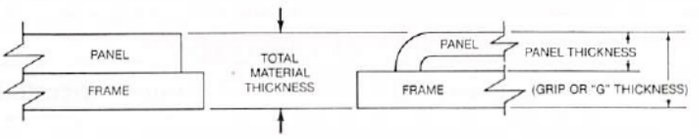

1. See Stud Selector Guide on Pages A-10 and A-11 to choose desired stud based on strength requirements, head style, installation method and operational characteristics.

2. Choose one of the receptacles shown with each fastener series. (Note frame thickness limitations with certain receptacles.) See Receptacle Selector Guide on Page A-12.

3. When calculating total material thickness, be sure to consider any paint, finishes or compressed gaskets involved.

See Stud Selector Guide and Section Index on following page.

A

Design Considerations for Using 1/4-Turn Fasteners vs. Threaded Bolts/Nuts

1/4-Turn Fasteners	Threaded Bolts/Nuts
Frequently Operated — Repeatable Performance.	Seldom Operated Because Serviceability Not A Design Factor. More Structural In Nature, Limited Life If Operated Often.
Quick Accessibility — Allows Fast Removal Of Access Panels.	Disassembly Is Time Consuming And Usually Infrequent.
User Convenience, Simple To Operate.	More Difficult To Operate Due To Multiple Turns Necessary To Install And Remove.
Controlled Joint Preload, But Limited Ability To Accept Variations In Material Thickness.	Inconsistent Compression Of Panel Gasket But Capable Of Handling Large Grip Ranges.
Low Installed Cost For New Generation Of High Speed Assembly Types (i.e., Snap-In Rivetless Types).	Installation Is Simple But Time Consuming.
All Fastener Components Captivated.	Generally Not Captivated — Subject To Being Lost Or Misplaced.
Vibration Resistant.	Relies On Thread Engagement — Subject To Loosening Under Vibration.
Reduced Service/ Maintenance Time.	Increased Service/ Maintenance Time.
More Expensive But Adds Value To Finished Product.	Less Expensive (4 to 5 Times), But Readily Offset On Applications With Frequent Service Requirement.

1/4-TURN FASTENER TECHNICAL DESCRIPTION

Definition:

A 1/4-turn fastener is a through-joint fastener which locks and unlocks by rotating the stud 90°

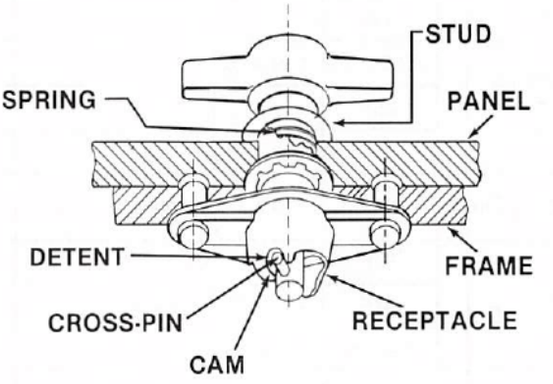

Characteristics of 1/4-Turn Fasteners (vs. Bolts/Nuts):

1. Non-Threaded Design — Operation based on a stud with projecting cross-pin, which travels up a sloped cam against the force of a compression spring, and locks into a detent beyond the high point of the cam.
2. Internal spring provides controlled joint preload, resulting in even compression of panel.
3. Positive vibration security provided by locking detent.

ANGIC
Get quote
Angic Global Solutions 1-888-872-0690
https://www.AngicGlobal.com Sales@AngicGlobal.com

Stud Selector Guide Illustrations are typical only and vary by part number

	Series Number	Page Number	Ultimate Tensile Strength (lbs.)	Versions Manufactured to MIL-F-5911**	PROTRUDING HEADS: Tool-Operated: Slotted Recess	Cross Recess	Recess Style	Hex Socket	Hex Head	Slotted Hex	Hand-Operated: Folding Wing	Fixed Wing	Offset Fixed Wing
Miniature Series	5F	A-14-A-15	150		● Δ	● Δ						● Δ	
	49F	B-7	*		Δ								
General Purpose Series	2600/2700	A-24-A-26	300	●	● Δ	● Δ	●	● Δ				●	
	28F	A-34	300		●	●						●	
	50F	A-38-A-39	200		● Δ	● Δ						● Δ	● Δ
Heavy Duty	4002	A-46-A-47	1050	●	●	●	●	●				●	●
Extra Heavy Duty	50F	A-44	800		●							●	●
	91F	A-64-A-65	1800							●		●	
	39/34F	B-11–B-12	5000/10,000						●				
Designs With Special Features	15F	B-2–B-3	*										
	36/38F	A-20	*		●								
	79F	B-8–B-9	*		● Δ	● Δ		● Δ					
	KM	B-15	*								●	●	
	37F	E-44-E-46	150		●	●		●				●	

*For strength values, contact Camloc Products Division.
**Meets the design, physical and performance requirements of MIL-F-5591. However, full mechanical properties testing may not be performed on each production lot.

General Purpose Fasteners



2600/2700 Series with ultrasonic receptacle



2600/2700 with rear mount receptacle

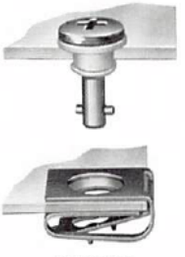

50F Series

2600/2700 Series is available with front-mount, rear-mount and ultrasonic receptacles. The 50F is a simple design for use in industrial and agricultural applications.

Heavy Duty Fasteners



4002 Series

The 4002 Series utilizes grommet in top panel for added strength.

Extra Heavy Duty Fasteners

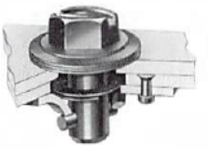

The 91F is a simple, rugged design; ideal for industrial and agricultural equipment requiring high strength.

91F

Get quote
Angic Global Solutions 1-888-872-0690
https://www.AngicGlobal.com Sales@AngicGlobal.com

1/4-TURN & QUICK OPERATING FASTENING SYSTEMS

●=Illustrated in catalog
Δ=Snap-in versions available

PROTRUDING HEADS						FLUSH MOUNTING					DESIGNS WITH SPECIAL FEATURES			
Hand-Operated						Tool-Operated								
Folding Ball Handle	Knurled Head	Knurled Knob	Plastic Knob	Plastic T-Knob	Handle Operated	Slotted Recess	Cross Recess	Recess Style per NAS4000	Recess Style per NAS1078	High Torque	Tamper Resistant	Sealed	Push to Operate	Self-Captivating for Rapid Installation
●Δ		●Δ	●Δ	●Δ			●Δ							●
●	●	●	●Δ	●Δ		●Δ	●Δ	●	●	●		●		●
			●Δ	●Δ										
●		●				●	●	●			●	●		
			●	●										
			●									●		
					●									
													●	
		●	●											●
											●Δ		●	●
														●
			●	●										

A

Miniature Fasteners





5F Series





49F Series

55F Series

Low profile versions and decorative styles. Unique receptacles available such as clip-c
installed and

Designs with Special Features



15F Series



36/38F Series



79F Series



34F Series



37F Series

15F; push to lock and push to unlock. 36/38F; one-piece; eliminates retaining rings and mating receptacles. 79F; push to lock; 1/4-turn to unlock; ideal for sheetmetal panels. 34F/39F; adjustable cross pin allows variable clamping loads and provides the ability to compensate for variations in joint thickness as well as gasket set. 37F; positive insertion and
emove printed

S

ANGIC GLOBAL SOLUTIONS
Get quote
Angic Global Solutions 1-888-872-0690
https://www.AngicGlobal.com Sales@AngicGlobal.com

1/4-TURN & QUICK OPERATING FASTENING SYSTEMS — SELECTOR GUIDE

Receptacle Selector Guide

Illustrations are typical only and vary by part number

● = Illustrated in catalog.

	Series Number	Page Number	Standard Mounting	Side Mounting	Riveteless For Rapid Installation: Clip-on	Riveteless For Rapid Installation: Front Loading	Riveteless For Rapid Installation: Rear Loading	Riveteless For Rapid Installation: Ultrasonic	Corner Mounting	Special Purpose	Encapsulated	Floating	Weld Attachment
Miniature Series	5F	A-15 A-16	●	●	●								
	49F	B-7				●							
General Purpose Series	2600/2700	A-27-A-30	●	●		●	●	●	●	●	●		●
	28F	A-34	●	●	●								
	50F	A-38			●								
Heavy Duty	4002	A-48-A-50	●	●			●				●	●	●
Extra Heavy Duty	50F	A-42	●										●
	91F	A-64-A-65	●				●					●	●
	39/34F	B-11–B-12	●										●
Designs With Special Features	15F	B-3–B-4								●			
	36/38F	A-20							NONE REQUIRED				
	79F	B-8	●			●							
	KM	B-15							NONE REQUIRED				
	37F	E-11	●								●		

System Accessories Provide Increased Versatility.

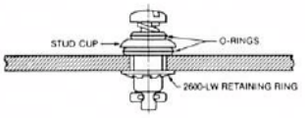

O-Rings for Sealing

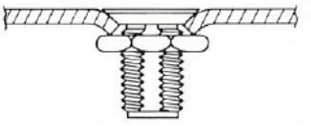

Single hole mounting receptacle

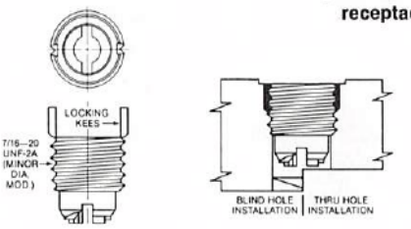

KEENSERT insert receptacle

Selected Installation Tools Are Available As a Convenience.

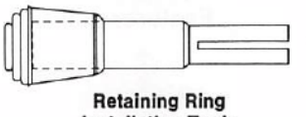

Retaining Ring Installation Tools

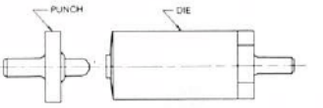

Dimpling Tools

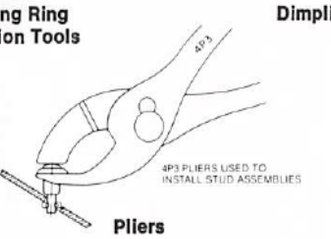

Pliers

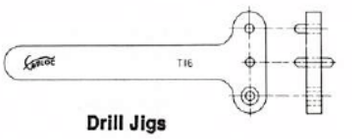

Drill Jigs

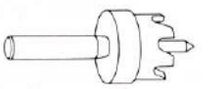

Hole Saws

Get quote

Angic Global Solutions 1-888-872-0690
https://www.AngicGlobal.com Sales@AngicGlobal.com

Fastening Takes a Quarter Turn

An innovative idea in fastening spawns multiple variations

(Article reprinted from Appliance Magazine)

A

All quarter turn fasteners are turned 90 degrees to lock them into a detent; or in reverse, to unlock them. Unlike threaded fasteners, they provide a spring-initiated, controlled preload that does not rely on the elasticity of the joined and fastener materials. This allows a very high number of repeated fastening/unfastening cycles.

All quarter turn fasteners of the early 1970's required either retaining rings, mating receptacles, or both. Looking forward to applications that would need direct fastening without receptacles, a designer at Camloc Products Division developed a line that utilizes only punched holes in the panel and frame. The fastener is of one piece construction, and is operated either by hand or screwdriver (see Figure 1). The construction materials are a zinc plated steel stud, a cross pin, and a die cast zinc alloy base with optional nickel plating.

Two years passed before this design was applied. It has since been used on electronic access panels, lighting fixtures, and business appliances. Potential applications include computers, peripherals, telecommunication, and process control equipment.

Variations

The original design has been modified to suit individual requirements. There are now eight different versions. A, B, C, D, and E were developed for electronic banking equipment. The E type was developed for initial installation by a robot and subsequent hand operation. Robotic mounting

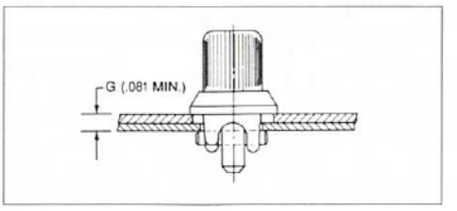

Figure 1. The original Camloc quarter turn receptacleless fastener.

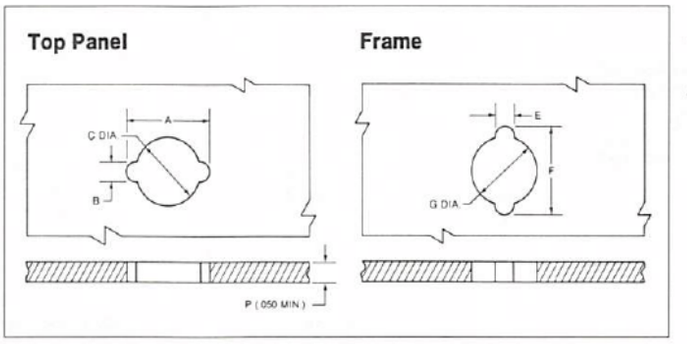

Figure 2. Hole configurations for the first receptacleless fastener.

Dimensions For Panel Preparation

Series	"Top" Panel			Frame		
	A	B	C Dia.	E Min.	F	G Dia.
36S	.545 / .535	.115 / .105	.380 / .372	.120	.560	.390 / .380
38S	.685 / .675	.167 / .157	.505 / .495	.170	.760 / .740	.525 / .515

is facilitated by a slotted knob top, which aids rotation and orientation, and by two sets of cross pin detents located at the same level in the die cast body. These detents are shaped to reduce the force needed to depress the stud spring during installation. The G and H version have a black plastic knob, which is designed for easier hand turning.

Other versions of this design include one with pushbutton activation for speed, and one with oversize cross pins (version F) to accommodate oversize installa- tion holes in electronic equipment panels, which are edged with RG gasketing mesh.

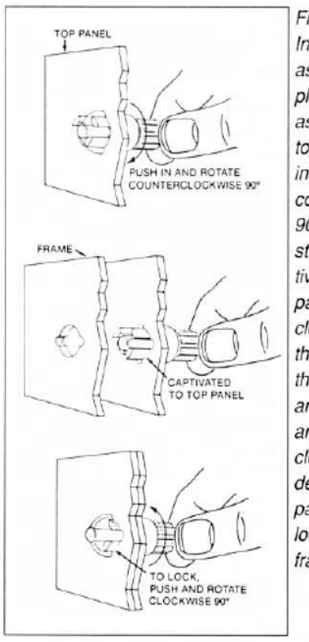

Figure 3. Installing the stud assembly. First, place the stud assembly in the top panel, push in, and rotate it counter clockwise 90 degrees. The stud is now captivated in the panel. Second, close the panel so the stud enters the frame hole and then push it and rotate it clockwise 90 degrees. The panel is now locked to the frame.

Get quote

Angic Global Solutions 1-888-872-0690
https://www.AngicGlobal.com Sales@AngicGlobal.com

5F Series. Miniature Stud Assemblies and Receptacles

Features: Minimum stud head projection.
- Wide range of head styles. • Variety of materials.
- Stud available with either retaining ring or snap-in grommet for quick assembly.

Small and compact, these fasteners feature a high strength-to-weight ratio. They are specifically designed for use on miniaturized equipment.

Note: Part numbers shown are basic part numbers only. See ordering information on Page A-18 and A-19 for required dash numbers.

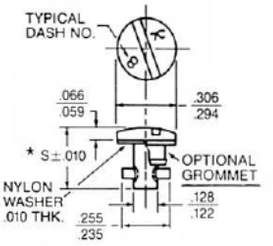

* S = .264 + (.015 x Dash No.)
Slotted Recess

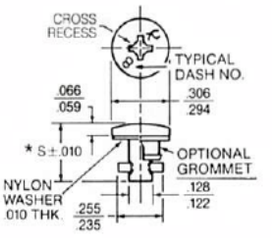

* S = .264 + (.015 x Dash No.)
Cross Recess

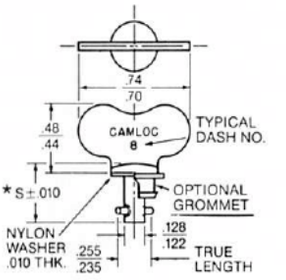

* S = .264 + (.015 x Dash No.)
Fixed Wing

Material	Used With Retaining Ring	With Nylon Snap-in Grommet**	Used With Retaining Ring	With Nylon Snap-in Grommet**	Used With Retaining Ring	With Nylon Snap-in Grommet**
Stainless Steel	5S35-[ ]	5S34-[ ]-[ ]BB	5S15-[ ]	5S54-[ ]-[ ]BB	—	5S55-[ ]-[ ]BB
Steel (Cadmium Plated)	5S5-[ ]	5S34-[ ]-[ ]AA	5S1-[ ]	5S54-[ ]-[ ]AA	5S10-[ ]	5S55-[ ]-[ ]AA
Steel (Nickel Plated)	5S27-[ ]	—	—	—	5S28-[ ]	—
Steel (Satin Black Enamel)	5S5-[ ]A	—	—	—	—	—
Steel (Chrome Plated)	—	—	—	—	—	—
Maximum Service Temperatures	300° F.		5S15 = 550° F. (Supplied with S.S. washer in lieu of nylon.) All others 300° F.		300° F.	

Plastic Knob Styles

Basic Part Nos.

		Shank Material: Steel (zinc plated) Maximum Service Temperature: 300° F.			
		Black	Red	Grey	Beige
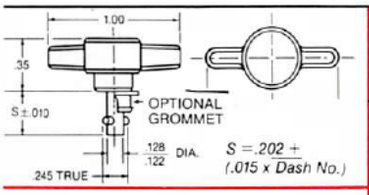	**T-Knob** Used With Retaining Ring	5S58-[ ]-1AA	5S58-[ ]-1AB	5S58-[ ]-1AC	5S58-[ ]-1AD
	With Nylon Snap-in Grommet**	5S51-[ ]-[ ]AA	5S51-[ ]-[ ]AB	5S51-[ ]-[ ]AC	5S51-[ ]-[ ]AD
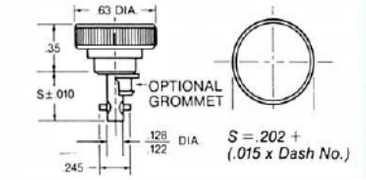	**Knurled Knob** Used With Retaining Ring	5S59-[ ]-1AA	5S59-[ ]-1AB	5S59-[ ]-1AC	—
	With Nylon Snap-in Grommet**	5S52-[ ]-[ ]AA	5S52-[ ]-[ ]AB	5S52-[ ]-[ ]AC	—

****Note:** Use of grommet increases maximum head protrusion .030 inch.

ANGIC Get quote
Angic Global Solutions 1-888-872-0690
https://www.AngicGlobal.com Sales@AngicGlobal.com

A

Typical Assembly

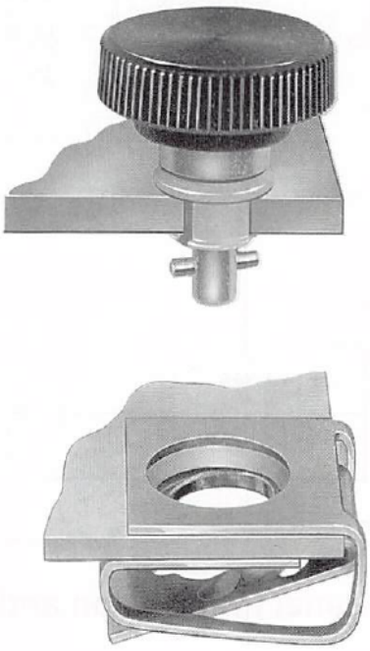

Specifications:

Ultimate tensile strength: 150 lbs.

Working strength: 100 lbs.

Stud grip increments: .015 inch.

For optional styles, materials and finishes, contact the Camloc Products Division.

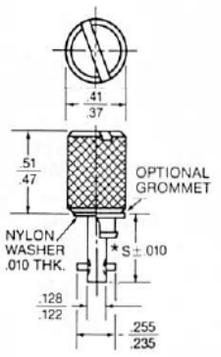

* S = .202 + (.015 x Dash No.)

Knurled Knob

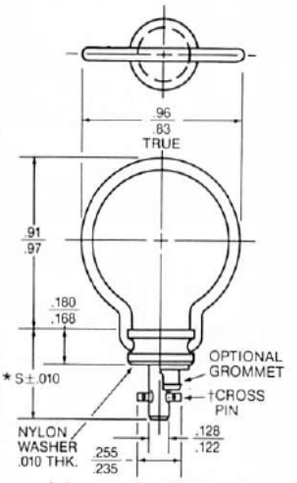

* S = .366 + (.015 x Dash No.)

Folding Bail Handle

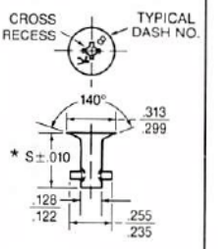

* S = .192 + (.015 x Dash No.)

Flush-Head Cross Recess

Used With Retaining Ring	With Nylon Snap-in Grommet **	Used With Retaining Ring	With Nylon Snap-in Grommet **	Used With Retaining Ring
5S25-[ ]B	5S57-[ ]-[ ]BB	5S37-[ ]-2BB	5S60-[ ]-[ ]BB	5S44-[ ]-1AA
—	—	5S37-[ ]-1AA	5S60-[ ]-[ ]AA	5S7-[ ]
—	—	—	—	—
—	—	—	—	—
5S25-[ ]	5S57-[ ]-[ ]AA	—	—	—
300° F.		5S37-[ ]-2BB version: 550° F. (supplied with stainless steel washer in lieu of nylon). Steel versions: 300° F.		5S7 = 450° F. 5S44 = 550° F.

†The position of handle relative to cross pin varies by part number.

Retaining Ring

Order separately. Retaining Ring not required when Snap-in Grommet style is specified.

See Page A-58 for installation.

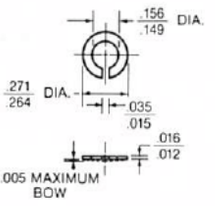

Part No.	Material	Maximum Service Temperature
5S3-1	Steel (Cadmium Plated)	450° F.
5S3-2	Stainless Steel	550° F.

Weight per 100 pcs.: .02 lbs.

ANGIC GLOBAL SOLUTIONS Get quote
Angic Global Solutions 1-888-872-06905
https://www.AngicGlobal.com Sales@AngicGlobal.com

Receptacles

Clip-on Type

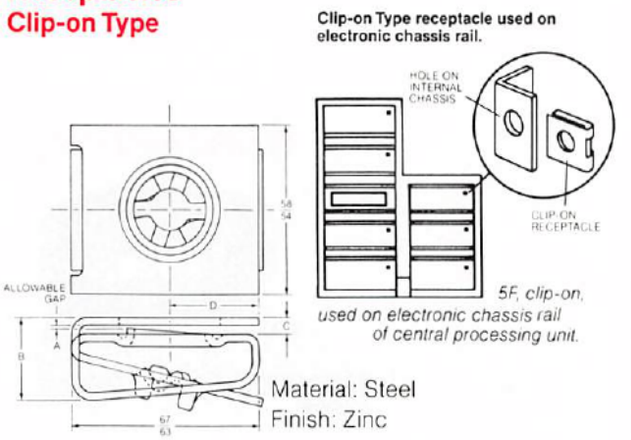

Material: Steel
Finish: Zinc

Part No.	A Ref.	B	C	D
5R16-1-1AA	.010	.29 / .25	.08 / .04	.33 / .29
5R16-2-1AA	.085	.37 / .33	.15 / .11	.26 / .22

Standard or Side Mounting Versions

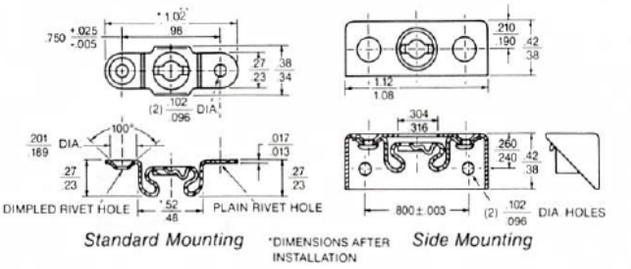

Standard Mounting *DIMENSIONS AFTER INSTALLATION *Side Mounting*

Standard Mounting Part No.	Side Mounted Part No.	Material	Rivet Holes	Temp.
5R2-1	5R3-1	Steel (Cad. Plated)	Plain	450° F.
5R2-2	—	Steel (Cad. Plated)	Dimpled	450° F.
5R2-3	—	Stainless Steel	Plain	550° F.
5R2-4	—	Stainless Steel	Dimpled	550° F.

(5R2) weight per 100 pcs.: 0.21 lbs.
(5R3) weight per 100 pcs.: 0.54 lbs.

Panel Preparation and Installation Data

Studs with Snap-In Grommet

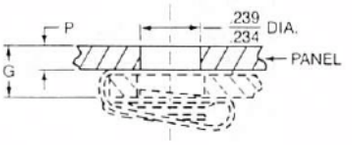

Form through hole to .234-.239 diameter. Panels with thicknesses greater than .115 inch must be back counterbored to a concentric .375 inch diameter with a remaining material thickness of .115 inch max. Note: Snap-in grommets will protrude from the backside of the panel. Minimum total thickness "G" must be observed to prevent grommets from jamming against the receptacle.

P max.	G min.
.070	.095
.115	.140

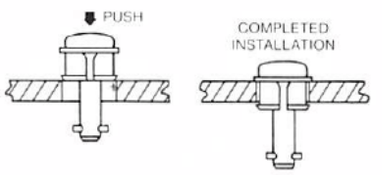

Place stud/grommet assembly on hole and push down to snap into place.

Protruding Head Studs with Retaining Ring

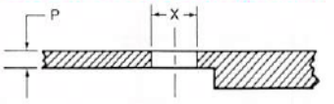

Determine panel thickness "P" and form through hole to corresponding "X" diameter. Note: Panels with thicknesses greater than .090 inch must be back counterbored to a concentric .375 inch diameter with a remaining maximum material thickness of .090 inch.

P	X dia.
up to -.054	.215-.225
.055-.090	.229-.239

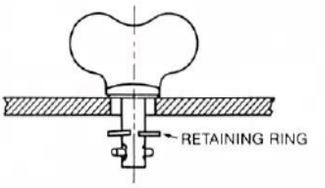

Insert stud through panel and attach retaining ring.

Flush Head Studs with Retaining Ring

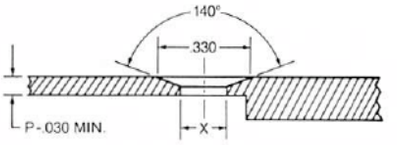

Panel preparation is the same as for protruding heads except countersink is required as shown. A minimum panel "P" thickness of .030 inch is recommended.

P	X dia.
.030-.054	.205-.215
.055-.090	.229-.239

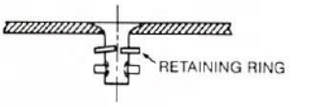

Insert stud through panel and attach retaining ring.

Get quote
Angic Global Solutions 1-888-872-0690
https://www.AngicGlobal.com Sales@AngicGlobal.com

Panel Preparation and Installation Data (Continued)

Frame Preparation for Receptacle Installation (Rivet Type)

5R2 Standard Mount

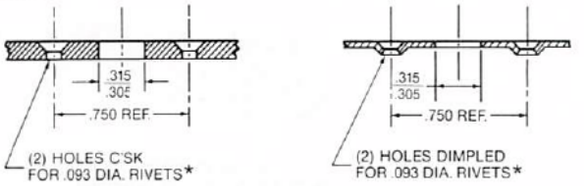

Drilled and Countersunk Rivet Holes

Dimpled Rivet Holes

5R3 Side Mount

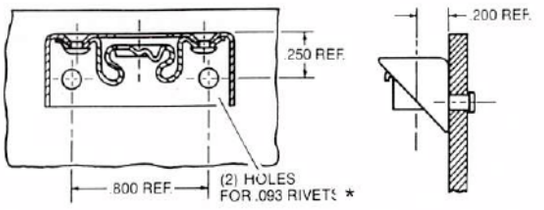

* RIVETS NOT FURNISHED

Stud Ejector Spring For Plain Rivet Holes

Provides full retraction of stud assembly to allow opening and closing of equipment without the possibility of jamming or damage.

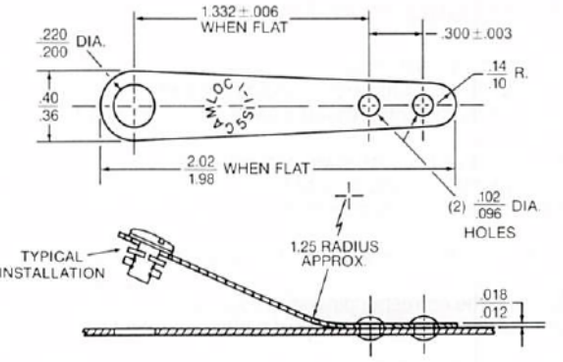

Part No.	Material and Finish	Temperature
5S11-1	Spring Steel (Cad. Plated)	450° F.
5S11-1A	Spring Steel (Black Finish)	450° F.

Note: Add .015 to total "G" thickness when using this part.
Weight per 100 pcs.: .23 lbs.

Frame Preparation for Clip-On Receptacle Installation

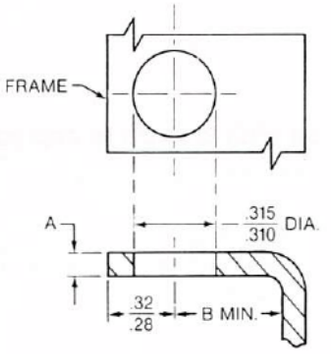

Form through hole to .310 - .315 diameter.

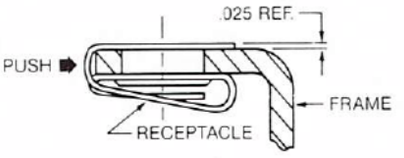

Slide receptacle onto frame and locate on through hole.

Part No.	A Frame Thickness	B Min.
5R16-1-1AA	.001-.080	.35
5R16-2-1AA	.081-.130	.35

Recessed Frame

Standard installation will cause minimum gap of .025 inch between panel and frame due to receptacle protrusion. To eliminate gap, dimple frame to provide recess as shown.

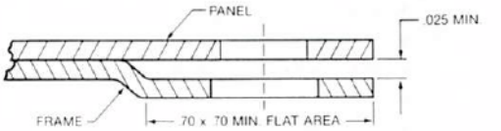

Get quote
Angic Global Solutions 1-888-872-0690
https://www.AngicGlobal.com Sales@AngicGlobal.com

5F SERIES. Order Information/Stud and Grommet Dash Number Selection.

Using Clip-On Receptacles.

To Select Stud Dash Number.

1. Determine "G" thickness.
Note: Increase "G" to allow for thickness of paint or other finishes and for the compressed thickness of any gasket.

2. Stud dash number varies with retention method (Retaining Ring vs. Snap-in Grommet). This information must be known before proceeding.

3. Locate "G" total thickness from the table below right.

4. Then find the corresponding stud dash number in the column designated for the selected method of retention.

5. When using Snap-in Grommets, specify the Grommet dash number corresponding to top panel thickness "P".

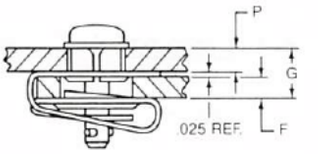

Stud Assembly with Nylon Snap-in Grommet

How to Order:

Example 1.
(For stud assemblies using retaining ring)

Stud Assembly Used: 5S5- [?]
"G" Total Thickness = .160 inch
Retention Method = Retaining Ring
Stud Dash Number From Table = -17
Complete Part Number: 5S5-17

Example 2.
(For stud assemblies using snap-in grommet)

Stud Assembly Used: 5S34-[ ]-[ ]-AA
- Grommet Dash Number
- Stud Dash Number
- Basic Part Number

"G" Total Thickness = .160 inch
Stud Dash Number From Table = —18
"P" Panel Thickness = .053
Grommet Dash Number From Table = —5
Complete Part Number: 5S34-18-6-AA

GROMMET DASH NUMBER SELECTION		
P Max.	Dash Numbers	G Min.
.055	— 5*	.080
.070	— 6	.095
.115	— 9	.140
.145	—11*	.170

*Contact Camloc

Stud Part Number Structure

5S71-[ ]-1AC
- Material and Finish
- Stud Dash Number (Based on Total Thickness, "G")
- Basic Part Number

For Studs Used With Clip-On Receptacles

Stud Dash Number Selection		
	Stud Assembly	
"G" Total Thickness	Dash Numbers For Studs Using Retaining Rings	Dash Numbers For Studs With Snap-In Grommets
.050-.064	–10	–11
.065-.079	–11	–12
.080-.094	–12	–13
.095-.109	–13	–14
.110-.124	–14	–15
.125-.139	–15	–16
.140-.154	–16	–17
.155-.169	–17	–18
.170-.184	–18	–19
.185-.199	–19	–20
.200-.214	–20	–21
.215-.229	–21	–22
.230-.244	–22	–23
.245-.259	–23	–24
.260-.274	–24	–25

***Note:** If "G" total thickness is very near the top of the thickness range, selection of the next greater dash number is recommended. For "G" thicknesses greater than those tabulated, contact Camloc Products Division.*

Get quote
Angic Global Solutions 1-888-872-0690
https://www.AngicGlobal.com Sales@AngicGlobal.com

A

Using Rivet Type Receptacles.

To Select Stud Dash Number.

1. Determine "G" thickness.
Note: Increase "G" to allow for thickness of paint or other finishes and for the compressed thickness of any gasket.

2. Stud dash number varies with retention method (Retaining Ring vs. Snap-in Grommet) and with the receptacle used. This information must be known before proceeding.

3. Locate "G" total thickness from the table below.

4. Then find the corresponding stud dash number in the column designated for the selected combination of retention and receptacle.

5. When using Snap-in Grommets, specify the Grommet dash number corresponding to top panel thickness "P."

5R2 STANDARD MOUNT RECEPTACLE

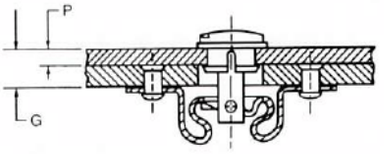

Note: *Add .015 to total "G" thickness when using stud ejector spring.*

5R3 SIDE MOUNT RECEPTACLE

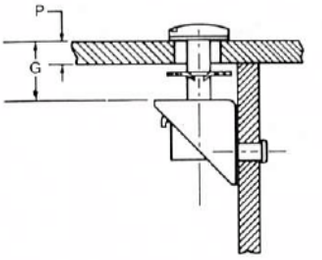

How to Order:

Example 1.
(For stud assemblies using retaining rings.)

Stud Assembly Used: 5S5-[?]

"G" Total Thickness = .160 inch
Receptacle Used = 5R2 (Standard Mount)
Retention Method = Retaining Ring
Stud Dash Number From Table = -10
Complete Part Number: 5S5 -10

Example 2.
(For stud assemblies using snap-in grommets.)

Stud Assembly Used: 5S34-[?]-[?]-AA

- Grommet Dash Number
- Stud Dash Number
- Basic Part Number

"G" Total Thickness = .160 inch
Receptacle Used = 5R2 (Standard Mount)
Retention Method = Snap-In Grommet
Stud Dash Number From Table = -11
"P" Panel Thickness = .053
Grommet Dash Number From Table = -6
Complete Part Number: 5S34-11-6

GROMMET DASH NUMBER SELECTION		
P Max.	Dash Numbers	Min. Grip
.070	—6	.095
.115	—9	.140

For Studs Used With Standard Or Side Mount Receptacles

Stud Dash Number Selection				
"G" Total Thickness	Stud Assembly			
	Dash Numbers For Studs Using Retaining Rings		Dash Numbers For Studs With Snap-In Grommets	
	Receptacles		Receptacles	
	5R2 Std. Mount	5R3 Side Mount	5R2 Std. Mount	5R3 Side Mount
.020-.034	- 1	- 2	—	—
.035-.049	- 2	- 3	—	—
.050-.064	- 3	- 4	—	—
.065-.079	- 4	- 5	—	—
.080-.094	- 5	- 6	—	—
.095-.109	- 6	- 7	- 7	- 8
.110-.124	- 7	- 8	- 8	- 9
.125-.139	- 8	- 9	- 9	-10
.140-.154	- 9	-10	-10	-11
.155-.169	-10	-11	-11	-12
.170-.184	-11	-12	-12	-13
.185-.199	-12	-13	-13	-14
.200-.214	-13	-14	-14	-15
.215-.229	-14	-15	-15	-16
.230-.244	-15	-16	-16	-17
.245-.259	-16	-17	-17	-18
.260-.274	-17	-18	-18	-19
.275-.289	-18	-19	-19	-20
.290-.304	-19	-20	-20	-21
.305-.319	-20	-21	-21	-22
.320-.334	-21	-22	-22	-23
.335-.349	-22	-23	-23	-24
.350-.364	-23	-24	-24	-25
.365-.379	-24	-25	-25	—
.380-.394	-25	—	—	—

Importa
thickne
recomm
contact

ANGIC GLOBAL SOLUTIONS Get quote
Angic Global Solutions 1-888-872-0690
https://www.AngicGlobal.com Sales@AngicGlobal.com

QUICK OPERATING 1/4-TURN FASTENERS 36F/38F SERIES

Features: One piece assembly eliminates retaining rings and mating receptacles. • Simply push down and turn 90° to lock or unlock. • Installs blind from one side of panel. • Particularly suited for electronic access panels, lighting fixtures, office equipment and recreational vehicles.

Note: Part numbers shown are basic part numbers only. See ordering information for required dash numbers.

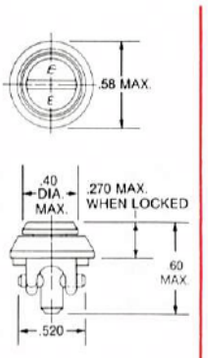

Slotted Recess

Material	Part No.
Stud: Steel (Zinc Plated, Clear Chromate) Cross Pin: Steel (Cadmium Plated) Bushing: Zinc (Zinc Plated, Clear Chromate)	36S05-[ ]-1AA
Stud: Steel Cross Pin: Steel (Cadmium Plated) Bushing: Zinc Stud and Bushing Finish: Nickel Plated	—
Stud: Steel (Zinc Plated, Clear Chromate) Bushing: Zinc (Zinc Plated, Clear Chromate) Cross Pin: Steel (Zinc Plated)	—

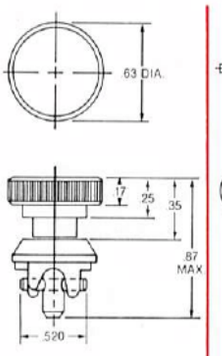

Knurled Knob

Material	Part No.
Stud: Steel (Zinc Plated, Clear Chromate) Cross Pin: Steel (Cadmium Plated) Bushing: Zinc (Zinc Plated, Clear Chromate)	36S05-[ ]-3AA
Stud: Steel Cross Pin: Steel (Cadmium Plated) Bushing: Zinc Stud and Bushing Finish: Nickel Plated	36S05-[ ]-3AB
Stud: Steel (Zinc Plated, Clear Chromate) Bushing: Zinc (Zinc Plated, Clear Chromate) Cross Pin: Steel (Zinc Plated)	—

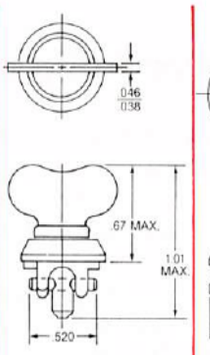

Wing Head

Material	Part No.
Stud: Steel (Zinc Plated, Clear Chromate) Cross Pin: Steel (Cadmium Plated) Bushing: Zinc (Zinc Plated, Clear Chromate)	36S05-[ ]-4AA
Stud: Steel Cross Pin: Steel (Cadmium Plated) Bushing: Zinc Stud and Bushing Finish: Nickel Plated	—
Stud: Steel (Zinc Plated, Clear Chromate) Bushing: Zinc (Zinc Plated, Clear Chromate) Cross Pin: Steel (Zinc Plated)	—

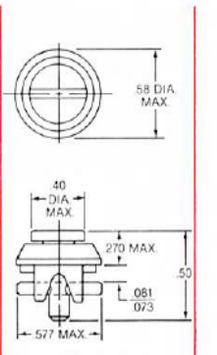

Slotted Recess, Long Cross Pin

Material	Part No.
Stud: Steel (Zinc Plated, Clear Chromate) Cross Pin: Steel (Cadmium Plated) Bushing: Zinc (Zinc Plated, Clear Chromate)	—
Stud: Steel Cross Pin: Steel (Cadmium Plated) Bushing: Zinc Stud and Bushing Finish: Nickel Plated	—
Stud: Steel (Zinc Plated, Clear Chromate) Bushing: Zinc (Zinc Plated, Clear Chromate) Cross Pin: Steel (Zinc Plated)	36S10-3-1AA

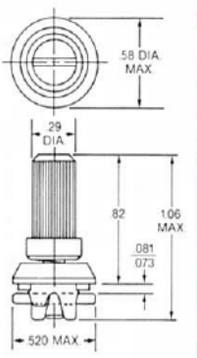

V-Notch Type

Material	Part No.
Stud & Bushing: Zinc (Zinc Plated, Clear Chromate) Cross Pin: Steel (Zinc Plated, Blue Chromate)	—
Plastic (Black), Steel Spring	—
Plastic (White), Steel Spring	—
Stud: Zinc (Zinc Plated, Clear Chromate) Bushing: Zinc (Zinc Plated, Blue Chromate) Cross Pin: Steel (Zinc Plated, Blue Chromate)	36S11-3-1AA

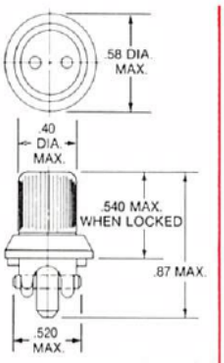

Knurled Knob

Material	Part No.
Stud & Bushing: Zinc (Zinc Plated, Clear Chromate) Cross Pin: Steel (Zinc Plated, Blue Chromate)	36S01-[ ]-1AA
Plastic (Black), Steel Spring	—
Plastic (White), Steel Spring	—
Stud: Zinc (Zinc Plated, Clear Chromate) Bushing: Zinc (Zinc Plated, Blue Chromate) Cross Pin: Steel (Zinc Plated, Blue Chromate)	—

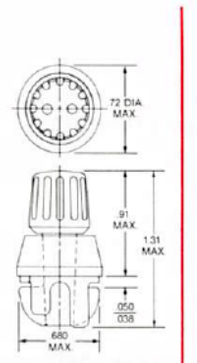

Knurled Knob

Material	Part No.
Stud & Bushing: Zinc (Zinc Plated, Clear Chromate) Cross Pin: Steel (Zinc Plated, Blue Chromate)	—
Plastic (Black), Steel Spring	38S01-[ ]-1AB
Plastic (White), Steel Spring	38S01-[ ]-1AA
Stud: Zinc (Zinc Plated, Clear Chromate) Bushing: Zinc (Zinc Plated, Blue Chromate) Cross Pin: Steel (Zinc Plated, Blue Chromate)	—

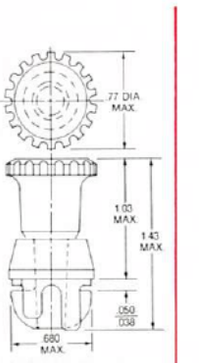

Knurled Knob

Material	Part No.
Stud & Bushing: Zinc (Zinc Plated, Clear Chromate) Cross Pin: Steel (Zinc Plated, Blue Chromate)	—
Plastic (Black), Steel Spring	38S01-[ ]-2AB
Plastic (White), Steel Spring	38S01-[ ]-2AA
Stud: Zinc (Zinc Plated, Clear Chromate) Bushing: Zinc (Zinc Plated, Blue Chromate) Cross Pin: Steel (Zinc Plated, Blue Chromate)	—

Maximum Service Temperature: 250°F. Plastic versions meet U.L. Specification #94HB.

Specifications:

Ultimate tensile strength:
36F Series: 100 lbs.
38F Series: 40 lbs.

Stud grip increment:
36F Series: .050 inches
38F Series: .180 inches

Stud Part Number Structure

36S05-[ ]-1AA

- Material and Finish
- Stud Dash Number (Based on Total Thickness, "G")

Get quote

Angic Global Solutions 1-888-872-0690
https://www.AngicGlobal.com Sales@AngicGlobal.com

Panel Preparation and Installation Data

Top Panel **Frame**

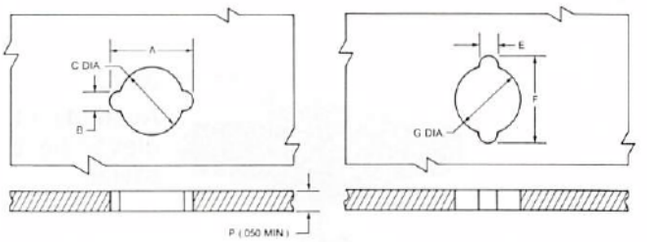

Dimensions For Panel Preparation						
Series	"Top" Panel			Frame		
	A	B	C Dia.	E Min.	F	G Dia.
36S	.545 / .535	.115 / .105	.380 / .372	.120	.560	.390 / .380
38S	.685 / .675	.167 / .157	.505 / .495	.170	.760 / .740	.525 / .515

Form through holes in top panel and frame as shown.
Important Notes: *1) Long axis "A" of top panel hole must be rotated 90° from long axis "F" of frame hole. 2) If close alignment is maintained between top panel and frame mounting holes, top panel dimensions may be used for both.*

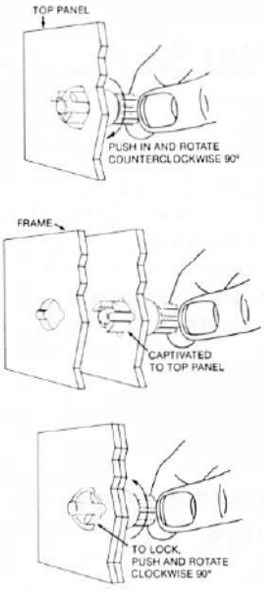

Installing Stud Assembly

1. Place stud assembly in top panel. Push in and rotate counter clockwise 90°. Stud is now captivated to panel.

2. Close panel so that stud enters frame hole and then push and rotate clockwise 90°. Panel is now locked to frame.

Ordering Information/Stud Dash Number Selection

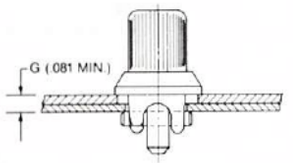

To Select Stud Dash Number.

1. Determine "G" thickness.

Note: Increase "G" to allow for thickness of paint or other finishes and for the compressed thickness of any gasket.

2. Stud dash number varies with stud series used. This information must be known before proceeding.

3. Locate "G" total thickness in the table below.

4. Then find the corresponding dash number in the column designated for the stud series used.

Stud Dash Number Selection		
G Total Thickness	For 36F Series	For 38F Series
.081-.130	-3	-4
.131-.180	-4	
.181-.260	—	

How to Order:

Example 1.
Stud Assembly Used: 36S01-[?]-1AA
"G" Total Thickness = .090 inch
Stud Dash Number From Table = -3
Completed Part Number: 36S01-3-1AA

Example 2.
Stud Assembly Used: 38S01-[?]-1AA
"G" Total Thickness = .120 inch
Stud Dash Number From Table = -4
Completed Part Number: 38S01-4-1AA

Stud Part Number Structure

36S05-[ ]-1AA

- Material and Finish
- Stud Dash Number (Based on Total Thickness, "G")
- Basic Part Number

Get quote
Angic Global Solutions 1-888-872-0690
https://www.AngicGlobal.com Sales@AngicGlobal.com

2600/2700 Series General Purpose 1/4-Turns.

A wide choice of general purpose studs and receptacles are available with this series. Certain 2600 and 2700 series 1/4-turn fasteners are qualified to MIL-F-5591* specifications. Also included are receptacles for fast installation, or for ultrasonic installation. Integral stud cup protects top panel surface from abrasion.

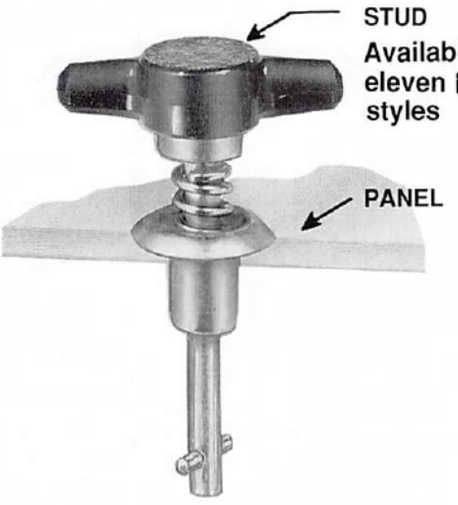

2600 Series.

Plus flush head styles and solid retaining rings.

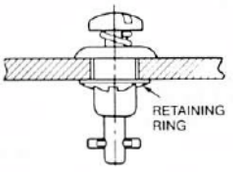



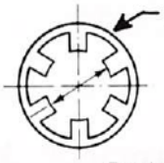

Retaining rings are used with stud lengths -5 and greater, except for snap-in versions which do not require retaining rings.

2700 Series.

Flush head styles and split retaining ring.

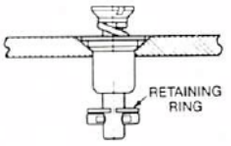

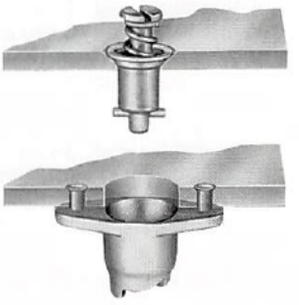

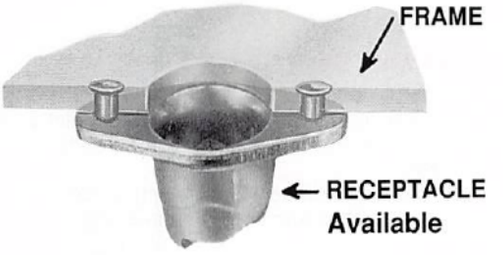

Specifications:
Ultimate tensile strength: 300 lbs.
Working strength: 200 lbs

*Meets the design, physical and performance requirements of MIL-F-5591. However, full mechanical properties testing may not be performed on each production lot.

Section Contents

	Page No.
2600 Series Studs	A-26 - A-27
2700 Series Studs	A-28
Retaining Rings	A-28
Receptacles	A-29 - A-32
Stud Panel Preparation and Installation Data	A-33
Receptacle and Retaining Ring Installation Data	A-34 - A-35

Get quote
Angic Global Solutions 1-888-872-0690
https://www.AngicGlobal.com Sales@AngicGlobal.com

Ordering Information

Note: Receptacles determine which stud is selected, therefore, an overview is included here.

To Select Stud Part Number.

1. Stud part number varies with receptacle used. **The receptacle must be chosen before selecting stud part number.** See receptacle detail on Pages A-27 through A-30.

2. Determine "G" thickness as shown in drawings below.

Standard Mount Receptacle | **Side Mount and Corner Mount Receptacles** | **Single Hole Mount Receptacle**

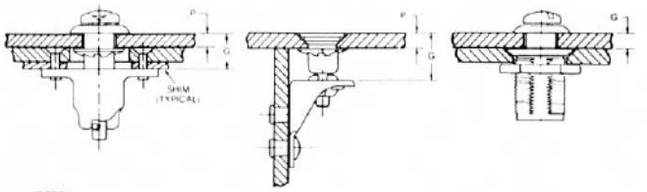

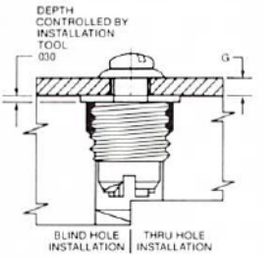

Important Note: If the total thickness "G" is very near the top of the thickness range, selection of the next greater dash number is recommended. For other materials and for "G" thickness greater than those tabulated, contact the Camloc Products Division.

Notes:

a) Increase "G" to allow for thickness of paint or other finishes and for the compressed thickness of any gasket.

b) "G" must be increased for the following "special" conditions:

"Special" Condition	Increase "G" Thickness
212-12B Series receptacles installed	Add .038 inch
Front mounting receptacle (P/N 26R41-1-1AA) installed	Allow .022 inch for receptacles top side protrusion
Rear mounting receptacle (P/N 26R45-1-1AA) installed	Allow .018 inch for receptacle top side protrusion
Clip-on receptacle (P/N 99R11) installed	Add .090 and subtract 7 dash numbers
Single hole mounting receptacle (P/Nos. 99R10 and 99E10)	Add .020 inch
KNQ2 Series. Keenserts installed	Add .030 inch

3. Locate "G" total thickness in the tables with each stud.

4. Then find the corresponding stud part number in the column designated for the selected receptacle.

Example 1.
Stud Assembly Used: 2700-[ ]
"G" Total Thickness = .275 inch
Receptacle Used: 212-12AD
Stud Dash Number From Table: -9
Complete Part Number: 2700-9

Example 2.
Stud Assembly Used: 2600-[ ]
"G" Total Thickness = .163 inch
Receptacle Used: 212-12BR
Required Calculation: "G" + .038 = .163 + .038 = .201
Stud Dash Number Selected From Table: -6
Compl

Stud Dash Number Selection

"G" Total Thickness	Receptacles		
	26R1 26R2	26R5 312-12	All Other P/N's Not Tabulated
.020-.029	—	—	—
.030-.059	- 2*	—	- 1*
.060-.079	—	—	—
.060-.089	- 3	—	- 2*
.080-.089	—	—	—
.090-.119	- 4	—	- 3
.120-.149	- 5	—	- 4
.150-.179	- 6	—	- 5
.180-.209	- 7	—	- 6
.210-.239	- 8	—	- 7
.240-.269	- 9	—	- 8
.270-.299	-10	—	- 9
.300-.329	-11	—	-10
.330-.359	-12	—	-11
.360-.389	-13	—	-12
.390-.419	-14	- 1*	-13
.420-.449	-15	- 2*	-14
.450-.479	-16	- 3	-15
.480-.509	-17	- 4	-16
.510-.539	-18	- 5	-17
.540-.569	-19	- 6	-18
.570-.599	-20	- 7	-19
.600-.629	-21	- 8	-20
.630-.659	-22	- 9	-21
.660-.689	-23	-10	-22
.690-.719	-24	-11	-23
.720-.749	-25	-12	-24
.750-.779	-26	-13	-25
.780-.809	-27	-14	-26
.810-.839	-28	-15	-27
.840-.869	-29	-16	-28
.870-.899	-30	-17	-29
.900-.929	-31	-18	-30
.930-.959	-32	-19	-31
.960-.989	-33	-20	-32
.990-1.019	-34	-21	-33
1.020-1.049	-35	-22	-34
1.050-1.079	-36	-23	-35
1.080-1.109	-37	-24	-36
1.110-1.139	-38	-25	-37
1.140-1.169	-39	-26	-38
1.170-1.199	-40	-27	-39
1.200-1.229	-41	-28	-40
1.230-1.259	-42	-29	-41
1.260-1.289	-43	-30	-42
1.290-1.319	-44	-31	-43
1.320-1.349	-45	-32	-44
1.350-1.379	-46	-33	-45
1.380-1.409	-47	-34	-46
1.410-1.439	-48	-35	-47
1.440-1.469	-49	-36	-48
1.470-1.499	-50	-37	-49
1.500-1.529	—	-38	-50
1.530-1.559	—	-39	—
1.560-1.589	—	-40	—
1.590-1.619	—	-41	—
1.620-1.649	—	-42	—
1.650-1.679	—	-43	—
1.680-1.709	—	-44	—
1.710-1.739	—	-45	—
1.740-1.769	—	-46	—
1.770-1.799	—	-47	—
1.800-1.829	—	-48	—
1.830-1.859	—	-49	—
1.860-1.889	—	-50	—

*2700 Series studs with -1 or -2 lengths require special part numbers; cont

Get quote
Angic Global Solutions 1-888-872-0690
https://www.AngicGlobal.com Sales@AngicGlobal.com

2600/2700 Series. General Purpose Stud Assemblies.

Features: • Wide variety of studs and receptacles offered as standards. • Integral stud cup protects top panel surface from abrasion. • Sealed versions available (not shown).

Note: Part numbers shown are basic part numbers only. See ordering information on Page A-23 for required dash numbers.

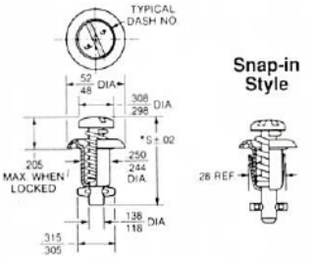

*S = .73 + (.03 x Dash No.)

Slotted Recess

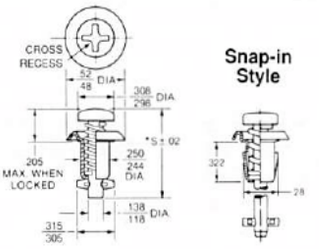

*S = .73 + (.03 x Dash No.)

Cross Recess

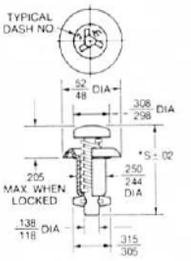

*S = .73 + (.03 x Dash No.)

Recess Style per NAS4000

Material	Part No.[1]	Part No.	Part No.	Part No.	Part No.
Stainless Steel	2600-[ ]S	–	26S51-[ ]	–	26S82-[ ]-3BB
Stainless Steel (Non-Magnetic)	26S26-[ ]	–	–	–	–
Steel (Cadmium Plated)	2600-[ ]	–	26S8-[ ]	–	26S82-[ ]-3AA
Steel (Cadmium Plated, Clear Chromate)	–	–	–	–	–
Steel (Nickel Plated)	26S42-[ ]	–	26S39-[ ]	–	–
Steel (Satin Black Enamel)	2600-[ ]B	–	26S8-[ ]B	–	–
Steel (Chrome Plated)	26S38-[ ]	–	–	–	–
Steel (Zinc Plated)	–	26S103-[•]-1AA	–	26S107-[•]-1AA	–
Steel (Black Phosphate Coated)	–	26S103-[•]-1AB	–	26S107-[•]-1AB	–
A286 CRES (Passivated)	–	–	26S51-[ ]B	–	–

*Stud lengths to -15.

2600 Studs continued

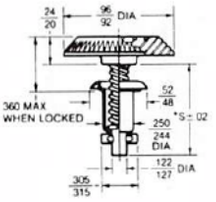

*S = .66 + (.03 x Dash No.)

Knurled Head

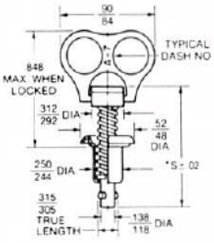

*S = .82 + (.03 x Dash No.)

Folding Wing

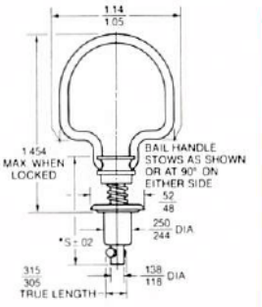

*S = .90 + (.03 x Dash No.)

Folding Bail Handle

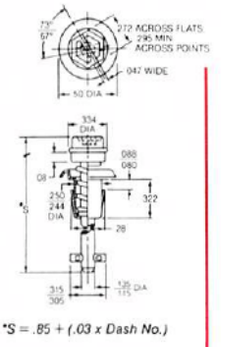

*S = .85 + (.03 x Dash No.)

External Hex Snap-In Style

Material	Part No.	Part No.	Part No.	Part No.
Stainless Steel	–	–	26S22-[ ]B	–
Steel (Cadmium Plated)	2600-[ ]KA	26S13-A-[ ]	26S22-[ ]	–
Steel (Cadmium Plated, Clear Chromate)	–	26S13-B-[ ]	–	–
Steel (Zinc Plated, Clear Chromate)	–	–	–	26S135-[•]-1AA

*Stud lengths to -15.

Notes: *1. For Beryllium Copper material specify Part No. 26S26-[ ]B.*
2. For Slotted Knob style in Steel (Cadmium Plated) use Part No. 26S34-[ ]D.

Maximum Service Temperatures: Stainless Steel—700°F.; Plastic Knobs—300°F.; all others—450°F.

Get quote
Angic Global Solutions 1-888-872-0690
https://www.AngicGlobal.com Sales@AngicGlobal.com

QUICK OPERATING 1/4-TURN FASTENERS 2600/2700 SERIES

Specifications:

Ultimate tensile strength: 300 lbs. Working strength: 200 lbs. Stud grip increments: .030 inch. For other styles, materials or finishes, please contact Camloc Products Division.

A

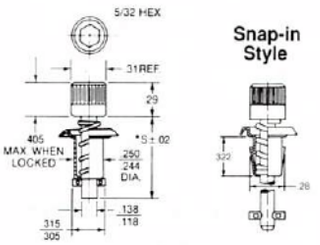

*S = .66 + (.03 x Dash No.)

Hex Socket

Part No.	Part No.
–	–
–	–
26S97-[ ]-1AA	–
–	–
–	–
–	–
–	–
–	26S108-[•]-1AA
–	26S108-[•]-1AB
–	–

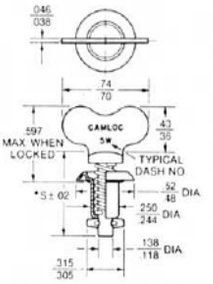

*S = .73 + (.03 x Dash No.)

Fixed Wing

Part No.
2600-[ ]SW
26S36-[ ]
2600-[ ]W
–
26S37-[ ]
–
–
–
–

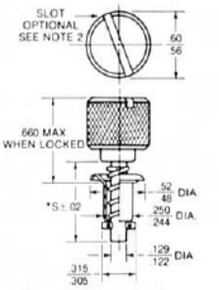

*S = .66 + (.03 x Dash No.)

Knurled Knob

Part No.
–
26S26-[ ]A
–
26S34-[ ]B
–
26S34-[ ]A
26S34-[ ]
–
–

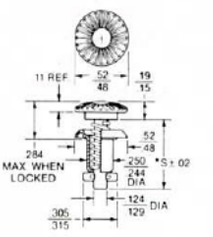

*S = .66 + (.03 x Dash No.)

Knurled Head

Part No.
–
–
2600-[ ]K
26S35-[ ]
26S40-[ ]
–
–
–
–

Plastic Knob Styles

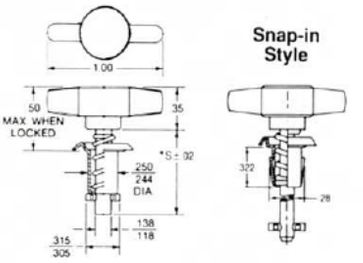

*S = .66 + (.03 x Dash No.)

T-Knob

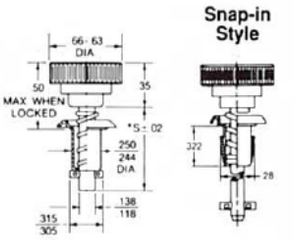

*S = .66 + (.03 x Dash No.)

Knurled Knob

Basic Part Nos.

	Shank Material: Steel (Zinc Plated)			
	Black	Red	Grey	Beige
T-Knob	26S98-[ ]-1DA	26S98-[ ]-1DB	26S98-[ ]-1DC	26S98-[•]-1DD
T-Knob (Snap-In)	26S109-[•]-1AA	26S109-[•]-1AB	26S109-[•]-1AC	26S109-[•]-1AD
Knurled Knob	26S99-[ ]-1DA	26S99-[ ]-1DB	26S99-[ ]-1DC	–
Knurled Knob (Snap-In)	26S110-[•]-1AA	26S110-[•]-1AB	26S110-[•]-1AC	–

*Stud lengths to -15.

ANGIC GLOBAL SOLUTIONS
Get quote
Angic Global Solutions 1-888-872-0690
https://www.AngicGlobal.com Sales@AngicGlobal.com

2600/2700 Series. General Purpose Stud Assemblies.

Note: Part numbers shown are basic part numbers only. See ordering information on Page A-23 for required dash numbers.

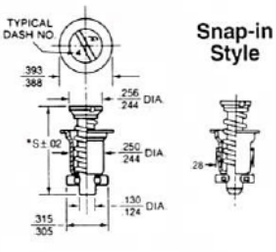

*S = .58 + (.03 x Dash No.)

Slotted Recess

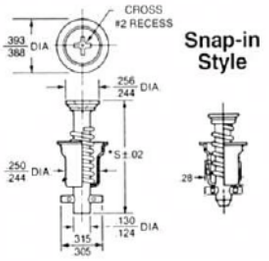

*S = .58 + (.03 x Dash No.)

Cross Recess

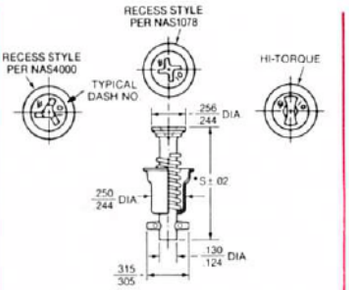

*S = .58 + (.03 x Dash No.)

"Tamper Resistant" Recesses

Material	Part No.	Part No.	Part No.	Part No.	Part No.
Stainless Steel	2700-[ ]S	–	–	–	–
Steel (Cadmium Plated)	2700-[ ]	27S17-[•]-1AC	27S3-[ ]	27S18-[•]-1AC	27S8-[ ]-1AA Per NAS1078
	–	–	–	–	27S8-[ ]-3AA Per NAS4000
	–	–	–	–	27S8-[ ]-4AA Hi-Torque Recess
Steel (Satin Black Enamel)	2700-[ ]A	–	27S3-[ ]A	–	–
Steel (Chrome Plated)	2700-[ ]B	27S17-[•]-1AB	–	27S18-[•]-1AB	–
Beryllium Copper (Non-Magnetic)	27S12-[ ]-1BB	–	–	–	–
Steel (Zinc Plated)	–	27S17-[•]-1AA	–	27S18-[•]-1AA	–

Maximum Service Temperatures: Stainless Steel—700° F; Steel and Beryllium Copper—450° F.

Retaining Rings (for 2600/2700 Series)

Solid rings are used to hold stud assemblies stationary to the top panel.

Split ring allows stud assemblies to move freely within the top panel.

Notes: 1. Order separately.
2. Retaining rings are required for stud length dash numbers "5" and greater.
3. Studs with smaller dash numbers are self-captivating and retaining rings are not used.
4. Please see page A-33 for installation procedures for split rings.

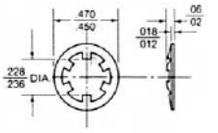

Solid Ring General Purpose

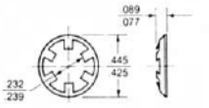

Solid Ring Required For Use With Dimpled Panels (2700 Series Stud Assembly)

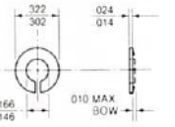

Split Ring General Purpose

Material (Finish)	Solid Ring General Purpose	Solid Ring Required For Use With Dimpled Panels (2700 Series Stud Assembly)	Split Ring General Purpose
Stainless Steel	2600-LW-7	–	2600-SW
Steel (Cadmium) Electro Plated	2600-LW*	27S5-1	2600-SW2
Steel (Cadmium) Mechanical Plated	2600-LWM	27S5-1M	–
Steel (Zinc) Electro Plated	99W10-01A1*	–	99W11-01A1
Steel (Zinc) Mechanical Plated	99W10-01M1	–	–
Weight per 100 pieces	0.04 lbs.	0.04lbs.	0.03 lbs.
Installation Tool Required	T98-1	T98-1	Use needle nose pliers For more information see Page A-33

*Not recommended for use with Stud Ejector Springs. Use 2600-SW.
Maximum Service Temperatures: Stainless Steel—700°F.; all others—450°F.*

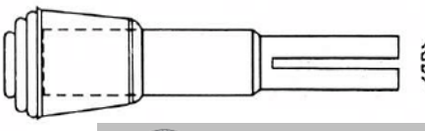

Retaining Ring Installation Tool T98-1
(For use with Solid Rings Only)

ANGIC GLOBAL SOLUTIONS
Get quote
Angic Global Solutions 1-888-872-0690
https://www.AngicGlobal.com Sales@AngicGlobal.com

QUICK OPERATING 1/4-TURN FASTENERS 2600/2700 SERIES

Stud Ejector Springs

Provides full retraction of stud assembly to allow opening and closing of equipment without the possibility of jamming or damage. Select the ejector spring corresponding to stud assembly series selected. See table for part numbers.

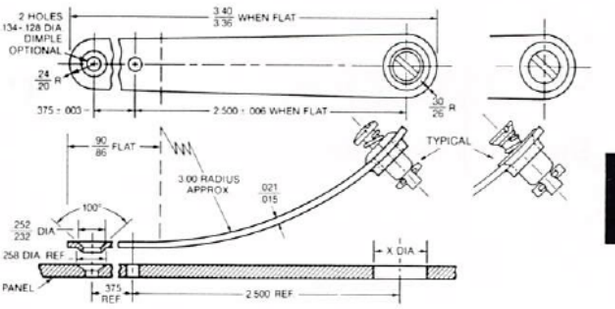

	Use with 2600 Series Stud Assemblies	Use with 2700 Series Stud Assemblies
"X" Diameter	.438 (Ref.)	.500 (Ref.)
Plain Rivet Holes	2600-ES	—
Dimpled Rivet Holes	2600-ESD	2700-ESD
Weight per 100 pieces	0.831 lbs.	0.941 lbs.
Material and Finish	Spring Steel (Cadmium plated gold chromate)	
Maximum Service Temperature	450°F.	450°F.

Notes: *1. Thru hole in Ejector Spring Part Number 2700-ESD is formed to allow 2700 Series Stud Assemblies to seat flush to top surface of Ejector Spring.*
2. Add .018 to total "G" thickness when using these parts.

Receptacles for Fast Installation

Front Mounting Version

Part Number: 26R41-1-1AA

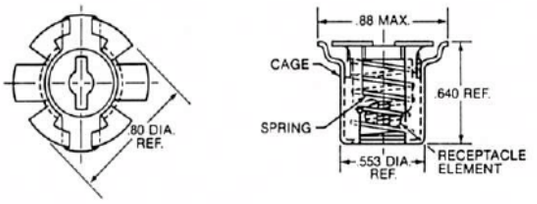

Rear Mounting Version

Part Number: 26R45-1-1AA

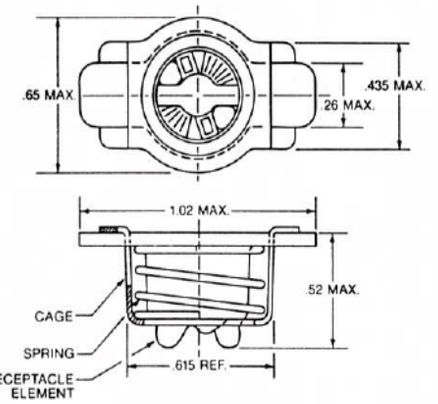

MATERIAL: cage: carbon steel, (zinc plated); receptacle element: zinc diecasting, (zinc plated).

Clip-on Version

Part Number: 99R11-1-1AA

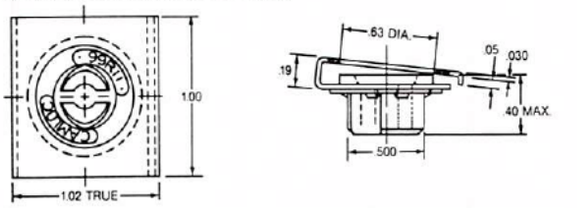

MATERIAL: carbon steel clip (zinc plated); zinc alloy insert (zinc plated); steel retaining ring.

Ultrasonically Installed Version

Installs into Thermoplastics.

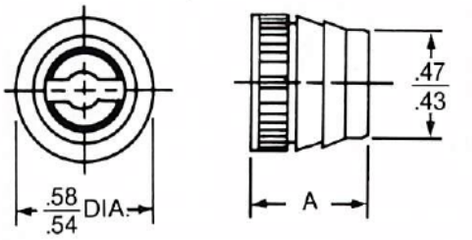

MATERIAL: zinc alloy (zinc plated).

STYLE	PART NO.	A DIM.
LONG	26R48-1-1AA	.500
SHORT	26R48-2-1AA	.300

Note: *When selecting studs for short version (26R48-2-1AA) receptacle, subtract .200 in. from total grip.*

Get quote
Angic Global Solutions 1-888-872-0690
https://www.AngicGlobal.com Sales@AngicGlobal.com

Receptacles. (For use with 2600/2700 and 26F Series Stud Assemblies).

Standard Mounting Versions

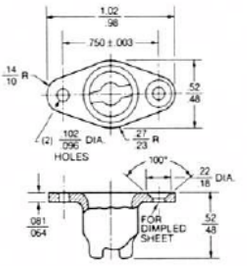

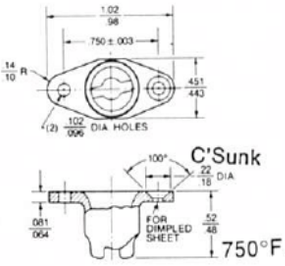

Narrow Width

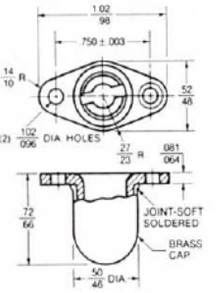

Encapsulated
See Note 1 For Sealing

Material	Part No.	Max. Temp.	Rivet Holes	Weight (per 100 pcs.) (lbs.)	Part No.	Max. Temp.	Rivet Holes	Weight (per 100 pcs.) (lbs.)	Part No.	Max. Temp.	Rivet Holes	Weight (per 100 pcs.) (lbs.)
Stainless Steel (Non-Mag — Passivated)	212-12S	750°F.	Plain	1.05	—	—	—	—	26R18-1	750°F.	Plain	1.63
	212-12SD	750°F.	C'Sunk	1.00	—	—	—	—	26R18-2	750°F.	C'Sunk	1.63
Silicon Bronze (Cadmium Plated)	212-12	450°F.	Plain	1.21	212-12N	450°F.	Plain	1.17	26R16-1	300°F.	Plain	1.63
	212-12D	450°F.	C'Sunk	1.16	212-12ND	450°F.	C'Sunk	1.12	26R16-2	300°F.	C'Sunk	1.63
Silicon Bronze (Nickel Plated)	212-29	450°F.	Plain	1.21	—	—	—	—	—	—	—	—
Zinc (Zinc Plated)	212-12E	300°F.	Plain	1.21	—	—	—	—	—	—	—	—
Aluminum Alloy (Anodized)	212-12A	350°F.	Plain	.40	—	—	—	—	—	—	—	—
	212-12AD	350°F.	C'Sunk	.38	—	—	—	—	—	—	—	—
Aluminum Alloy (Hard Anodized)	212-12A-H	350°F.	Plain	.40	—	—	—	—	—	—	—	—

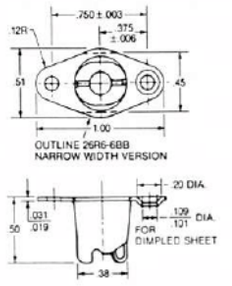

Weight per 100 pcs.: 0.50 lbs.

Lightweight

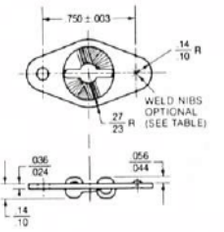

Weight per 100 pcs.: 0.23 lbs.

Low Profile
Restricted usage (see Note 2)

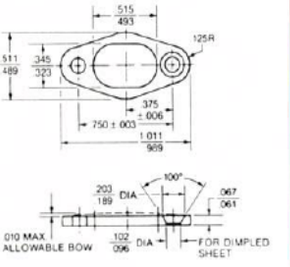

Weight per 100 pcs.: 0.11 lbs.

Shims

Material	Part No.	Max. Temp.	Rivet Holes	Part No.	Max. Temp.	Rivet Holes	Part No.	Max. Temp.	Rivet Holes
Stainless Steel	—	—	—	312-12A	750°F.	Plain .134/.128 dia.	—	—	—
	—	—	—	312-12S	750°F.	Plain .102/.096 dia.	—	—	—
	—	—	—	312-12WS	750°F.	None (Weld Nibs)	—	—	—
Steel (Cadmium Plated)	26R6-1BB	450°F.	Plain	312-12	450°F.	Plain .102/.096 dia.	—	—	—
	26R6-4BB	450°F.	C'Sunk	—	—	—	—	—	—
	26R6-6BB (Narrow Width)	450°F.	Plain	—	—	—	—	—	—
Aluminum Alloy (Anodized)	—	—	—	—	—	—	26R8-1	350°F.	Plain
	—	—	—	—	—	—	26R8-2	350°F.	C'Sunk

Notes: *1. Encapsulated receptacle may be sealed against air, water, and dust by using 3M brand EC847 or a silicon adhesive sealant.*
2. Use of 312-12 low profile receptacles is restricted to applications with total "G" thickness of .390 inch and greater. Please see illustration Page A-23 for definition of "G."

Get quote
Angic Global Solutions 1-888-872-0690
https://www.AngicGlobal.com Sales@AngicGlobal.com

A

Receptacles (continued)

Side Mounting Versions

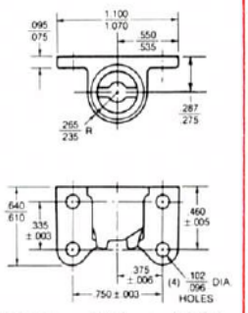

Weight per 100 pcs.: 0.66 lbs.

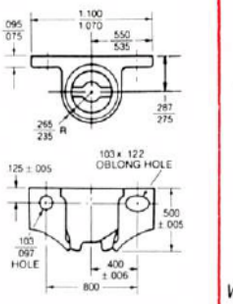

Weight per 100 pcs.: 0.56 lbs.

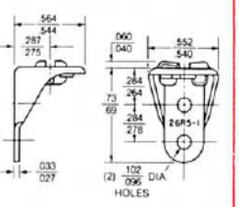

Weight per 100 pcs.: 0.45 lbs.

Lightweight

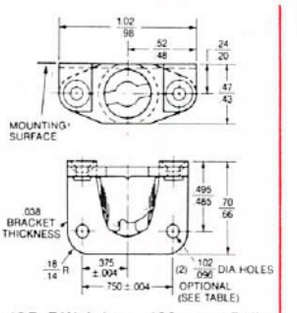

-12B-R Weight per 100 pcs.: 1.74 lbs.
-12B Weight per 100 pcs.: 1.76 lbs.

Material	Part No.	Max. Temp.	Part No.	Max. Temp.	Part No.	Max. Temp.	Part No.	Max. Temp.
Steel (Cadmium Plated)	–	–	–	–	26R5-1	450°F.	–	–
Receptacle Element: Silicon Bronze Bracket: Stainless Steel	–	–	–	–	–	–	212-12B-R	450°F.
							212-12B For Welding Attachment (no rivet holes)	450°F.
Aluminum Alloy (Anodized)	26R1-1	350°F.	–	–	–	–	–	–
Aluminum Alloy (Hard Anodized)	26R1-5	350°F.	26R3-1	350°F.	–	–	–	–

Corner Mounting Versions

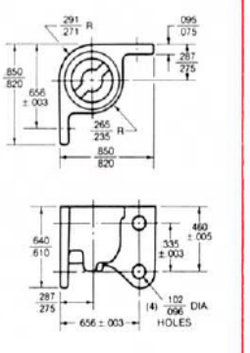

Weight per 100 pcs.: 0.75 lbs.

Material	Part No.	Max. Temp.
Aluminum Alloy (Anodized)	26R2-1	350°F.
Aluminum Alloy (Hard Anodized)	26R2-5	350°F.

Floating Version

(Float = ±.030)

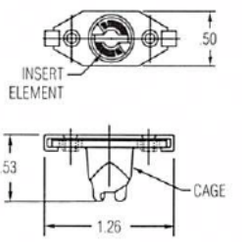

Material	Part No.	Max. Temp.
Insert Element: CRES per ASTM A167 Cage: CRES per ASTM A743	26R51-1-1AA	–

Get quote
Angic Global Solutions 1-888-872-0690
https://www.AngicGlobal.com Sales@AngicGlobal.com

Special Purpose Receptacles

KEENSERTS® Insert

For use in aluminum and magnesium castings and other thick materials.

Installation:

Drill, counterbore, and then tap thread in structure using data from table below. Turn KEENSERTS Insert into tapped hole using installation tool P/N TQ-2A for positive depth control. Drive locking kees down into the tapped threads of the structure using tool P/N TQ-2B. This provides a positive mechanical lock against rotation.

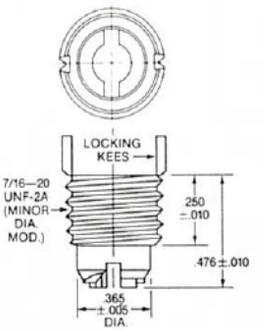

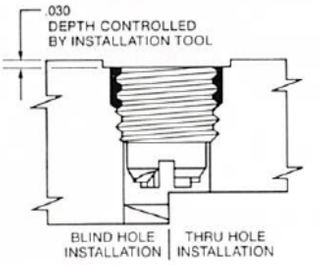

Installation Data

Part Numbers		Tap Drill Dia.	Tap Drill Depth Min.	C'Bore Dimensions	Tap Size	Min. Full Thread Depth	Install Tools	Removal Data	
Stainless Steel	Steel							Drill Size	Drill Depth
KNQ-2S	—	.410 .405	.657	.500 Dia. x .055-.035 Depth	7/16-20 UNF-2B	.30	TQ-2A and TQ-2B	11/32	5/32
—	KNQ-2								

Removal: In the unlikely event it becomes necessary to remove the KEENSERT Insert, simply drill to the indicated depth, deflect the locking kees inward and break them off. Then remove insert with an E-Z out type tool. An identical insert can now be installed in the original hole without rework.

Single Hole Mounting Receptacles

Designed to allow mounting in dimpled or drilled and countersink holes. Can also be installed in tapped holes. Blind end version is ideal when receptacle is to be used with structural foams.

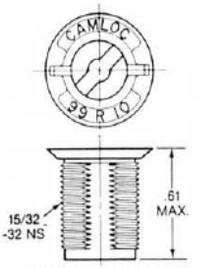

RECEPTACLE

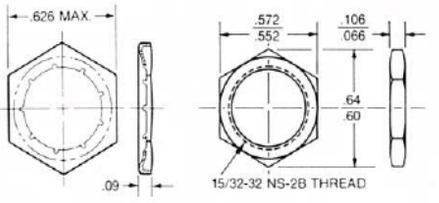

RETAINER NUTS

	Part Number	Material/ Finish	Max. Temp.	Weight (per 100 pcs.) (lbs.)
Receptacles	99R10-01A1	Zinc with Zinc Plating	300°F.	1.04
	99E10-01 Encapsulated Version		300°F.	1.10
Nuts	99N10-01A1 Sheet Metal Version	Steel (Zinc Plated, Clear Chromate)	300°F.	0.13
	15R10-1AC Solid Version	Steel (Cadmium Plated, Clear Chromate)	300°F.	0.23

Installation Options

Drilled Panel

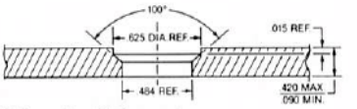

Dimpled Panel

Drill .406 Dia. hole, then form to shape illustrated.

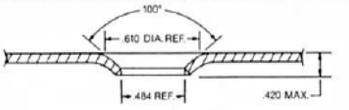

Optional Hole Shapes

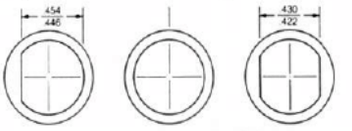

Notes: 1. *"D" and double "D" shaped holes provide a positive stop against rotation.*
2. *When using round mounting holes, retainer nut must be securely tightened to prevent rotation of receptacles.*

Threaded Installation

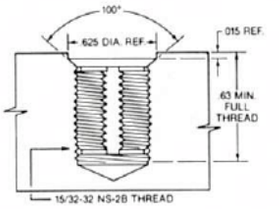

Typical Installation

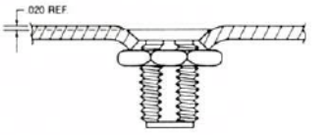

Get quote
Angic Global Solutions 1-888-872-0690
https://www.AngicGlobal.com Sales@AngicGlobal.com

QUICK OPERATING 1/4-TURN FASTENERS 2600/2700 SERIES

Panel Preparation and Installation Data

2600 Series Protruding Head Studs

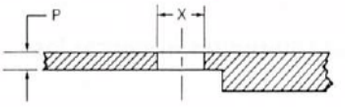

Determine panel thickness "P" and form through hole to corresponding "X" diameter. Note: Panels with thicknesses greater than .125 inch must be back counterbored to a concentric .375 inch diameter with a remaining maximum material thickness of .125 inch. Use split style retaining rings with back counterbore.

P	X Dia. Ref.
.030 to .065	.257
.066 to .125	.281

Float:

To provide float for stud assembly, increase "X" diameter to .312 inch. This hole diameter allows "P" thickness to be increased to .187 inch without back counterboring. Larger hole requires use of solid retaining ring, P/N 2600-LW.

2600/2700 Series Snap-in Studs

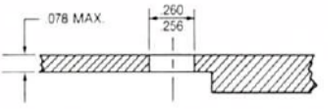

Form through hole to .260-.256 diameter. Note: Panels with panel thicknesses greater than .078 must be back counterbored to a concentric .375" diameter with a remaining maximum material thickness of .078.

2700 Series Flush Mounting Studs

Installation in "Thin" Panel

For panel thicknesses "P" up to .072 inch maximum, form through hole to .213 diameter. Then dimple using tools shown below. Through hole after dimpling to be .257; ream if necessary.

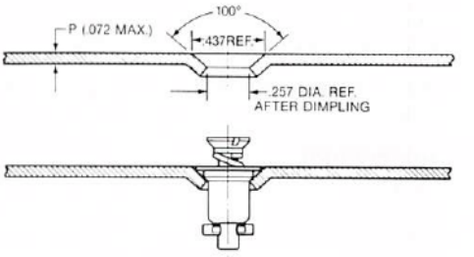

Stud Assembly Seats Flush

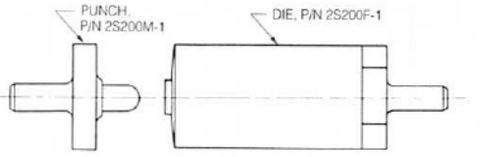

Dimpling Tool Both Punch and Die Required

Installation in "Thick" Panel

For panel thickness "P" larger than .072 inch, form through hole to .257 diameter and 100° C'Sink to a diameter of .437.

Panels with thicknesses greater than .140 inch must be back counterbored to a concentric .375 inch diameter with a remaining material thickness of .140 inch maximum.

Use split style retaining ring with back counterbore.

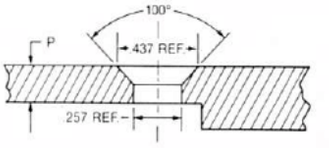

Installing Stud Into Panel

Compress stud assembly spring using Camloc pliers, P/N 4P3, as shown.
Insert stud into panel and release when cross pin clears panel.

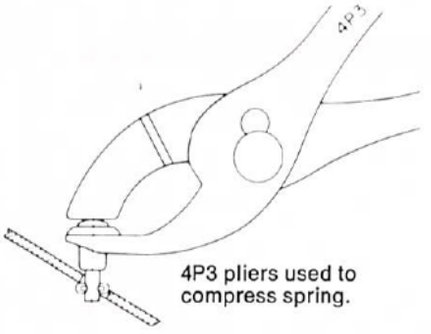

4P3 pliers used to compress spring.

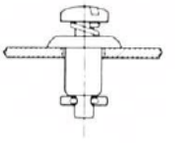

Dash "4" studs and smaller are self-captivating. (Except 26S97, 26S98 and 26S99)

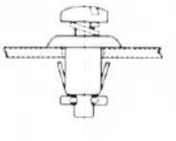

Place stud assembly on hole and push down to snap in place.

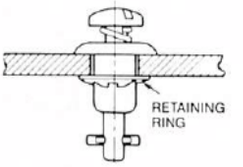

2600 Series Protruding stud and solid retaining ring. Installed with T-98-1 tool.

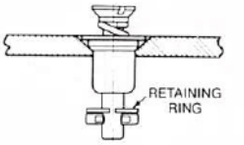

2700 Series Flush mounting stud and split retaining ring.

Typical Installations

Note: If float is required, all dash lengths require retaining rings as described in "Float" above.

ANGIC
Get quote
Angic Global Solutions 1-888-872-0690
https://www.AngicGlobal.com Sales@AngicGlobal.com

QUICK OPERATING 1/4-TURN FASTENERS 2600/2700 SERIES

Receptacle Installation Data

Standard Mounting Versions

1. Drill #30 (.1285) dia. pilot hole.
2. Drill holes for .093 dia. rivets using drill jig P/N T12 or equivalent.
3. Enlarge pilot hole to X diameter and countersink if required.
4. Rivet receptacle in place.

Important Note: 1100F aluminum alloy rivets should be used with aluminum receptacles.

Typical Installation

(Thin panels may be dimpled)

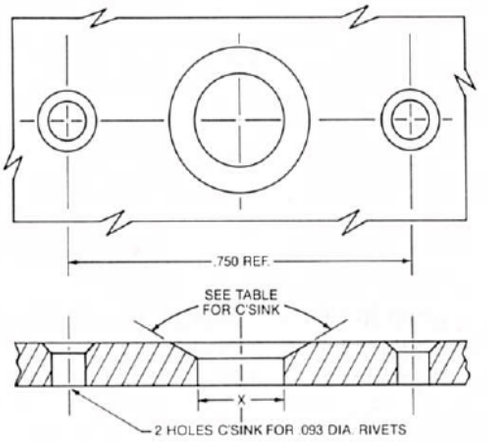

Receptacle	"X" Dia.	C'Sink	Hole Saw*
Encapsulated P/N's 26R16-1, 26R16-2	.437	90° x 500 Dia.	HS-437
All Other Standard Mount Receptacles	.500	None Required	HS-500 or HS-500D

**Hole Saws are available as a convenience in selected sizes.*

Drill Jig T12

Provides convenient means for accurately locating rivet holes with .750 inch spacing relative to stud mounting hole.

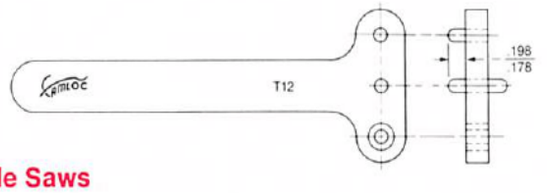

Hole Saws

Accurately sizes mounting holes.
Available with either a smooth or drill bit pilot.

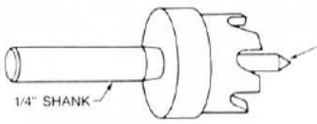

Not to scale

1/8" Dia. Pilot

(Drill bit pilot optional. Specify HS-500D.)

Side Mounting Versions

26R1 and 26R3 Aluminum Receptacles

Important Note: 1100F aluminum alloy rivets should be used with aluminum receptacles.

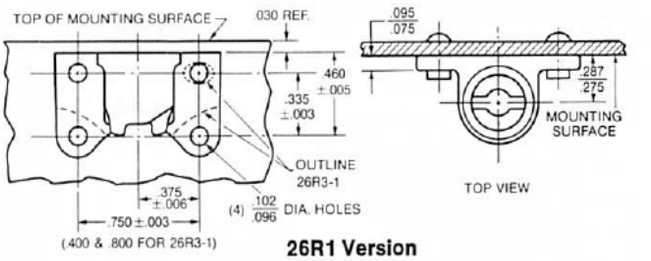

26R1 Version

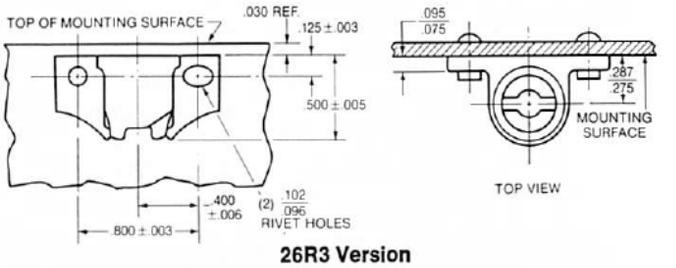

26R3 Version

26R5 Lightweight Receptacle

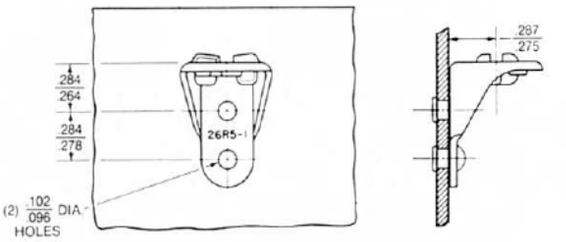

212-12B Silicon Bronze Receptacles

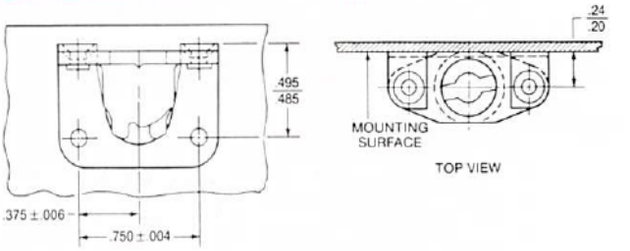

26R2 Aluminum Corner Mounting Receptacle

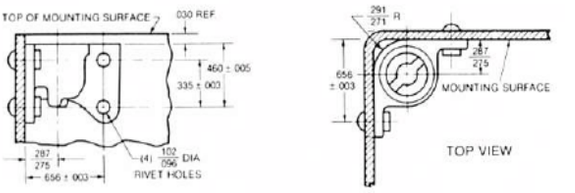

Important Note: 1100F aluminum alloy rivets should be used with aluminum receptacles.

Get quote

Angic Global Solutions 1-888-872-0690
https://www.AngicGlobal.com Sales@AngicGlobal.com

QUICK OPERATING 1/4-TURN FASTENERS 2600/2700 SERIES

Front Mount Version

Part Number 26R41-1-1AA

No riveting or special tools required.

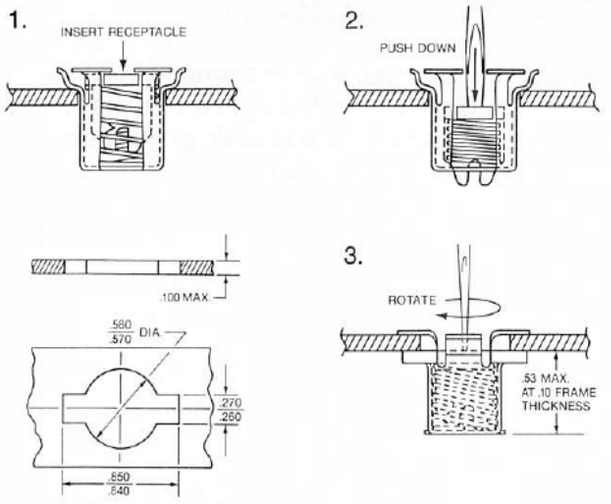

HOLE PREPARATION

Rear Mount Version

Part Number 26R45-1-1AA

No riveting or special tools required.

Rear mounting receptacle snaps in place.

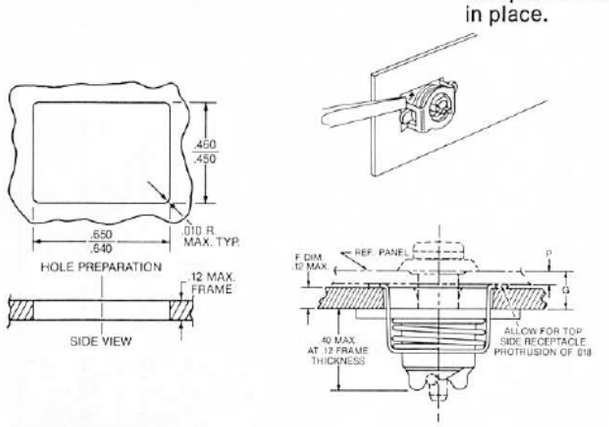

Clip-on Version

Part Number 99R11-1-1AA

Designed to clip-on .060 thick x .900 wide inner frame. Add .090 to panel thickness used to determine total grip, "G" select stud dash number, then subtract seven dash numbers.

Requires .438 diameter installation hole.

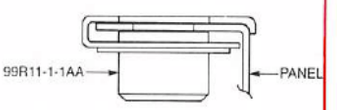

HOLE PREPARATION

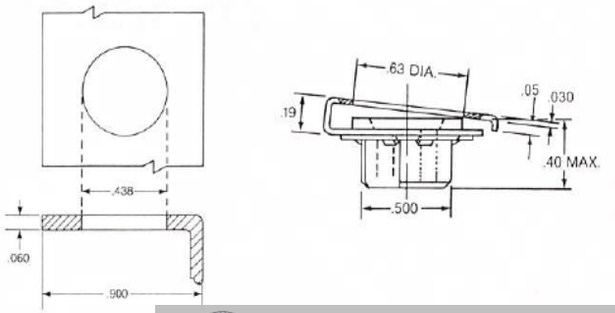

Ultrasonically Installed Versions

Part Number 26R48-1-1AA/26R48-2-1AA

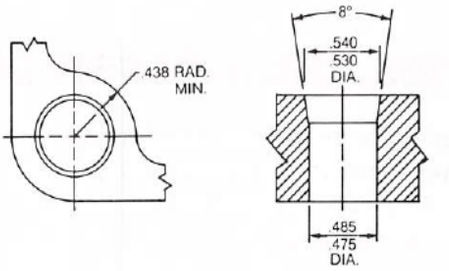

Recommended hole preparation for polyphenylene oxide structural foam noryl FN-215 (see note 1)

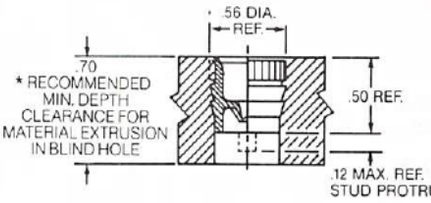

*.470 min. depth for 26R48-2-1AA short version

Notes:

1. To be used as a guide only. To obtain optimum performance, final hole size should be determined for particular application.

2. See Page A-23 for "G" total thickness for stud length selection. When using 2600-LW or 99W10 type solid ring retainers, a .018 inch gap between panel and frame will occur. Increase "G" total thickness by .018 inch. To eliminate gap, refer to table for options.

To Eliminate Gap	Increase "G" Thickness
Mold or drill a counterbore into frame, .590 inch min. diameter by .020 inch deep, and install receptacle to this depth.*	Add .020 inch.
Counterbore underside of panel .475 inch min. diameter by .020 inch deep.	No increase required.

*Welding horn must be $\frac{.590}{.560}$ diameter.

Retaining Ring Installation

1. To install, place retaining ring on stud with slot aligned over left side of cross pin as shown on figure 1.

2. Snap retaining ring under cross pin using needle nose pliers, then rotate retaining ring 180° until ring is over right side of cross pin as shown on figures 2 and 3.

3. To complete installation, snap retaining ring over the right side of cross pin.

4. Completed installation is shown in figure 4.

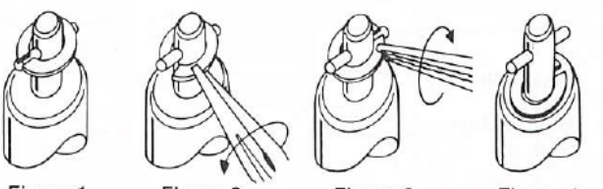

Figure 1 Figure 2 Figure 3 Figure 4

Retaining Ring Installation Tool T98-1

(For use with Solid Rings Only)

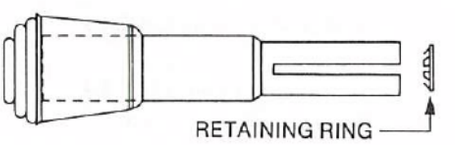

A

ANGIC
Get quote
Angic Global Solutions 1-888-872-0690
https://www.AngicGlobal.com Sales@AngicGlobal.com

28F Series. Stud Assemblies and Receptacles

Features: Designed for decorative styling. • Clip-on receptacle provides high assembly rates. • Receptacles have low profile for minimum interior projection.

Specifications: Ultimate tensile strength: 300 lbs. Working strength: 200 lbs. Stud grip increments: .030 inch. For other styles, materials or finishes, contact Camloc Products Division.

Stud Assemblies

Note: Part numbers shown are basic part numbers only. See ordering information on Page A-36 for required dash numbers.

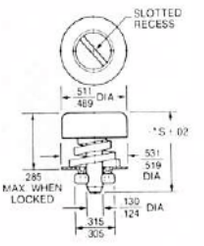

*S = .45 + (.03 x Dash No.)

Slotted Recess

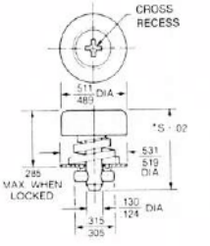

*S = .45 + (.03 x Dash No.)

Cross Recess

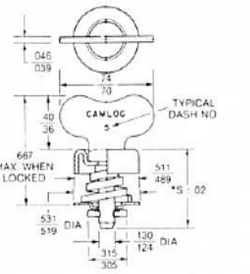

*S = .45 + (.03 x Dash No.)

Fixed Wing

Material	Part No.	Part No.	Part No.
Stainless Steel	28S11-[ ]	—	28S7-[ ]A
Steel (Cadmium Plated)	28S1-[ ]	28S14-[ ]	28S7-[ ]
Steel (Nickel Plated)	28S20-[ ]	28S19-[ ]	—

Maximum Service Temperatures: Stainless Steel—750° F.; Steel (Cadmium Plated)—450° F.; Steel (Nickel Plated)—550° F.

Receptacles

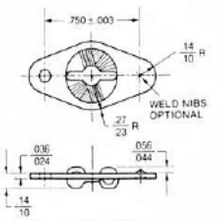

Low Profile, Standard Mounting
Weight per 100 pcs.: 0.23 lbs.

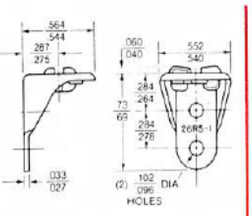

Side Mounting, Lightweight
Weight per 100 pcs.: 0.45 lbs.

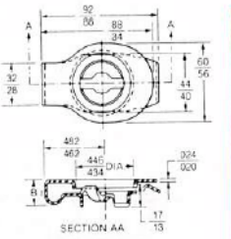

Clip-on Type
Weight per 100 pcs.: 0.42 lbs.

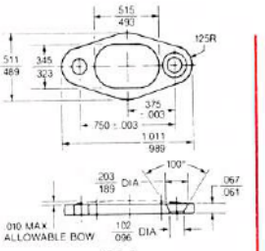

Shims
Weight per 100 pcs.: 0.12 lbs.

Material	Part No.	Max. Temp.	Rivet Holes	Part No.	Max. Temp.	Part No.	Max. Temp.	Part No.	Max. Temp.	Rivet Holes
Stainless Steel	312-12A	750°F.	Plain .134/.128 dia.	—	—	—	—	—	—	—
	312-12S	750°F.	Plain .102/.096 dia.	—	—	—	—	—	—	—
	312-12WS	750°F.	None (Weld Nibs)	—	—	—	—	—	—	—
Steel (Cadmium Plated)	312-12	450°F.	Plain .102/.096 dia.	26R5-1	450°F.	28R1-1AA* 28R1-2AA**	450°F. 450°F.	—	—	—
Aluminum Alloy (Anodized)	—	—	—	—	—	—	—	26R8-1	350°F.	Plain
	—	—	—	—	—	—	—	26R8-2	350°F.	C'Sunk†

*B Max. = .186
**B Max. = .201

†Use with dimpled rivet holes.

Retaining Ring.

Order separately.

See page A-58 for installation

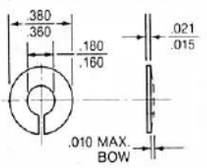

Part No.	Material	Maximum Service Temperature
28S10-1	Stainless Steel	750°F.
28S10-2	Steel (Cadmium Plated)	450°F.

Weight per 100 pcs.: .04 lbs.

Get quote
Angic Global Solutions 1-888-872-0690
https://www.AngicGlobal.com Sales@AngicGlobal.com

28F Series. Panel Preparation and Installation Data.

Determine panel thickness "P" and form through hole to corresponding "X" diameter.

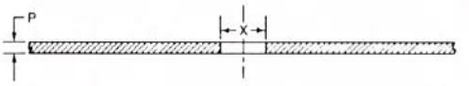

"P" panel thickness	"X" dia.
Up to .091	.257
.092 and greater	.312

Installing stud into panel:

Tilt stud and insert into panel as shown. It may be necessary to compress spring by pressing stud assembly against panel. When cross pin clears, center stud assembly in mounting hole and release. (To remove stud assembly reverse procedure.)

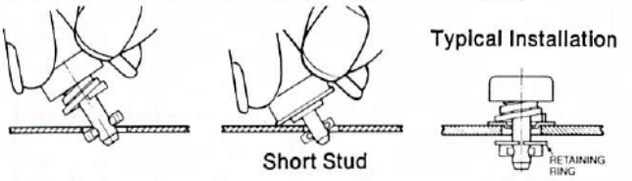

Note: *Retaining ring is required for all studs used with .312 inch mounting holes. For .257 inch mounting holes, retaining rings may be omitted where:* $P \geq (.030 \cdot N) - .100$ *P = Panel thickness N = Stud length dash number*

Stud Ejector Spring

Provides full retraction of stud assembly to allow opening and closing of equipment without the possibility of jamming or damage.

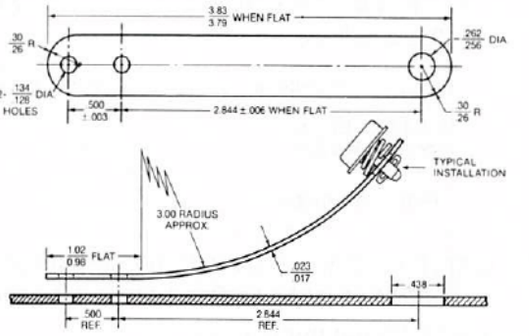

Part No.	Material and Finish	Max. Temp.
2600-E2S	Spring Steel (Cad. Plated)	450°F.

Note: *Add .020 to total "G" thickness when using this part. See page A-36 Weight per 100 pcs.: 1.24 lbs.*

28F Series. Receptacle Installation.

312-12 Series. Standard Mounting

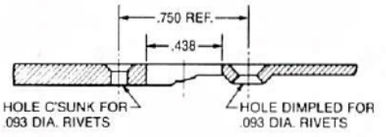

1. Drill #30 (.1285) diameter pilot hole.
2. Drill holes for .093 diameter rivets using drill jig P/N T12.
3. Enlarge pilot hole to .438 diameter using hole saw HS-437.
4. Rivet receptacle in place.

28R Series. Clip-on Receptacle

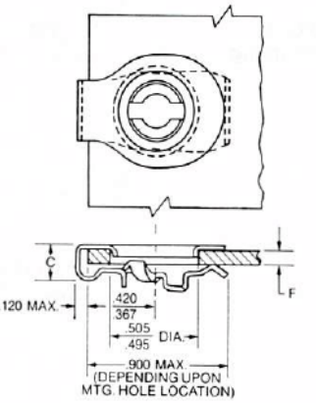

Part No.	F Panel Thickness	C Max.
28R1-1AA	.020-.064	.186
28R1-2AA	.065-.109	.201

Note: *Form .505-.495 mounting hole, then slide receptacle over mounting hole to clip in place.*

P/N 26R5 Series. Side Mounting Receptacle

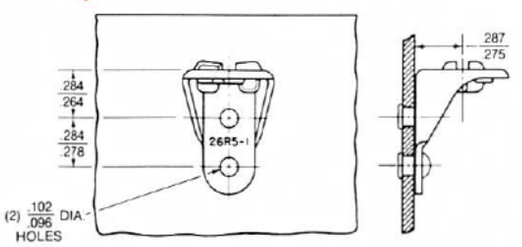

Get quote
Angic Global Solutions 1-888-872-0690
https://www.AngicGlobal.com Sales@AngicGlobal.com

28F Series. Ordering Information.

To Select Stud Dash Number.

1. Determine "G" thickness as shown below.

Notes: a) Increase "G" to allow for thickness of paint or other finishes and for the compressed thickness of any gasket.

b) "G" must be increased for the following "special" conditions:

"Special" Condition	Increase "G" Thickness
2600-E2S Ejector Spring installed	Add .020 inch
26R8 shims installed	Add .067 inch for each shim used

2. Stud dash number varies with receptacle used. This information must be known before proceeding.
3. Locate "G" total thickness in the table.
4. Then find the corresponding stud dash number in the column designated for the selected receptacle.

Important Note: If the total thickness "G" is very near the top of the thickness range, selection of the next greater dash number is recommended. For "G" thicknesses greater than those tabulated, contact Camloc Products Division.

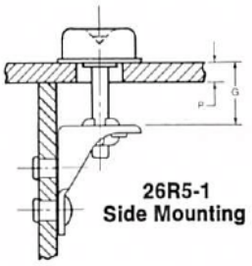

26R5-1 Side Mounting

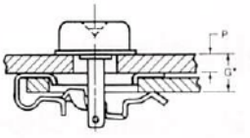

*(*Allow .024 inch for receptacle protrusion)*

28R Series Clip-on Version

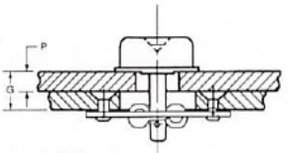

312-12 Series Low Profile

Stud Dash Number Selection			
"G" Total Thickness	Receptacles		
	26R5	28R1	312-12
.029-.059	—	- 3	—
.060-.089	—	- 4	—
.080-.089	- 2	—	- 2
.090-.119	- 3	- 5	- 3
.120-.149	- 4	- 6	- 4
.150-.179	- 5	- 7	- 5
.180-.209	- 6	- 8	- 6
.210-.239	- 7	- 9	- 7
.240-.269	- 8	-10	- 8
.270-.299	- 9	-11	- 9
.300-.329	-10	-12	-10
.330-.359	-11	-13	-11
.360-.389	-12	-14	-12
.390-.419	-13	-15	-13
.420-.449	-14	-16	-14
.450-.479	-15	-17	-15
.480-.509	-16	-18	-16
.510-.539	-17	-19	-17
.540-.569	-18	-20	-18
.570-.599	-19	-21	-19
.600-.629	-20	-22	-20
.630-.659	-21	-23	-21
.660-.689	-22	-24	-22
.690-.719	-23	-25	-23
.720-.749	-24	-26	-24
.750-.779	-25	-27	-25
.780-.809	-26	-28	-26
.810-.839	-27	-29	-27
.840-.869	-28	-30	-28
.870-.899	-29	-31	-29
.900-.929	-30	-32	-30
.930-.959	-31	-33	-31
.960-.989	-32	-34	-32
.990-1.019	-33	-35	-33
1.020-1.049	-34	-36	-34
1.050-1.079	-35	-37	-35
1.080-1.109	-36	-38	-36
1.110-1.139	-37	-39	-37
1.140-1.169	-38	-40	-38
1.170-1.199	-39	-41	-39
1.200-1.229	-40	-42	-40
1.230-1.259	-41	-43	-41
1.260-1.289	-42	-44	-42
1.290-1.319	-43	-45	-43
1.320-1.349	-44	-46	-44
1.350-1.379	-45	-47	-45
1.380-1.409	-46	-48	-46
1.410-1.439	-47	-49	-47
1.440-1.469	-48	-50	-48
1.470-1.499	-49	-51	-49
1.500-1.529	-50	-52	-50

Get quote

Angic Global Solutions 1-888-872-0690
https://www.AngicGlobal.com Sales@AngicGlobal.com

50F Series. General Purpose Stud Assemblies and Receptacles

Features: Designed for use in agricultural, industrial, and similar environments where a simplified rugged design is desired. • Studs are retained with a snap-in grommet or with optional retaining ring.

• Receptacles install without rivets or special tools.
• Significantly improves assembly rates to provide lower installed costs.

Note: Part numbers shown are basic part numbers only. See ordering information on Page A-41 for required dash numbers.

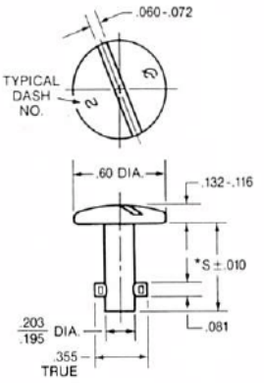

Slotted Recess

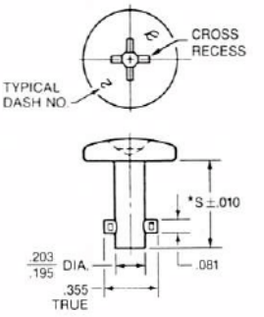

Cross Recess

Material	Slotted Recess Part No.	Cross Recess Part No.
Stainless Steel (Passivated)	50S10-[ ]-1BB	50S10-[ ]-4BB
Steel (Zinc Plated, Clear Chromate)	50S10-[ ]-1AA	—

Maximum Service Temperature: 450°F., except when plastic snap-in grommets are used. These styles are limited to 250°F.

**S = .429 + (.024 x Dash No.)*

Plastic Knob Styles

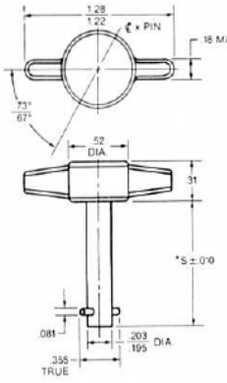

T-Knob

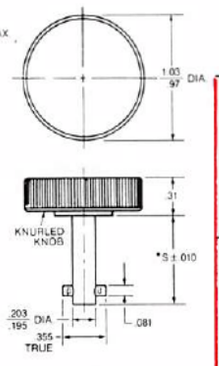

Knurled Knob

	Basic Part Nos. Maximum Service Temperature: 250°F. Shank Material: Steel (Zinc Plated, Clear Chromate)			
	Black	Red	Grey	Beige
T-Knob	50S10-[ ]-6AC	50S10-[ ]-6AD	50S10-[ ]-6AE	50S10-[ ]-6AF
Knurled Knob	50S10-[ ]-7AC	50S10-[ ]-7AD	50S10-[ ]-7AE	—

**S = .429 + (.024 x Dash No.)*

Clip-on Receptacle

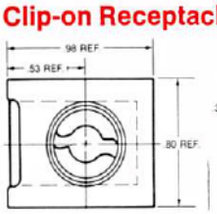

Top View

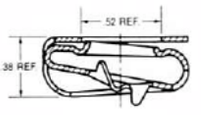

Side View

Part No.	Material/Finish	Weight (per 100 pcs.) (lbs.)	Max. Temp.
50R4-1-1AA	Steel (Cadmium Plated, Gold Chromate)	1.95	450°F.

Get quote
Angic Global Solutions 1-888-872-0690
https://www.AngicGlobal.com Sales@AngicGlobal.com

A

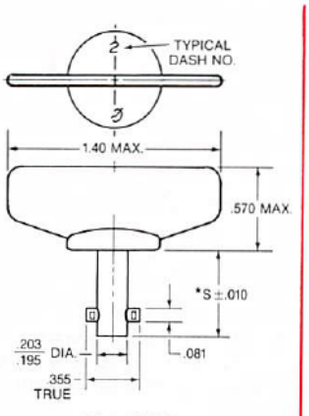

Fixed Wing

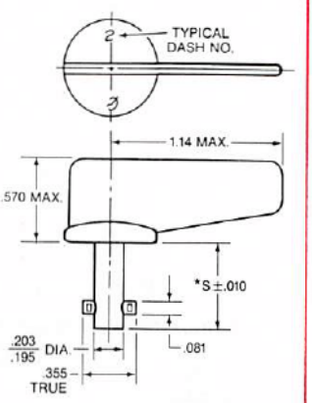

Fixed Offset Wing

Part No.	Part No.
–	–
50S10-[ ]-2AA	50S10-[ ]-3AA

Specifications:

Ultimate Tensile Strength: 200 lbs.
Stud Grip Increments: .0236 inch (0.6 mm)
For optional styles, materials and finishes, contact the Camloc Products Division.

Plastic Snap-in Grommet

Order separately. Use to captivate stud assembly to panel. Eliminates need for retaining ring. Speeds assembly.

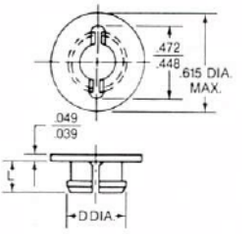

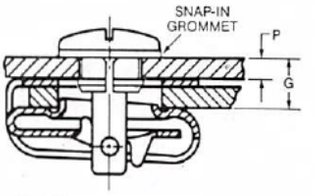

Typical Installation

Part No.	L Ref.	D Dia. Max.	P Max.	G Min. (see note)	Weight (per 100 pcs.) (lbs.)
50S2-1-1AA	.140	.348	.062	.032	.035
50S12-1-1AA	.195	.390	.112	.094	.040
50S12-2-1AA	.245		.162	.144	
50S12-3-1AA	.295		.212	.194	
50S12-4-1AA	.345		.262	.244	

Notes: *1. Grommets will protrude from the back side of panel. Minimum "G" thickness must be observed to prevent grommets from jamming against the receptacle.*
2. Standard grommet color is white.

Retaining Ring

Order separately. Use to captivate stud assembly to panel in lieu of snap-in grommet.

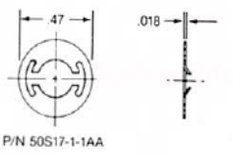

Steel (Cadmium, Gold Chromated)
Weight per 100 pcs.: 0.10 lbs.

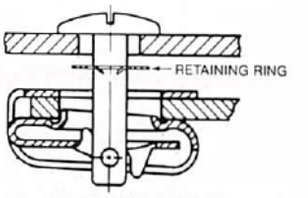

Typical Installation

Retaining Ring Installation Tool

P/N T98-1

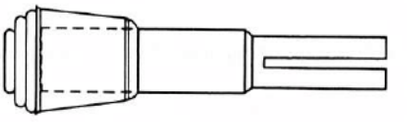

Get quote
Angic Global Solutions 1-888-872-0690
https://www.AngicGlobal.com Sales@AngicGlobal.com

50F Series. Panel Preparation and Installation Data

For Studs used with Snap-in Grommets

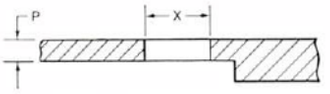

Determine panel thickness "P" and form through hole to corresponding "X" diameter. Panels with thicknesses greater than .262 inch must be back counterbored to a concentric diameter of .438 inch with a maximum remaining material thickness of .262 inch.

P	X
up to .062	.315-.320
.063-.162	.350-.355
.163-.262	.357-.362

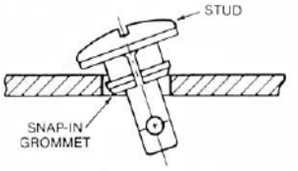

Assemble stud with grommet and insert stud through panel.

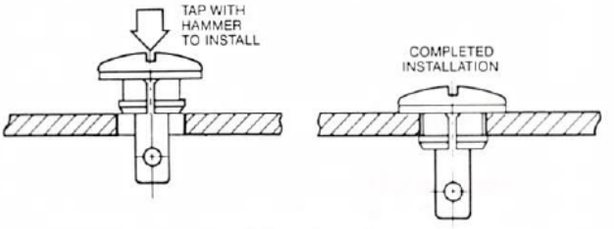

Tap stud with hammer to seat assembly into panel.

For Studs used with Retaining Rings

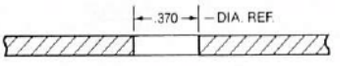

Form through hole to .370 inch diameter.

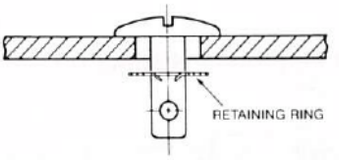

Insert stud through panel and attach retaining ring.

Frame Preparation for Receptacle Installation

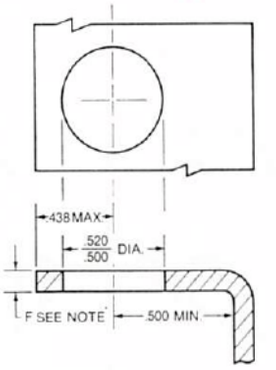

Form .500-.520 through hole.

Important Note: Recommended "F" thickness range is .062-.188. The range can be extended to .032 to .219 at the extreme, however, installation problems may be encountered.

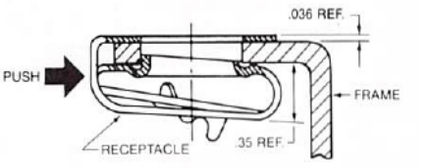

Slide receptacle onto frame and locate on through hole.

Recessed Frame

Standard installation (illustrated above) will cause a minimum gap of .035 inch between panel and frame due to receptacle protrusion. To eliminate gap, dimple frame to provide recess as shown.

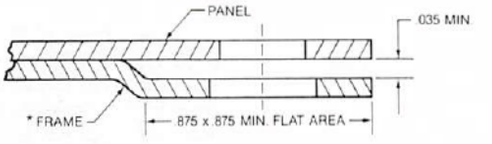

Get quote
Angic Global Solutions 1-888-872-0690
https://www.AngicGlobal.com Sales@AngicGlobal.com

50F Series. Ordering Information/ Stud Dash Number Selection

To Select Stud Dash Number:

1. Determine "G" total thickness.

Note: Increase "G" to allow for thickness of paint or other finishes, and for the compressed thickness of any gasket.

2. Locate "G" in the table below.

3. Then find the corresponding stud dash number in the column designated for the selected retention method.

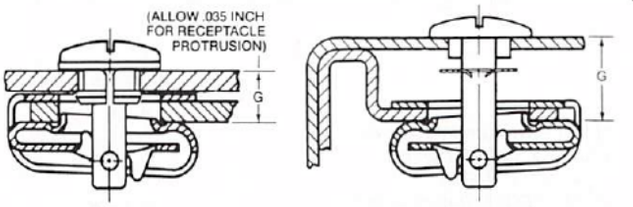

Standard Installation Recessed Frame

How to Order:

Example 1.
(For stud assembly using retaining ring)
Stud Assembly Used: 50S10-[?]-1AA
"G" Total Thickness = .155 inch
Stud Dash Number From Table = -7
Completed Part Number: 50S10-7-1AA

Example 2.
(For stud assembly using snap-in grommets)
Stud Assembly Used: 50S10-[?]-1AA
"G" Total Thickness = .155 inch
Stud Dash Number From Table = -9
Completed Part Number: 50S10-9-1AA (plus snap-in grommet selected)

Stud Dash Number Selection		
*G	Dash Numbers For Studs Used With Retaining Rings	Dash Numbers For Studs Used With Grommets
.055-.078	- 3	- 5
.079-.101	- 4	- 6
.102-.125	- 5	- 7
.126-.149	- 6	- 8
.150-.172	- 7	- 9
.173-.196	- 8	-10
.197-.220	- 9	-11
.221-.243	-10	-12
.244-.267	-11	-13
.268-.291	-12	-14

***Notes:** *1. If "G" total thickness is very near the top of the thickness range, selection of the next greater dash number is recommended. For "G" thicknesses greater than those tabulated, contact Camloc Products Division.*
2. Grip ranges are based on 0.6 mm increments converted to nearest thousandth of an inch.

ANGIC
Get quote
Angic Global Solutions 1-888-872-0690
https://www.AngicGlobal.com Sales@AngicGlobal.com

50F Series. Extra Heavy-Duty Stud Assemblies and Receptacles

Features: Rugged simplified design. • Particularly suited for use in adverse industrial and agricultural environments. • Utilizes belleville washers for high preloads and enhanced vibration resistance.

Specifications:
Ultimate Tensile Strength: 800 lbs.
Stud Grip Increments: .0236 inch (0.6 mm)

Note: Part numbers shown are basic part numbers only. See ordering information on opposite page for required dash numbers.

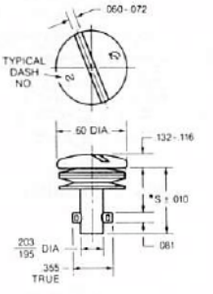

Slotted Recess

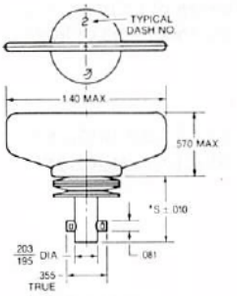

Fixed Wing

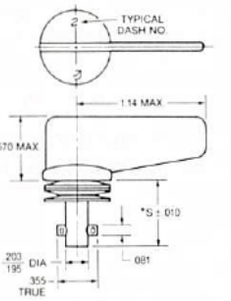

Offset Fixed Wing

Material	Part No.	Part No.	Part No.
Steel Stud (Zinc Plated, Clear Chromate) Washers (Cadmium Plated, Clear Chromate)	50S8-[ ]-1AA	50S8-[ ]-2AA	50S8-[ ]-3AA

Maximum Service Temperature: **S = .429 + (.0236 x Dash No.)*

Plastic Knob Styles

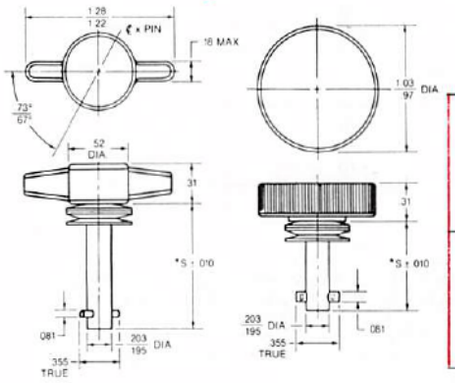

	Basic Part Nos. Shank Material: Steel (Zinc Plated, Clear Chromate) Washer Material: Steel (Cadmium Plated, Clear Chromate)			
	Black	Red	Grey	Beige
T-Knob	50S8-[ ]-6AC	50S8-[ ]-6AD	50S8-[ ]-6AE	50S8-[ ]-6AF
Knurled Knob	50S8-[ ]-7AC	50S8-[ ]-7AD	50S8-[ ]-7AE	—

**S = .429 + (.0236 x Dash No.)*

Receptacles

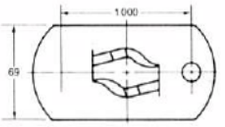

Bottom View

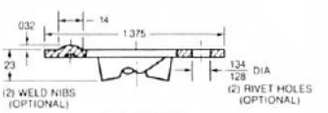

Side View

Material	Part No. (with rivet holes)	Part No. (with weld nibs)
Steel (Zinc Plated)	50R3-1-1AA	—
Steel (Oil Coated)	—	50R3-1-2AB

Weight per 100 pcs.: 1.43 lbs.

Snap-on Retaining Ring



Part No.	Material	Weight (per 100 pcs.) (lbs.)
50S17-1-1AA	Steel (Cadmium Plated, Gold Chromate)	0.10

Retaining Ring Installation Tool T98-1

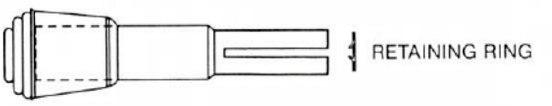

Get quote
Angic Global Solutions 1-888-872-0690
https://www.AngicGlobal.com Sales@AngicGlobal.com

A

Panel Preparation and Installation Data

Panel Preparation for Stud Installation.

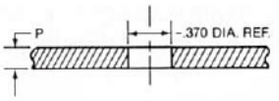

Form .370 Dia. through hole. Insert stud through panel and attach retaining ring.

Panel Preparation for Receptacle Installation.

50R3-1-1AA Standard Mount

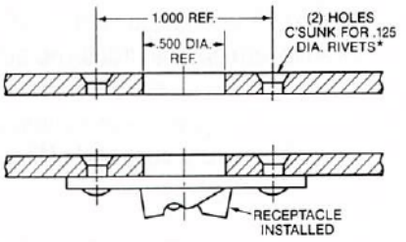

Drilled and countersunk rivet holes

**Rivets Not Furnished.*

50R3-1-2AB Weld Mount

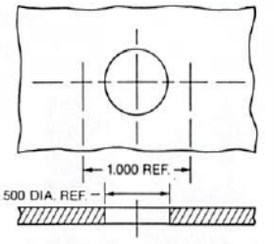

Form .500 inch through hole.
Locate receptacle on center and spot weld in place.

Ordering Information/ Stud Dash Number Selection

To Select Stud Dash Number.

1. Determine "G" thickness.

Note: Increase "G" to allow for thickness of paint or other finishes and for the compressed thickness of any gasket.

2. Locate "G" total thickness from the table below.
3. Then find the corresponding stud dash number.

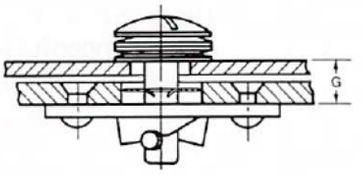

How to Order:

Stud Assembly Used: 50S8-[?]-1AA
"G" Total Thickness = .246 inch
Stud Dash Number From Table = -10
Complete Part Number: 50S8-10-1AA

Stud Dash Number Selection	
"G" Total Thickness	Dash Number
.020 - .043	- 1
.044 - .066	- 2
.067 - .090	- 3
.091 - .113	- 4
.114 - .137	- 5
.138 - .161	- 6
.162 - .184	- 7
.185 - .208	- 8
.209 - .231	- 9
.232 - .255	-10

Important Note: *If the total thickness "G" is very near the top of the thickness range, selection of the next greater dash number is recommended. For "G" thicknesses longer than those tabulated, contact Camloc Products Division.*

ANGIC GLOBAL SOLUTIONS Get quote
Angic Global Solutions 1-888-872-0690
https://www.AngicGlobal.com Sales@AngicGlobal.com

Extra Heavy Duty Fastener Enhances Passenger Safety In Vans

(Excerpts from an article in RV News)
(See 91F Series in this catalog.)

Motor vehicle safety standard 207 squarely addresses the significance of adequately anchored seating in multi-passenger vehicles. A seat that tears loose on impact adds to the hazards that are inherent in crash situations. It must remain in place, affording protection to the occupant rather than become an additional source of danger.

Standard 207 sets rigid strength requirements for the anchorage of occupant seats which demand fasteners of high strength and positive clamping force. A recent fastener design by the Camloc Products Division, designated 91F, was specifically created to meet the requirements affecting van seat hold-down. Here is a brief description of a test recently conducted by an independent test organization on a three-passenger sofa lounge seat.

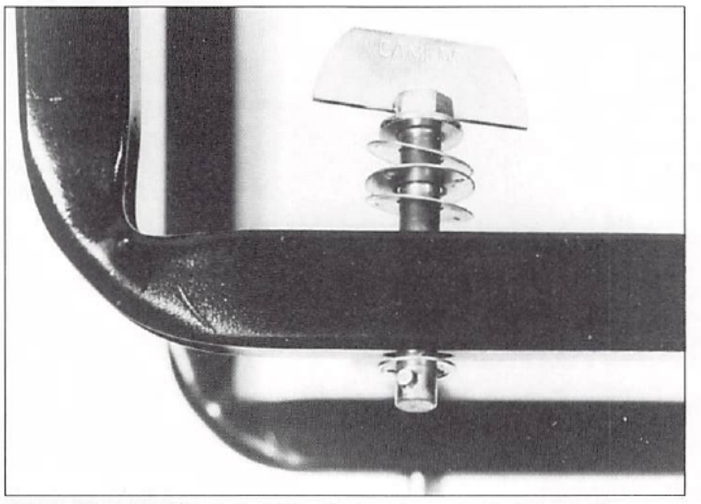

***91F Series** centered, fixed-wing 1/4 turn fastener for van seat hold-down. Shown assembled to seat rail with 3 Belleville spring washer and retaining ring.*

Test Specimen:

• A typical three-passenger sofa lounge fastened with four Camloc 1/4 turn heavy duty fasteners (91F Series, Pg. A-64-A-66) designed to anchor in equally heavy duty receptacles. The seat assembly was made of 9/16" plywood and two fasteners were located on each leg 1 1/2" inboard of the inner surface of the vertical members of the leg assembly. The weight of the upholstered seat was established at 65 pounds and the center of gravity as being situated 12.64" above the floor. Each leg of the seat assembly was rigidly attached to a formed sheet metal plate on which the receptacles had been installed. The steel plates were bolted to structural steel channels and the whole assembly clamped to a non-yielding test stand.

Specification Standard:

• In any position to which the seat can be adjusted it must be able to withstand 20 times its weight applied in a forward or rearward longitudinal direction. It must also be able to withstand a horizontal force in a rearward direction at the top of the seat back that produces 6600 inch-pounds moment about the "seating reference point".

Center of gravity loads were applied using a hydraulic ram which pulls with an effective piston area of 6,075 square inches. The seat was tested with loading in the both forward and rearward directions.

Forward CG Load (20w)	1330#
Rearward CG Load (20w)	1320#
Moment Load	10,080#

The Camloc 91F fasteners successfully passed all the tests involved. In the ultimate test to failure, the hydraulic ram pull-bar fractured but the studs remained engaged and looked fine to the very end of the test.

How They Operate:

Attachment or removal of the seat support assembly is almost instantaneous. All it takes is a quarter turn (90 degrees) to secure or release the locking pin from the receptacle. Proper sizing of the stud length allows it to pass through the carpet, pad, plywood and steel floor. The clamping force of the fastener is more than adequate to hold the seat firmly preventing movement on impact.

These heavy-duty fasteners are recommended for use on all types of multi-seat vehicles during original construction or for van conversions.

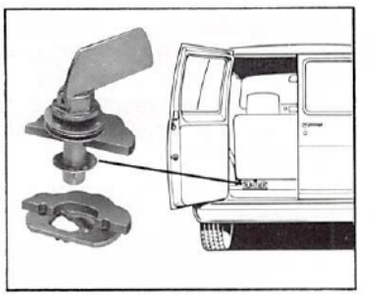

Get quote

Angic Global Solutions 1-888-872-0690
https://www.AngicGlobal.com Sales@AngicGlobal.com

QUICK OPERATING 1/4-TURN FASTENERS 4002 SERIES

The 4002 Series fasteners utilize a variety of grommets designed to reinforce the panel for added strength. Certain 4002 series 1/4-turn fasteners are qualified to MIL-F-5591* specifications for sizes 5 and 7.

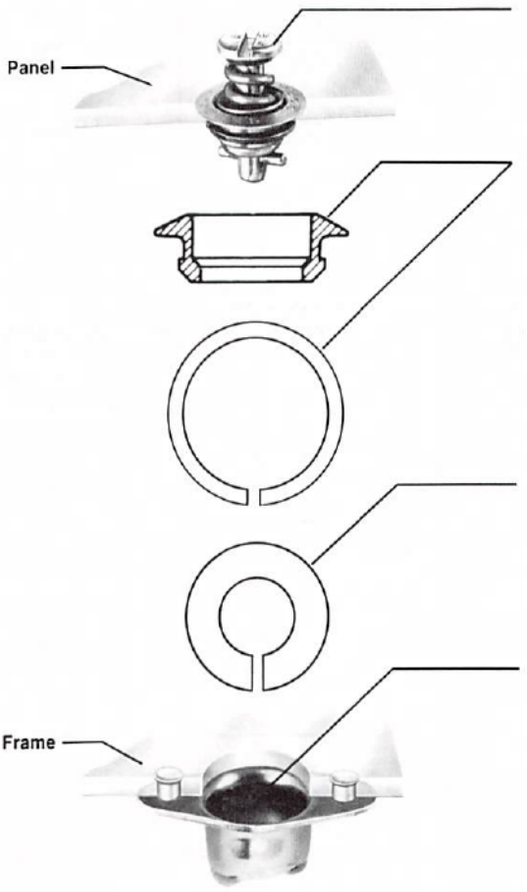

Stud

Available in six head styles.

Grommet and Grommet Retaining Ring

Must be installed in top of panel (Plus Flush Version shown for Ring Retained Grommets). Flare Retained Grommets are also available which do not use a Retaining Ring.

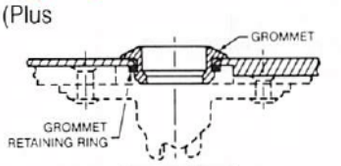

Grommet and Grommet Retaining Ring shown installed in panel

Stud Retaining Ring

Used for long studs (-16 or greater). Shorter studs (-15 and under) are self-captivating and do not require retaining rings.

Receptacle

Available in six styles.

Specifications:

Ultimate tensile strength: 1050 lbs.
Working strength: 700 lbs.
Stud grip increments: .030 inch.
Contact factory for strengths for stainless steel stud assemblies.

To Order a Complete Fastening System:

1. Select receptacle to be used. **Stud part numbers vary depending upon the specific receptacle used.**
2. Select style of stud to be used, then combine thicknesses of panel and frame to determine total thickness, "G". Find the specific stud part number adjacent to "G" Total Thickness column with respect to receptacle selected.
3. If you are ordering long studs (-16 or greater), you will need to order a Stud Retaining Ring. Shorter studs (-15 and under) are self-captivating and do not require retaining rings.
4. A Grommet is required for all 4002 studs except Part Number 40S128. A choice of Flared or Retaining Ring Retained styles are available.

*Meets the design, physical and performance requirements of MIL-F-5591. However, full mechanical properties testing may not be performed on each production lot.

Section Contents

	Page No.
Stud Assemblies	A-46 - A-47
Receptacles	A-48 - A-50
Grommets	
Retaining Ring Retained	A-51 - A-52
Flare Retained	A-52 - A-53
Grommet Installation	
Retaining Ring Retained	A-54 - A-56
Flare Retained	A-57
Stud Assembly Installation	A-58
Sealed Stud and Grommet Installation	A-59
Receptacle Installation	A-60
Stud Dash Number Selection	A-61 - A-62
Weights for Flare Retained Grommets	A-63

Get quote
Angic Global Solutions 1-888-872-0690
https://www.AngicGlobal.com Sales@AngicGlobal.com

4002 Series. Stud Assemblies and Receptacles

Note: Part numbers shown are basic part numbers only. See ordering information on Page A-62 for required dash numbers.

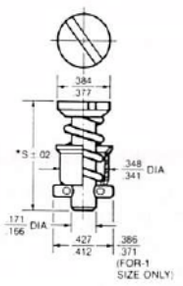

*S = .63 + (.03 x Dash No.)
Slotted Recess

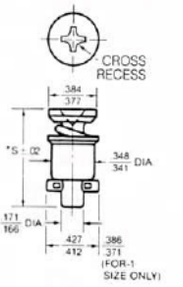

*S = .62 + (.03 x Dash No.)
Cross Recess

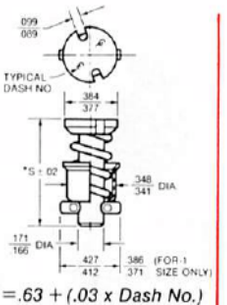

*S = .63 + (.03 x Dash No.)
"Tamper Resistant" Recess

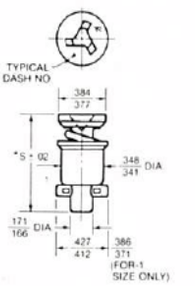

*S = .62 + (.03 x Dash No.)
Recess Style per NAS4000

Material	Part No.	Part No.	Part No.	Part No.
Stainless Steel	4002-[ ]S	4055-[ ]S	—	40S119-[ ]-3AA
Stainless Steel High Strength	40S41-[ ]S	—	40S80-[ ]B	—
Stainless Steel (Spring: Inconel "X")	40S45-[ ]	—	—	—
Steel (Cadmium Plated, Yellow Chromate)	4002-[ ]	40S5-[ ]	—	40S119-[ ]-3BB
Steel (Zinc Plated, Clear Chromate)	—	40S5-[ ]C	40S80-[ ]C	—
Steel (Nickel Plated)	40S79-[ ]	—	—	—
Steel (Head: Chrome Plated)	—	—	—	—
Steel (Zinc Plated, Yellow Chromate)	—	40S5-[ ]D	40S80-[ ]E	—

Maximum Service Temperature: Stainless Steel with Inconel "X" Spring — 700°F.; Stainless Steel — 550°F.; Sealed Stud Assembly, P/N 40S37-[ ] — 130°F.; all others 450°F.

***Note:** 4002 Series stud assemblies seat nominally flush with mating grommet. For Wing, Bail Handle or Knurled Knob versions, top side protrusion is nominally equal to mating grommet "B" dimension plus the height of the wing, handle or knob.*

Specifications:

This series utilizes a variety of grommets which must be installed into the top panel. They significantly enhance the system's performance.

Ultimate tensile strength: 1050 lbs.
Working strength: 700 lbs.
Stud grip increments: .030 inch.
Contact factory for strengths for stainless steel stud assemblies.
For other styles, materials, or finishes, please contact Camloc Products Division.

Grommetless Stud

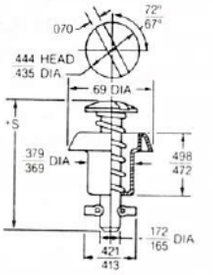

S = Protruding Slotted Head Part No. 40S128-( )-1AA

40S128
Protruding Head

NOTE: This stud does not require a grommet, but must be used with retaining ring part number 40S142-1-1AA.

Retaining Ring

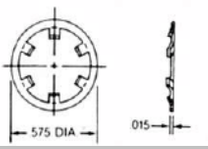

Part Number
40S142-1-1AA
CRES Spring
Steel (Passivated)

ANGIC GLOBAL SOLUTIONS
Get quote
Angic Global Solutions 1-888-872-0690
https://www.AngicGlobal.com Sales@AngicGlobal.com

	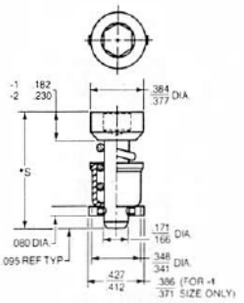 *S = .71 + (.03 × Dash No.) **Hex Recess**		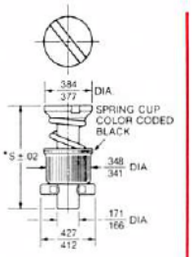 *S = .63 + (.03 x Dash No.) **Sealed**	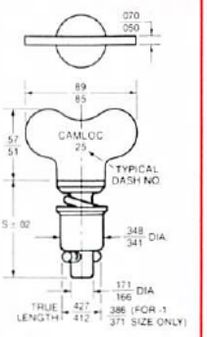 *S = .63 + (.03 x Dash No.) **Fixed Wing**	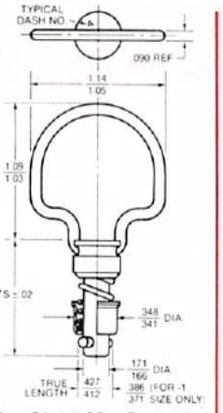 *S = .81 + (.03 x Dash No.) **Folding Bail Handle**	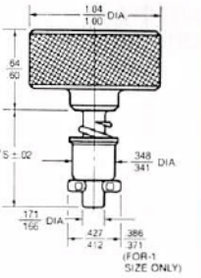 *S = .53 + (.03 x Dash No.) **Knurled Knob**
	4mm Part No.	6mm Part No.	Part No.	Part No.	Part No.	Part No.
	—	—	—	4002-[ ]SW	—	40S83-[ ]
	—	—	—	—	—	—
	—	—	—	—	—	—
	—	—	40S37-[ ]†	4002-[ ]W	40S47-[ ]	40S83-[ ]A
	—	—	—	—	—	—
	—	—	—	40S77-[ ]	40S47-[ ]A	—
	—	—	—	—	—	40S83-[ ]B
	40S122-[ ]-1AA	40S122-[ ]-2AA	—	—	—	—

† *Not available with dash numbers smaller than #4.*
Refer to installation instructions on page A-59.

Get quote
Angic Global Solutions 1-888-872-0690
https://www.AngicGlobal.com Sales@AngicGlobal.com

4002 Series. Receptacles

Standard Mounting

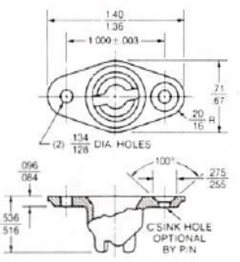

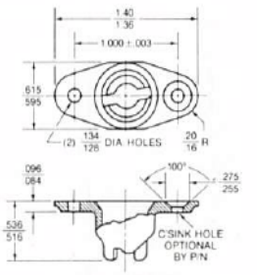

Narrow Width

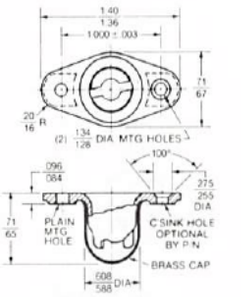

Encapsulated
See Note 1 for sealing

Material	Part No.	Rivet Holes	Weight (per 100 pcs.) (lbs.)	Part No.	Rivet Holes	Weight (per 100 pcs.) (lbs.)	Part No.	Rivet Holes	Weight (per 100 pcs.) (lbs.)
Stainless Steel	—	—	—	—	—	—	—	—	—
	—	—	—	—	—	—	—	—	—
Stainless Steel (Red Dye)	214-16S	Plain	1.76	—	—	—	—	—	—
	214-16SD	C'Sunk	1.68	—	—	—	—	—	—
Steel (Cadmium Plated)	—	—	—	—	—	—	—	—	—
	—	—	—	—	—	—	—	—	—
Silicon Bronze (Cadmium Plated)	214-16	Plain	1.85	214-16N	Plain	1.80	40R12-1	Plain	2.45
	214-16D	C'Sunk	1.77	214-16ND	C'Sunk	1.72	40R12-2	C'Sunk	2.37
Zinc (Zinc Plated)	214-16E	Plain	1.44	—	—	—	—	—	—
Steel (Cad. Plated) Receptacle Element: Silicon Bronze (Cad. Plated)	—	—	—	—	—	—	—	—	—
Steel (Cad. Plated) Receptacle Element: Zinc (Zinc Plated)	—	—	—	—	—	—	—	—	—

Standard Mounting Continued

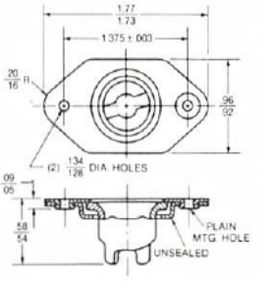

Floating (1/8" total)

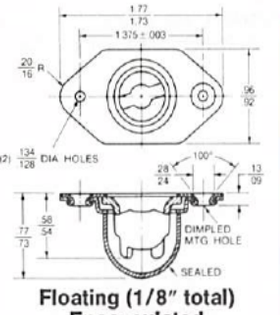

Floating (1/8" total) Encapsulated
See Note 1 for sealing

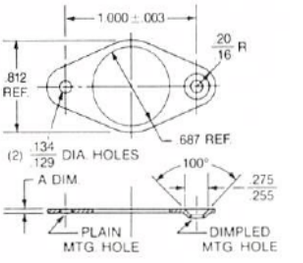

Shims

Material	Part No.	Rivet Holes	Weight (per 100 pcs.) (lbs.)	Part No.	Rivet Holes	Weight (per 100 pcs.) (lbs.)	Part No.	A Dim.	Rivet Holes	Weight (per 100 pcs.) (lbs.)
Stainless Steel	244-22S	Plain	2.77	—	—	—	—	—	—	—
Steel (Cad. Plated) Receptacle Element: Silicon Bronze (Cad. Plated)	244-22	Plain	2.99	244-22C	Plain	3.98	—	—	—	—
Steel (Cad. Plated) Receptacle Element: Zinc (Zinc Plated)	244-22E	Plain	2.61	244-22EC	Plain	3.60	—	—	—	—
Aluminum	—	—	—	—	—	—	40R8-16-1A	.019-.013	Plain	0.06
	—	—	—	—	—	—	40R8-16-1	.033-.027	Plain	0.11
	—	—	—	—	—	—	40R8-16-2	.033-.027	Dimpled	0.11

Notes: *1. Use to seal against leakage of air, dust or water. Install with suitable sealing compound such as 3M #EC-847 or adhesive silicon sealant.*
2. Receptacles and Shims with countersunk holes are for use with dimpled panels.

Maximum Service Temperatures for Standard Mounting Types: Stainless Steel—700°F.; Steel (Cadmium Plated) and Silicon Bronze (Cadmium Plated)—450°F.; Silicon Bronze with Brass Cap and Steel with Zinc Receptacle Element—300°F.; Aluminum—350°F.

Get quote
Angic Global Solutions 1-888-872-0690
https://www.AngicGlobal.com Sales@AngicGlobal.com

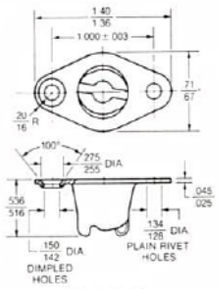

Lightweight

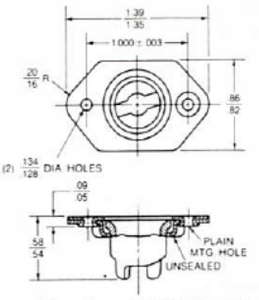

Floating (1/16″ total)

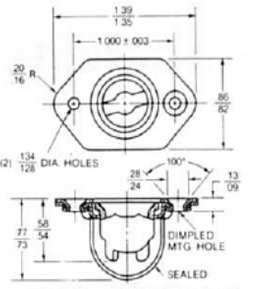

Floating (1/16″ total) Encapsulated
See Note 1 for sealing

Part No.	Rivet Holes	Weight (per 100 pcs.) (lbs.)	Part No.	Rivet Holes	Weight (per 100 pcs.) (lbs.)	Part No.	Rivet Holes	Weight (per 100 pcs.) (lbs.)
40R17-1	Plain	1.20	244-16S	Plain	2.57	244-16SC	Plain	3.31
40R17-2	Dimpled	1.20	244-16SD	Dimpled	2.59	244-16SCD	Dimpled	3.33
—	—	—	—	—	—	—	—	—
—	—	—	—	—	—	—	—	—
40R17-5	Plain	1.19	—	—	—	—	—	—
40R17-6	Dimpled	1.19	—	—	—	—	—	—
—	—	—	—	—	—	—	—	—
—	—	—	—	—	—	—	—	—
—	—	—	—	—	—	—	—	—
—	—	—	244-16	Plain	2.60	244-16C	Plain	3.33
—	—	—	244-16D	Dimpled	2.62	244-16CD	Dimpled	3.35
—	—	—	244-16E	Plain	2.24	—	—	—

2-Piece Floating Receptacles/Spotweld Attachment

These receptacles are designed to be attached by spotwelding. Separate cage and receptacle element allow smaller envelopes and significant weight savings over conventional designs. Choose from versions within 1/16 inch or 1/8 inch total float.

Order receptacle element and cage separately.

For 1/16 inch Total Float

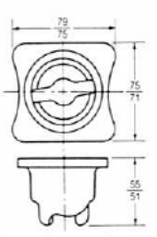

Receptacle Element

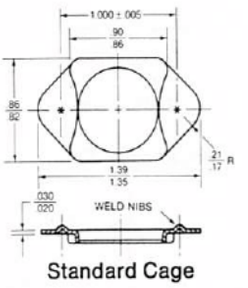

Standard Cage

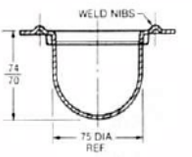

Encapsulated Cage

For 1/8 inch Total Float

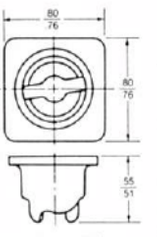

Receptacle Element

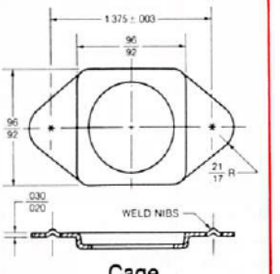

Cage

Material	Receptacle Element		Cages				Receptacle Element		Cage	
			Standard		Encapsulated					
	Part No.	Weight*	Part No.	Weight*	Part No.	Weight*	Part No.	Weight*	Part No.	Weight*
Steel (Cadmium Plated)	—	—	756W	0.51	757W	1.43	—	—	706W	0.70
Silicon Bronze (Cadmium Plated)	751	1.74	—	—	—	—	701	1.65	—	—
Zinc (Zinc Plated)	751E	1.36	—	—	—	—	701E	1.29	—	—

*Weights shown are in lbs. per 100 pcs.

ANGIC GLOBAL SOLUTIONS Get quote
Angic Global Solutions 1-888-872-0690
https://www.AngicGlobal.com Sales@AngicGlobal.com

4002 Series. Receptacles continued

Side Mounting

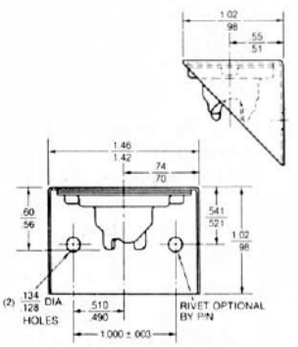

Floating (1/16″ total)

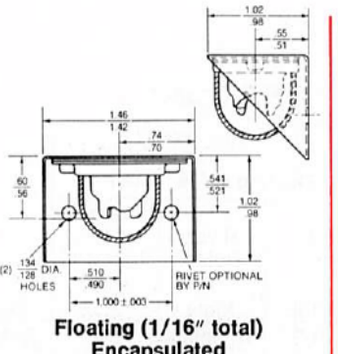

Floating (1/16″ total) Encapsulated
See Note 1 for sealing

Material	Part No.	Rivet Holes	Weight (per 100 pcs.) (lbs.)	Part No.	Rivet Holes	Weight (per 100 pcs.) (lbs.)
Steel (Cad. Plated) Receptacle Element: Silicon Bronze (Cad. Plated)	244-16B-R	Plain	4.80	244-16BC-R	Plain	5.84
	244-16B	None (Weld Type)	4.84	244-16BC	None (Weld Type)	5.80

Notes: *1. Use to seal against leakage of air, dust or water. Install with suitable sealing compound such as 3M #EC-847 or adhesive silicon sealant.*

2. Maximum Service Temperature: 450°F.

Clip-In

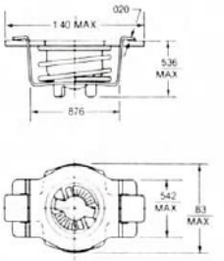

Bottom View
Provides 1/8″ Float

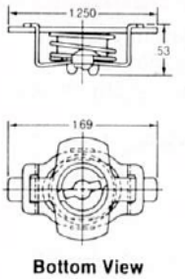

Bottom View
Provides 1/4″ Float

Material	Part No.	Rivet Holes	Part No.	Rivet Holes
Steel & Zinc Alloy (Zinc Plated)	40R39-1-1AA	None	—	—
Steel (Cad. Plated) Receptacle Element: Silicon Bronze (Cadmium Plated)	—	—	40R44-1-1AA	None

Maximum Service Temperature: 300°F.

Get quote

Angic Global Solutions 1-888-872-0690
https://www.AngicGlobal.com Sales@AngicGlobal.com

4002 Series. Grommets

4002 Series stud assemblies must be used in conjunction with one of the grommets shown here.

Both flush mounting and plus flush grommets are available with either retaining ring or flare retention.

A

Retaining Ring Retained

Plus Flush Grommets

Ring retained grommets are easily installed without the need for extensive special tooling.

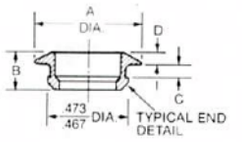

Plus Flush Version

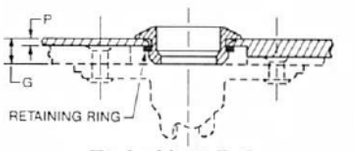

Typical Installation
(for detail see Page A-54).

Part No.	P Max. Thickness	Material	A	B	C	D	G Min. (Note 1)	Weight (per 100 pcs.) (lbs.)
4002-N2S	.025	Stainless Steel (Cadmium Plated)	.625 / .617	.201 / .193	.082 / .074	.069 / .063	.053	0.40
4002-N2		Steel (Cadmium Plated)						0.39
4002-NS	.065	Stainless Steel	.625 / .617	.201 / .193	.122 / .114	.029 / .023	.091	0.31
4002-N		Steel (Cadmium Plated)						0.30
40G6-2		Alloy Steel (Cadmium Plated, Olive Drab)						0.30
4002-0S	.094	Stainless Steel	.625 / .617	.202 / .192	.157 / .137	.029 / .023	.116	0.34
4002-0		Steel (Cadmium Plated)						0.33
40G6-1		Alloy Steel (Cadmium Plated, Olive Drab)						0.33
4002-N3	.128	Steel (Cadmium Plated)	.876 / .867	.252 / .244	.128 / .120	.054 / .048	.150	0.60

Retaining Ring Retained

Flush Mounting Grommets (Standard Series)

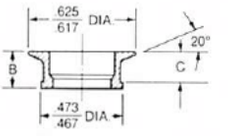

Flush Mounting Version

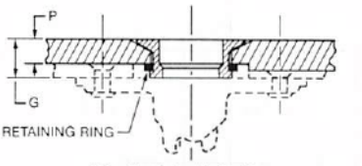

Typical Installation
(for detail see Page A-54).

Part No.	P Max. Thickness		Material	B	C	G* Min. (Note 1)	Weight (per 100 pcs.) (lbs.)
	Std. Panel	Dimpled Panel					
4002-GS	.074	.064	Stainless Steel	.191 / .183	.132 / .124	.090	0.31
4002-G			Steel (Cadmium Plated)				0.30
40G5			Alloy Steel (Cadmium Plated, Olive Drab)				0.30
4002-HS	.117	.086	Stainless Steel	.201 / .193	.173 / .167	.150	0.34
4002-H			Steel (Cadmium Plated)				0.33
40G10			Alloy Steel (Cadmium Plated, Olive Drab)				0.33

Notes: *(Applies to both Plus Flush and Flush Mounting Versions above.)*

**1. Grommets will protrude from the back side of panel. Minimum total thickness "G" must be observed to prevent grommets from jamming against the receptacle. (Under certain conditions "G" minimum may be reduced. See Note 3 on Page A-62.*

2. Panels with thicknesses greater than "P" Max. may be back counterbored.

3. Maximum Service Temperatures: Stainless—700°F.; Steel—450°F.

ANGIC GLOBAL SOLUTIONS Get quote
Angic Global Solutions 1-888-872-0690
https://www.AngicGlobal.com Sales@AngicGlobal.com

4002 Series. Grommets

Retaining Ring Retained

Flush Mounting Grommets. (High Shear Series)

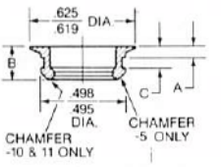

High Shear Flush Mounting

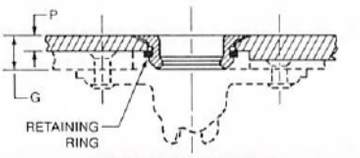

Typical Installation
(for detail see Page A-54).

Maximum Service Temperature: —450°F.

Part No.	Material	P Max.	G* Min.	Dimensions A	Dimensions B	Dimensions C	Weight (per 100 pcs.) (lbs.)
40G1-5	Alloy Steel (Cadmium Plated)	.065	.120	.063-.066	.185-.189	.129-.132	.37
40G1-8		.092	.150	.090-.093	.185-.189	.156-.159	.41
40G1-10		.113	.175	.111-.114	.215-.218	.177-.180	.50
40G1-11		.128	.175	.126-.129	.215-.218	.192-.195	.50

Important Notes:

1. Grommets will protrude from the back side of panel. Minimum total thickness "G" must be observed to prevent grommets from jamming against the receptacle. (Under certain conditions "G" minimum may be reduced. See Note 3 on Page A-62.)

2. For maximum shear capability, receptacle mounting hole in substructure may be reduced to .578 inch. This hole size provides no accommodation for misalignment.

Flare Retained

Flush and Plus Flush Grommets

Flare retained grommets will accommodate relatively thick panels often eliminating the need for back counterboring. Flared grommets should also be specified when axial grommet movement must be restricted.

Note: *Part numbers shown are basic part numbers only. See Data Table indicated below for "P" panel thickness, "L" dimension and required grommet length dash number.*

Plus Flush Series

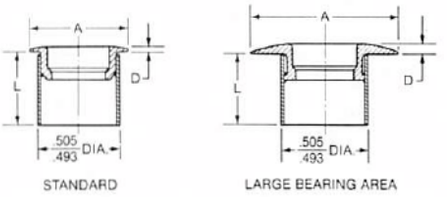

Flush Series

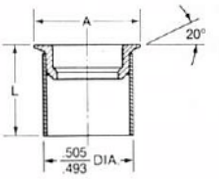

Typical Installation

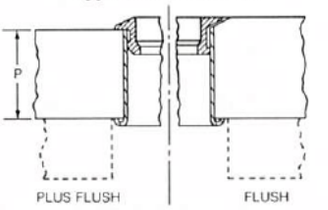

Series	Part No.	Material	A dia.	D	Data Tables: Look up "P" and "L" dimensions, plus grommet length dash number, from the data table indicated below.(See next page)
Plus Flush, Standard	40G16-[ ]	Alloy Steel (Cadmium Plated)	.625 / .617	.049 / .043	#1
	40G16-[ ]S	Stainless Steel		.049 / .043	#1
	4002-P3-[ ]	Steel (Cadmium Plated)		.032 / .025	#3
	40G16-[ ]-1	Alloy Steel (Nickel Plated)		.049 / .043	#1
	40G16-[ ]-2	Alloy Steel (Cadmium Plated, Clear Chromate)		.049 / .043	#1
Plus Flush, Large Bearing Area	4002-P4-[ ]A	Stainless Steel	.876 / .867	.061 / .041	#3
	4002-P4-[ ]	Steel (Cadmium Plated)			#3
	4002-P4-[ ]B	Steel (Nickel Plated)			#3
Flush	40G15-[ ]S	Stainless Steel	.625 / .617	N/A	#2
	4002-P2-[ ]	Steel (Cadmium Plated)			#3
	40G15-[ ]	Alloy Steel (Cadmium Plated)			#2

Notes: *1. Maximum Service Temperature: Stainless Steel—700°F.; Steel (Cadmium Plated)—450°F.; Steel (Nickel Plated)—550°F.*
2. For weights see Page A-63.

ANGIC GLOBAL SOLUTIONS Get quote
Angic Global Solutions 1-888-872-0690
https://www.AngicGlobal.com Sales@AngicGlobal.com

4002 Series. Grommets (continued)

Data Tables for Flared Retained Grommets.

("P", "L" and Grommet Dash Numbers)

To Select Grommet Dash Number

1. Determine "P" panel thickness.
2. Locate "P" thickness in the appropriate table below.
3. Find the corresponding dash number to the right.

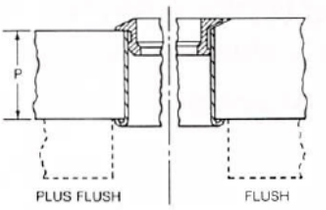

Typical Installation
(for detail See Page A-57).

DATA TABLE 1		
P Panel Thickness	L	Grommet Length Dash Number
.040-.069	.109-.116	-040
.070-.099	.142-.149	-070
.100-.129	.172-.179	-100
.130-.159	.202-.209	-130
.160-.189	.232-.239	-160
.190-.219	.262-.269	-190

DATA TABLE 2		
P Panel Thickness	L	Grommet Length Dash Number
.040-.069	.155-.166	-040
.070-.099	.145-.156	-070
.100-.129	.165-.176	-100
.130-.159	.193-.204	-130
.160-.189	.220-.231	-160
.190-.219	.250-.261	-190

Notes: *1. For longer lengths contact Camloc Products Division.*

2. Data tables are applicable to specific part numbers. Select the correct table as indicated on Page A-52.

See Grommet Weights on Page A-63.

DATA TABLE 3		
P Panel Thickness	L	Grommet Length Dash Number
.156-.219	.266-.296	-187
.220-.281	.328-.358	-250
.282-.343	.391-.421	-312
.344-.407	.453-.483	-375
.368-.432	.478-.508	-400
.405-.469	.516-.546	-437
.468-.532	.578-.608	-500
.593-.657	.703-.733	-625
.718-.782	.828-.858	-750
.780-.844	.891-.921	-812
.843-.907	.953-.983	-875
.968-1.032	1.078-1.108	-1000
1.030-1.094	1.141-1.171	-1062
1.093-1.157	1.203-1.233	-1125
1.218-1.282	1.328-1.358	-1250
1.343-1.407	1.453-1.483	-1375
1.468-1.532	1.578-1.608	-1500

How to Order:

Example:
"P" thickness = .125 inch.
Grommet selected: 40G15-[ ]S
From data above, Table #2 applies.
Grommet Dash Number selected from Table #2: -100.
Complete part number: 40G15-100S.

Get quote
Angic Global Solutions 1-888-872-0690
https://www.AngicGlobal.com Sales@AngicGlobal.com

4002 Series. Panel Preparation and Installation Data

(For Ring Retained Grommets)

Plus Flush Grommets

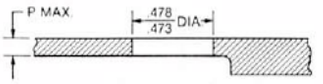

Drill #30 (.1285) pilot hole. Enlarge pilot hole to .478-.473 diameter with hole saw HS-471. "P" maximum panel thickness varies with grommet selected. Please see Page A-51 for tabulation.

Panels with thicknesses greater than "P" maximum must be back counterbored to a concentric .688 inch diameter with a remaining material thickness not exceeding "P" maximum.

Note: *Hole saws and counterboring tools are available as a convenience in selected sizes. Please see Page A-55.*

Flush Mounting Grommets

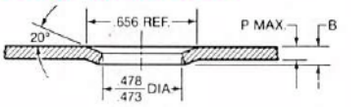

DIMPLED PANEL

P Max.	B Max.	Hole Saw	Dimpling Tool Set* (order both P/Ns)
.064	.074	HS-471	4G200M-[ ]
.086	.117		4G200F-[ ]

** See Next Page for dimpling tool ordering information.*

Dimpled Panel Preparation for panel thicknesses "P" up to .086 inch. Drill #30 (.1285) pilot hole. Enlarge pilot hole to .478-.473 diameter with hole saw HS-471. Then dimple using tools specified in the table above. Spot face back side of panel if required to meet "B" maximum.

Note: When using panels constructed of ductile materials, see alternate dimpling method.

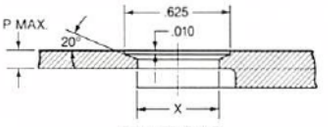

DRILLED PANEL

For panel thickness "P" larger than .086 inch, drill #30 pilot hole. Enlarge pilot hole using hole saw specifled below to X diameter. C'Sink using tool specified.

Grommet	X Dia.	Hole Saw	C'Sink Tool
40G1 High shear version only	.500 Min.	N/A	4GC-500 or 4GC-1-500*
All other flush mounting ring retained versions	.478 / .473	HS-471	4GC or 4GC-1-470*

**Supplied with optional 1/4-28-UNF-2A Thread*

"P" maximum panel thickness varies with grommet selected. Please see Pages A-51 and A-52. Panels with thicknesses greater than "P" maximum must be back counterbored to a concentric .688 inch diameter with a remaining material thickness not exceeding "P" maximum.

Note: *Hole saws, counterboring tools and countersinks are available as a convenience in selected sizes (see alternative dimple method)*

Installing Grommet

Insert grommet into mounting hole and captivate with retaining ring. Please see Page A-56 for more information.

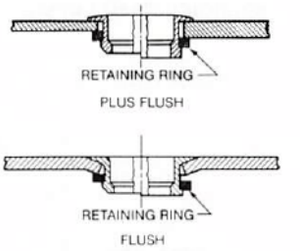

Typical Installations

Alternate Dimpling Method.

"Thin" panels constructed from ductile materials allow use of an alternative method which eliminates the need for grommet retaining rings.

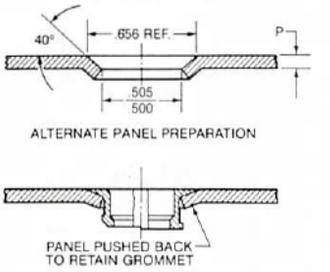

ALTERNATE PANEL PREPARATION

P Max.	Hole Saw	Dimpling Tool Set* (order both P/Ns)	Closing Tools* (order both P/Ns)
.086	HS-418	4-G100M-[ ] 4-G100F-[ ]	4-GM-[ ] 4-GF-[ ]

** See Next Page for dimpling tool ordering information.*

Drill #30 (.1285) pilot hole. Enlarge hole using hole saw P/N HS-418. Then dimple using tools tabulated above. Insert grommet and push panel back using closing tool specified. Panel must be securely engaged behind shoulder of grommet for positive retention.

ANGIC
Get quote
Angic Global Solutions 1-888-872-0690
https://www.AngicGlobal.com Sales@AngicGlobal.com

4002 Series. Panel Preparation and Installation Data (continued)

Installation Tools for Ring Retained Grommets.

Hole Saws

Accurately sizes grommet mounting holes.

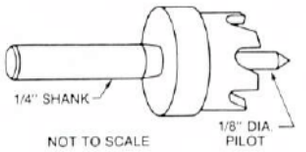

Part No.	Application
HS-418	Alternate dimple method only
HS-471	All mounting holes except alternate dimple method

Dimpling and Closing Tools

(Part number for dimpling and closing tools are listed with the installation instructions on preceding page.)

Dimpling tools for dimpling thin panels.

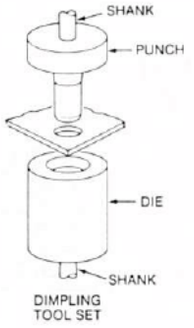

Closing tools must be used with alternative dimpling method to push back panel.

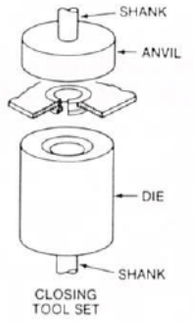

Dash Nos. for Shank Diameters and Lengths Used On Dimpling and Closing Tools		
Dash Number	Shank Dia.	Shank Length
-1	1/4	9/16
-2	5/16	5/8
-3	5/16	7/8
-4	3/8	7/8

Note:
It is recommended that tools be ordered in sets.
However, punch and dies may be ordered separately.

Tooling Part Number Structure
Example: 4G200M-2
- 2 = 5/16" Dia. x 5/8" Long Shank
- M = Punch
- F = Die

Counterboring Tool 4G2C

For back counterboring thick panels to .688 concentric diameter.

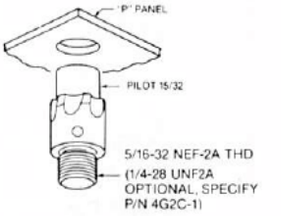

Countersinking Tool (4GC)

Forms C'Sink required for flush mounting grommets.

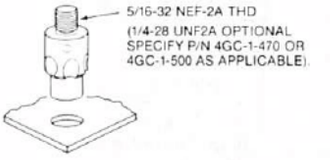

Part Number	Thread	Pilot Hole
4GC	5/16-32	.470
4GC-500	5/16-32	.500
4GC-1-470	1/4-28	.470
4GC-1-500	1/4-28	.500

Adaptors

May be used to adapt any C'Sinking or C'Boring tool for use in a drill chuck.

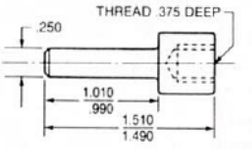

C'Sink Tool Thread	Adaptor Part No.
5/16-32 NEF-2B	T19
1/4-28 UNF-2B	T19-1

ANGIC GLOBAL SOLUTIONS
Get quote
Angic Global Solutions 1-888-872-0690
https://www.AngicGlobal.com Sales@AngicGlobal.com

Retaining Rings for Ring Retained Grommets.

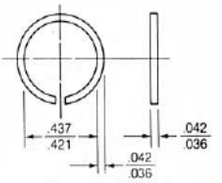

Standard Retaining Ring

Part No.	Material	Weight (per 100 pcs.) (lbs.)	Application	Tool
R4G	Steel (Cadmium Plated)	0.06	For use with all ring retained grommets except 40G1 Series	T26
40G26-1	Cres. (Non-Magnetic, Corrosion-Resistant)	0.07		

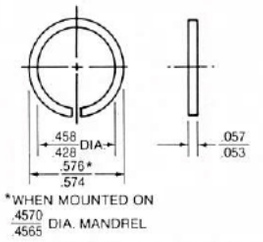

High Shear Retaining Ring

Part No.	Material	Weight (per 100 pcs.) (lbs.)	Application	Tool
R4T	Alloy Steel (Cadmium Plated)	0.15	For use with 40G1 Series High Shear Grommets only	T39-1

Retaining Ring Installation

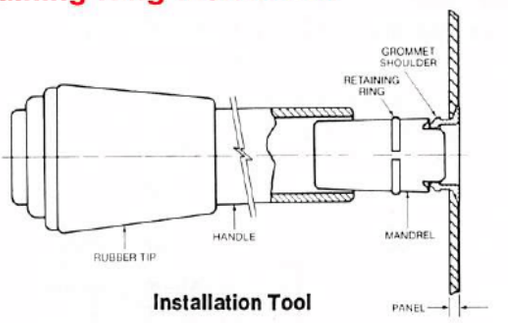

Installation Tool

1. Place grommet in prepared hole.
2. Place mandrel into grommet.
3. Place retaining ring over mandrel as shown.
4. Push handle over mandrel until snap ring is fully seated behind shoulder of grommet.

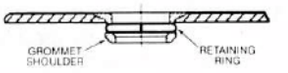

Installed Grommet

Retaining Ring Installation Tool and Replacement Components.

Description	Part No.
Complete Installation Tool	T-26
Rubber Tip	T-26-1
Mandrel	T-26-2

Get quote
Angic Global Solutions 1-888-872-0690
https://www.AngicGlobal.com Sales@AngicGlobal.com

4002 Series. Panel Preparation and Installation Data (continued)

For Flare Retained Grommets

Plus Flush Grommets

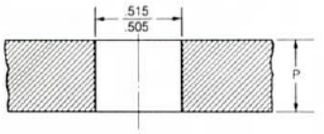

Form .515-.505 mounting hole. Insert grommet into panel and flare using appropriate flaring tools from table at right.

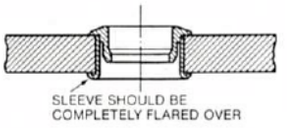

Typical Installation

Flush Mounting Grommets

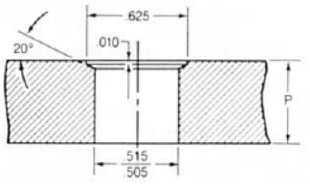

Form .515-.505 mounting hole. Countersink with C'Sink tool P/N 4-GC-500. Insert grommet into panel and flare using appropriate flaring tool set from table at right.

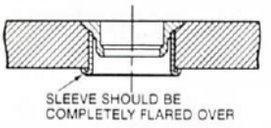

Typical Installation

Installation Tools

Flaring Tools

Used to flare grommets in place.

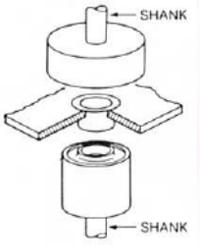

Tool Part Numbers		
Grommet Part No.	Punch	Die
4002- { P, P3, P4	4-GM-[ ]	4-PF-[ ]
40G15 40G16	4-GM-[ ]	T92-[ ]

Determine basic part number from table above. Flaring tools are available in a number of shank diameters and shank lengths. Select from table below and list corresponding dash number as a suffix to basic part number.

Shank Diameters and Lengths		
Dash Number	Shank Diameter	Shank Length
-1	1/4	9/16
-2	5/16	5/8
-3	5/16	7/8
-4	3/8	7/8

Example: To specify Flaring Die P/N 4-PF-[?], with 5/16" shank diameter and 7/8" shank length, complete the part number with a -3. Completed part number: 4-PF-3.

Countersinking Tool 4GC-500

Forms C'Sink required for Flush Mounting Grommets.

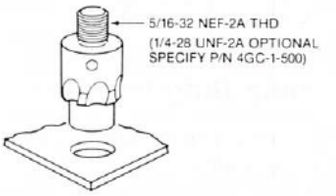

Adaptors for Countersinking Tools

May be used to adapt any C'Sinking tool for use in drill chuck.

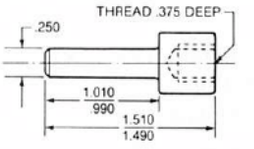

C'Sink Tool Thread	Adaptor Part Number
5/16-32NEF-2B	T19
1/4-28UNF-2B	T19-1

Get quote

4002 Series. Stud Assembly Installation

Installing Stud Into Panel

4002 Series studs must be used in conjunction with a grommet. (See Page A-51 for grommet selection.)

Compress stud assembly spring using Camloc pliers P/N 4P3 as shown. Insert stud through grommet and release when cross pin clears. Studs with dash numbers greater than -15 require retaining rings. These longer studs may be installed without compressing the stud assembly spring (pliers not required).

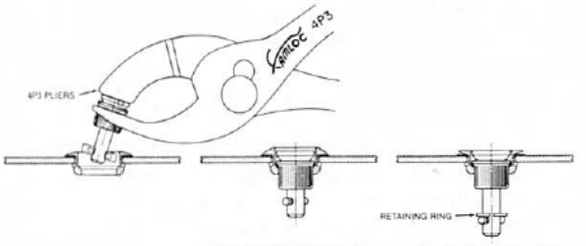

Dash "15" studs and smaller are self captivating.

Longer studs require a retaining ring.

Retaining Rings

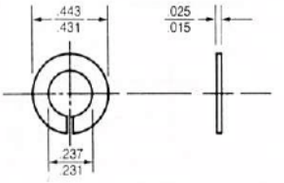

Part No.	Material	Maximum Service Temperature
4002-SW	Spring Steel (Cadmium Plated)	450°F.
4002-SW-SS	Stainless Steel	700°F.

Retaining Ring Installation

1. To install, place retaining ring on stud with slot aligned over left side of cross pin as shown on figure 1.

2. Snap retaining ring under cross pin using needle nose pliers, then rotate retaining ring 180° until ring is over right side of cross pin as shown on figures 2 and 3.

3. To complete installation, snap retaining ring over the right side of cross pin.

4. Completed installation is shown in figure 4.

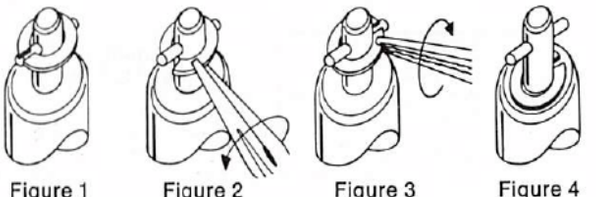

Figure 1 Figure 2 Figure 3 Figure 4

Stud Ejector Spring (Optional)

Provides full retraction of stud assembly to allow opening and closing of equipment without the possibility of jamming or damage.

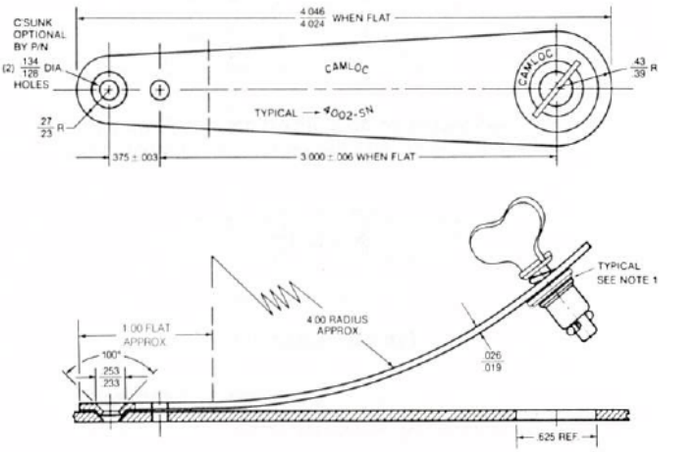

Material	Part Numbers: For use with Flush Grommets	Part Numbers: For use with Plus Flush Grommets	Rivet Holes
Spring Steel (Cadmium Plated)	4002 SG		Plain
		4002 SN	
	4002 SGD		Dimpled
		4002 SND	
	4002 SGF*		Plain
		4002 SNF*	

**Ejector P/N 4002 SNF is flat; i.e. no 4" radius bend.*

Notes: *1. Thru hole in Ejector Spring Part Numbers 4002SN, SND and SNF is formed to allow grommet to seat flush to top surface of Ejector Spring.*

2. When using Stud Ejector Springs, Retaining Ring/Retained style grommets must be used.

3. Maximum Service Temperature: 450°F.

4. Add .021 to total material thickness "G" when using these parts. See Page A-61.

5. Weight per 100 pieces:
Ejector Spring used with Flush Grommet: 1.84 lbs.
Ejector Spring used with Plus Flush Grommet: 1.86 lbs.

ANGIC
Get quote
Angic Global Solutions 1-888-872-0690
https://www.AngicGlobal.com Sales@AngicGlobal.com

4002 Series. Sealed Stud and Grommet Installation

40S37 Series stud assembly contains an integral seal which is usually sufficient where only splash-proof installation is required. For more complete sealing the following procedures should be followed.

Grommet Installation

1. Select grommet from the table below.

2. Prepare panel according to standard procedures. See table below for page reference.

3. Install gasket onto grommet.

4. Place grommet in prepared hole and complete installation following standard procedure.

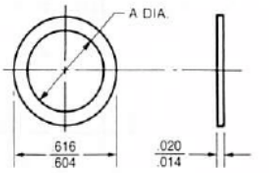

GROMMET GASKET

Grommet/Gasket Selection

Grommets	Gasket Part Number	A Dia.	Gasket Material	Installation Instructions
Ring Retained: 4002-G, H, N, O	40G11-3	.443 / .431	Vellumoid Gasket Material per Fed. Spec. HH-P-96	See Pages A-54-A-56
Flare Retained: 4002-P2-P3 40G15, 40G16	40G11-4	.501 / .489		See Page A-57

Stud Installation

1. Install gasket P/N 40S39 over stud spring cup.

2. Using 4P3 pliers, install stud into grommet following standard procedures. (See Page A-58.)

3. For studs with dash numbers greater than -15, install retaining ring. For procedures see Page A-58

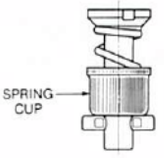

40S37 Stud

Spring cup is color coded black. (See Page 35 for complete dimensions.)

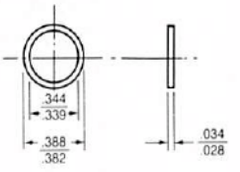

40S39 Stud Gasket

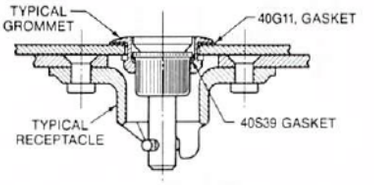

Typical Installation

Choice of receptacle has no effect on sealing capability of stud/grommet assembly.

Notes: *1. Applications using this assembly are limited by the gasket material to 130°F. maximum temperature.*
2. Add .045 inch to "G" thickness to compensate for gasket thicknesses. (See Page A-61.)
3. 40S37 Stud Assemblies are not available with dash numbers smaller than -4.

ANGIC Get quote
Angic Global Solutions 1-888-872-0690
https://www.AngicGlobal.com Sales@AngicGlobal.com

4002 Series. Receptacle Installation Data

Standard Mounting Receptacles

1. Drill #30 (.1285) diameter pilot hole.
2. Drill holes for .125 rivets using drill jig specified.
3. Enlarge pilot hole to X diameter.
4. Rivet receptacle in place.

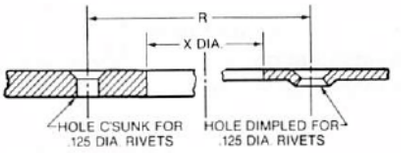

Typical Installation
(Thin panels may be dimpled)

Receptacle	X Dia. (Ref.)	Hole Saw	R Rivet Hole Spacing (Ref.)	Drill Jig
244-22 Series Standard Mount	.812	HS-812	1.375	T22
All Other Standard Mount	.688	HS-687	1.00	T16

Side Mounting Receptacle

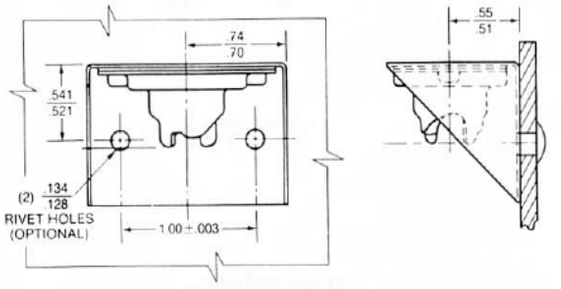

Typical Installation

Snap-In Receptacle (P/N 40R39-1-1AA)

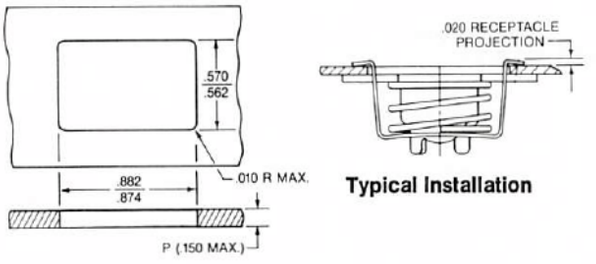

Typical Installation

Panel Preparation

Two piece floating receptacles Spot weld attachment

1. Form through hole to X diameter.
2. Place receptacle element into cage.
3. Locate receptacle assembly on center and spot weld in place.

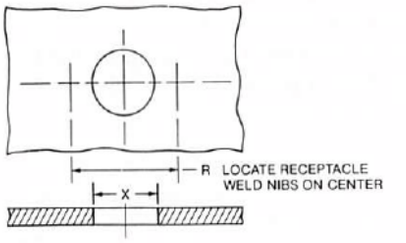

Typical Installation

Receptacle Assembly	X Dia. (Ref.)	R (Ref.)	Hole Saw
1/16" Float Versions 751, 751E/756W, 757W	.687	1.00	HS-687
1/8" Float Versions 701, 701E/706W	.812	1.375	HS-812

Optional Installation Tools

Drill Jigs

Provide convenient means for accurately locating rivet holes relative to receptacle mounting hole.

Drill Jig	A
T16	1.000
T22	1.375

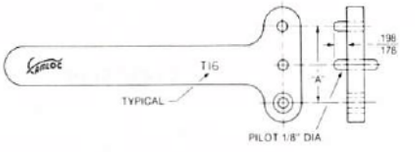

Hole Saws

Accurately size mounting holes.

Hole Saw	Forms Hole Dia.
HS-687	.687
HS-812	.812

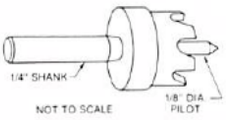

When using hole saw, first drill #30 (.1285) pilot hole.

Get quote
Angic Global Solutions 1-888-872-0690
https://www.AngicGlobal.com Sales@AngicGlobal.com

4002 Series. Ordering Information/ Stud Dash Number Selection

To Select Stud Dash Number

1. Stud dash number varies with receptacle used. This information must be known before proceeding. Select receptacle from Pages A-48 through A-50.
2. Determine "G" thickness.

Notes: (a) Increase "G" to allow for thickness of paint or other finishes and for the compressed thickness of any gasket.

(b) When selecting stud dash number, "G" must be increased for the following "Special" conditions.

"Special" Conditions	Increase "G" Thickness
4002 Series Ejector Spring installed	Add .021 inch
Snap-in Receptacle (P/N 40R 39-1-1AA) installed	Allow .020 inch for receptacle top side protrusion.
40R8 Series Receptacle Shims installed	For each shim used, add an amount equal to "A" max. shim thickness. (See Page A-48)
Plus Flush Grommets installed	For purposes of selecting stud dash number only, add "D" max. protrusion of grommet. (See Pages A-51 and A-52)
40S37 Stud Assembly installed with sealing gaskets	Add .045 inch

3. Locate "G" total thickness in the stud dash number table on the following page.
4. Then find the corresponding stud dash number in the column designated for the receptacle selected.

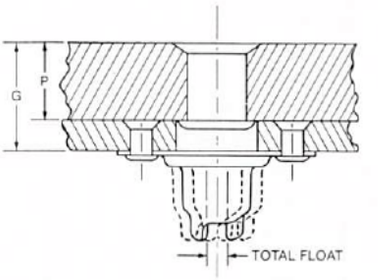

Standard Mount Floating Receptacle

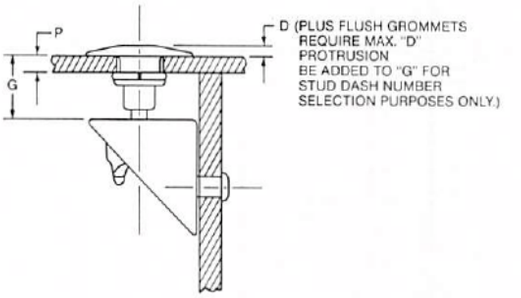

Side Mount Receptacle

How To Order

Example 1.

Stud Assembly Used: 4002-[?]S
"G" Total Thickness: .220 inch
Grommet Used: 4002-0S (Plus Flush Style)
Receptacle Used: 40R17-1
Required Calculation*: G + .029 = .220 + .029 = .249
Stud Dash Number Selected From Table: -7
Completed Part Number: 4002-7S

* (Plus Flush grommets require that "D" max. dimension from Pages A-51 and A-52 be added to "G" total thickness when determining Stud Dash Number).

Example 2.

Stud Assembly Used: 40S5-[?]
"G" Total Thickness: 1.520 inch
Grommet Used: 4002-P2-625 (Flush Style)
Receptacle Used: 244-16E
Stud Dash Number Selected From Table: -51 (See Note 2, Page A-62)
Completed Part Number: 40S5-51

Get quote
Angic Global Solutions 1-888-872-0690
https://www.AngicGlobal.com Sales@AngicGlobal.com

Stud Dash Number Selection Table

Grommeted Studs				Grommetless Studs		
1	2	3	4	5	6	7
"G" Total Thickness	All rec. not tab. at right	All 244-16 ex-16B & -16BR All 244-22	All 244-16B 244-16B-R	All rec. not tab. at right	All 244-16 ex-16B & -16BR All 244-22	All 244-16B 244-16B-R
.021-.050	–	–	-2	–	–	- 2
.051-.080	–	- 2	-3	–	- 2	- 2
.081-.110	- 2	- 3	- 4	- 2	- 2	- 4
.111-.140	- 3	- 4	- 5	- 2	- 4	- 4
.141-.170	- 4	- 5	- 6	- 4	- 4	- 6
.171-.200	- 5	- 6	- 7	- 4	- 6	- 6
.201-.230	- 6	- 7	- 8	- 6	- 6	- 8
.231-.260	- 7	- 8	- 9	- 6	- 8	- 8
.261-.290	- 8	- 9	-10	- 8	- 8	-10
.291-.320	- 9	-10	-11	- 8	-10	-10
.321-.350	-10	-11	-12	-10	-10	-12
.351-.380	-11	-12	-13	-10	-12	-12
.381-.410	-12	-13	-14	-12	-12	-14
.411-.440	-13	-14	-15	-12	-14	-14
.441-.470	-14	-15	-16	-14	-14	-16
.471-.500	-15	-16	-17	-14	-16	-16
.501-.530	-16	-17	-18	-16	-16	-18
.531-.560	-17	-18	-19	-16	-18	-18
.561-.590	-18	-19	-20	-18	-18	-20
.591-.620	-19	-20	-21	-18	-20	-20
.621-.650	-20	-21	-22	-20	-20	-22
.651-.680	-21	-22	-23	-20	-22	-22
.681-.710	-22	-23	-24	-22	-22	-24
.711-.740	-23	-24	-25	-22	-24	-24
.741-.770	-24	-25	-26	-24	-24	-26
.771-.800	-25	-26	-27	-24	-26	-26
.801-.830	-26	-27	-28	-26	-26	-28
.831-.860	-27	-28	-29	-26	-28	-28
.861-.890	-28	-29	-30	-28	-28	-30
.891-.920	-29	-30	-31	-28	-30	-30
.921-.950	-30	-31	-32	-30	-30	-32
.951-.980	-31	-32	-33	-30	-32	-32
.981-1.010	-32	-33	-34	-32	-32	-34
1.011-1.040	-33	-34	-35	-32	-34	-34
1.041-1.070	-34	-35	-36	-34	-34	-36
1.071-1.100	-35	-36	-37	-34	-36	-36
1.101-1.130	-36	-37	-38	-36	-36	-38
1.131-1.160	-37	-38	-39	-36	-38	-38
1.161-1.190	-38	-39	-40	-38	-38	-40
1.191-1.220	-39	-40	-41	-38	-40	-40
1.221-1.250	-40	-41	-42	-40	-40	-42
1.251-1.280	-41	-42	-43	-40	-42	-42
1.281-1.310	-42	-43	-44	-42	-42	-44
1.311-1.340	-43	-44	45	42	-44	44
1.341-1.370	-44	45	-46	-44	44	-46
1.371-1.400	45	-46	-47	-44	-46	-46
1.401-1.430	-46	-47	-48	-46	-46	-48
1.431-1.460	-47	-48	-49	-46	-48	-48
1.461-1.490	-48	-49	-50	-48	-48	-50
1.491-1.520	-49	-50	-51	-48	-50	-50
1.521-1.550	-50	-51	-52	-50	-50	-52

Important Notes: 1. 40S37 stud assemblies are not available with dash numbers smaller than -4. 2. If the total thickness "G" is very near the top of the thickness range, selection of the next greater dash number is recommended. For "G" thicknesses longer than those tabulated, contact Camloc Products Division. 3. "G" min. thickness specified on Pages A-51 and A-52 may be reduc .060 inch when

Get quote
Angic Global Solutions 1-888-872-0690
https://www.AngicGlobal.com Sales@AngicGlobal.com

A

4002 Series.
Weights for Flare Retained Grommets
(Pounds per 100 pieces. All weights are approximate.)

Grommet Dash Numbers	Data Table 1*	Data Table 2*
	40G16-[ ]-1 40G16-[ ]-2 40G16-[ ]S	40G15-[ ] 40G15-[ ]S
- 40	.35	.41
- 70	.36	.41
-100	.38	.42
-130	.39	.43
-160	.40	.44
-190	.42	.46

Grommet Dash Numbers	Data Table 3		
	4002-P2-[ ]	4002-P3-[ ]	4002-P4-[ ] 4002-P4-[ ]A 4002-P4-[ ]B
- 187	0.48	0.49	0.79
- 250	0.51	0.52	0.81
- 312	0.53	0.55	0.84
- 375	0.56	0.58	0.87
- 400	0.57	—	—
- 437	—	0.60	—
- 500	0.62	0.63	0.92
- 625	0.67	0.69	0.98
- 750	0.72	0.74	1.03
- 812	—	0.77	—
- 875	0.78	0.79	1.09
-1000	0.83	0.85	1.14
-1062	—	0.88	—
-1125	0.89	0.90	1.20
-1250	0.94	0.96	1.25
-1375	1.00	1.01	1.30
-1500	1.05	1.07	1.36
-1562	—	1.09	—

** Data Table Numbers Correspond to those listed on Page A-53.*

Get quote
Angic Global Solutions 1-888-872-0690
https://www.AngicGlobal.com Sales@AngicGlobal.com

Extra Heavy-Duty Stud Assemblies and Receptacles

Features: Designed for heavy duty service in farm, construction equipment and other applications where high strength and clamping force are required.

Stud Assemblies

Note: Part numbers shown are basic part numbers only. See ordering information for required dash numbers.

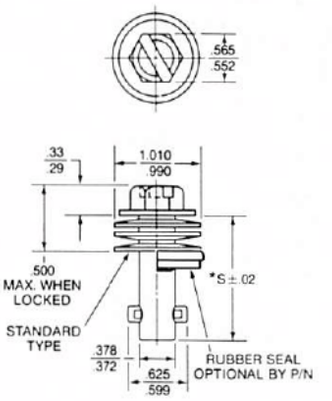

Slotted-Hex Head

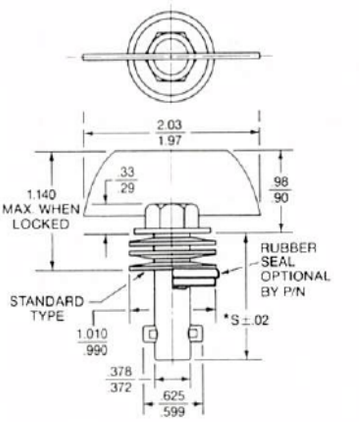

Fixed Wing

Material	Slotted-Hex Head: Standard Part No.	Slotted-Hex Head: Self-sealing Part No.	Fixed Wing: Standard Part No.	Fixed Wing: Self-sealing Part No.
Steel (Cadmium Plated)	91S2-[ ]	91S7-[ ]	91S2-[ ]W	91S7-[ ]W

Maximum Service Temperature: Self-Sealing parts have rubber seal and temperature limitation of 225°F.; Standard: 450°F.; Plastic Knob Version: 140°F.

**S = .64 + (.03 x Dash No.)*

Receptacles

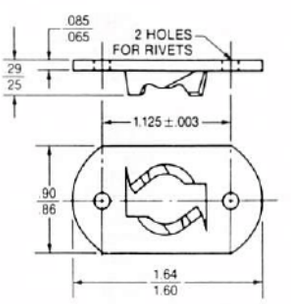

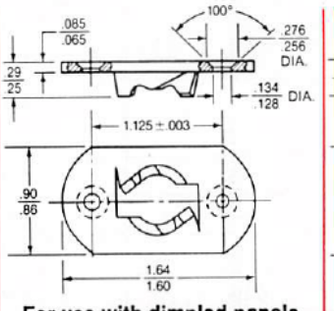

For use with dimpled panels

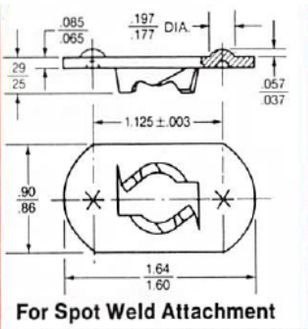

For Spot Weld Attachment

Material	Part No.	Rivet Holes	Rivet Hole Dia.	Part No.	Rivet Holes	Part No.
Steel (Cadmium Plated)	119-18	Plain (for 1/8″ rivets)	.134 / .128	119-18D	C'Sunk (for 1/8″ rivets)	–
	119-18A	Plain (for 5/32″ rivets)	.165 / .159	–	–	–
Steel (Oil Coated)	–	–	–	–	–	119-18C

Maximum Service Temperature: 450°F.

Get quote

Angic Global Solutions 1-888-872-0690
https://www.AngicGlobal.com Sales@AngicGlobal.com

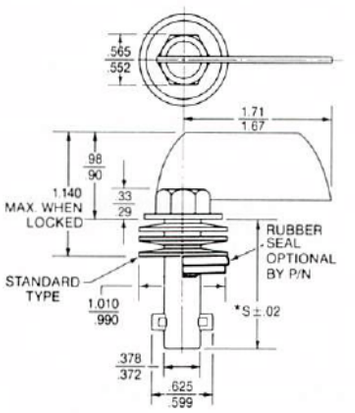

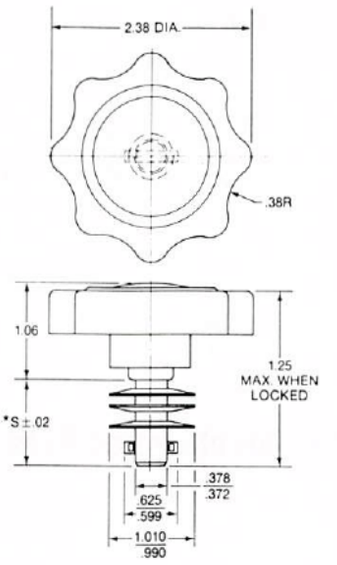

Offset Fixed Wing		Plastic Knob
Standard Part No.	Self-sealing Part No.	Part No.
91S2-[ ]WO	91S7-[ ]WO	91S48-[ ]-1AA

Specifications:

Ultimate Tensile Strength: 1800 lbs.
Working Strength: 1200 lbs.
Stud Grip Increments: .030 inches.

Stud Part Number Structure

91S2-[ ]-WO

- Material and Finish
- Stud Dash Number (Based on Total Thickness, "G")
- Basic Part Number

See Stud Dash Number Selection Table on the following page.

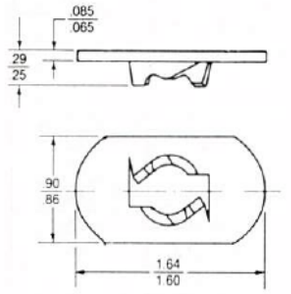

For Weld Attachment
Part No.
–
–
119-18L

Retaining Rings

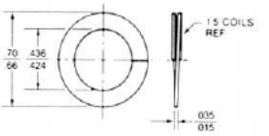

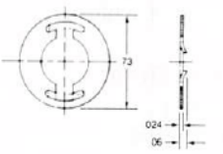

	Spiral Type *Weight per 100 pcs.: 0.24 lbs.*		Snap-on Type *Weight per 100 pcs.: 0.15 lbs.*	
Material	Part No.	Max. Temp.	Part No.	Max. Temp.
Stainless Steel	91S3-1	550°F.	–	–
Steel (Cadmium Plated)	–	–	91S45-1-1AA	450°F.

Spiral Ring offers positive retention. It installs with the use of needle nose pliers.

Snap-on Type snaps into place over stud cross-pin for faster installation.

Get quote

Angic Global Solutions 1-888-872-0690
https://www.AngicGlobal.com Sales@AngicGlobal.com

Panel Preparation and Installation Data

Panel Preparation for Stud Installation

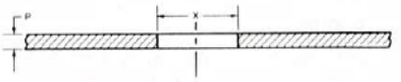

P	X Dia.
Up to .125	.562-.572
.126 & greater	.625-.635

Determine panel thickness "P" and form through hole to corresponding "X" diameter.

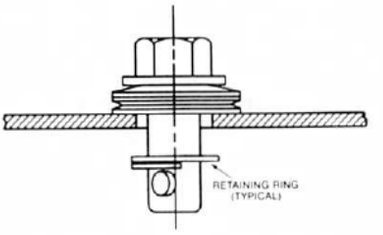

Insert stud through panel and attach retaining ring.

Panel Preparation for Receptacle Installation

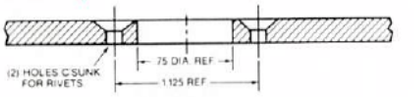

Drilled and Countersunk rivet holes.

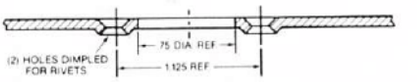

Thin panel dimpled for rivets. (Use receptacle P/N 119-18D.)

Ordering Information/Stud Dash Number Selection

To Select Stud Dash Number:

1. Determine "G" total thickness.

Note: Increase "G" to allow for thickness of paint or other finishes and for the compressed thickness of any gasket. If self-sealing stud assemblies are used, add .120 inch to "G" thickness when determining stud dash number.

2. Locate total thickness in the Stud Dash Number Selection table.

3. Then find the corresponding stud dash number in the column to the right.

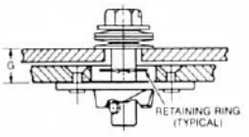

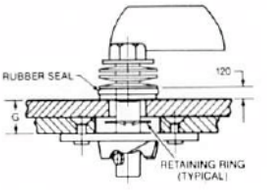

Typical Installations

How to Order:

Example 1.
(For standard stud assemblies)
Stud Assembly Used: 91S2-[?]
"G" Total Thickness = 1.125 inch
Stud Dash Number From Table = -37
Complete Part Number: 91S2-37

Example 2.
(For self-sealing stud assemblies)
Stud Assembly Used: 91S7-[?]WO
"G" Total Thickness = 1.125 inch
Required Calculation: 1.125 + .120 = 1.245
Stud Dash Number From Table = -41
Complete Part Number: 91S7-41WO

Stud Dash Number Selection

Total Thickness	Dash Number	Total Thickness	Dash Number
.035-.064	- 1	.785-.814	-26
.065-.094	- 2	.815-.844	-27
.095-.124	- 3	.845-.874	-28
.125-.154	- 4	.875-.904	-29
.155-.184	- 5	.905-.934	-30
.185-.214	- 6	.935-.964	-31
.215-.244	- 7	.965-.994	-32
.245-.274	- 8	.995-1.024	-33
.275-.304	- 9	1.025-1.054	-34
.305-.334	-10	1.055-1.084	-35
.335-.364	-11	1.085-1.114	-36
.365-.394	-12	1.115-1.144	-37
.395-.424	-13	1.145-1.174	-38
.425-.454	-14	1.175-1.204	-39
.455-.484	-15	1.205-1.234	-40
.485-.514	-16	1.235-1.264	-41
.515-.544	-17	1.265-1.294	-42
.545-.574	-18	1.295-1.324	-43
.575-.604	-19	1.325-1.354	-44
.605-.634	-20	1.355-1.384	-45
.635-.664	-21	1.385-1.414	-46
.665-.694	-22	1.415-1.444	-47
.695-.724	-23	1.445-1.474	-48
.725-.754	-24	1.475-1.504	-49
.755-.784	-25	1.505-1.534	-50

Important Note: *If total thickness is very near the top of the thickness range, selection of the next greater dash number is recommended. For thicknesses greater than those tabulated, contact the Camloc Products Division.*

Stud Part Number Structure

91S2-[ ]-WO

- Material and Finish
- Stud Dash Number (Based on Total Thickness, "G")
- Basic Part Number

Get quote
Angic Global Solutions 1-888-872-0690
https://www.AngicGlobal.com Sales@AngicGlobal.com

Section Contents

	Page No.
15F Series (shown left)	B-2 - B-6
49F Miniature Push-Turn Fastener, Snap-in Stud and Receptacle	B-7
79F Push/Turn Studs & Receptacles	B-8 - B-10
39F/34F Adjustable Fastener	B-11 - B-14
Structural Panel Fasteners	B-15 - B-18

Flush push operated fasteners for panels, drawers & doors

(shown with their simple actuating tools)

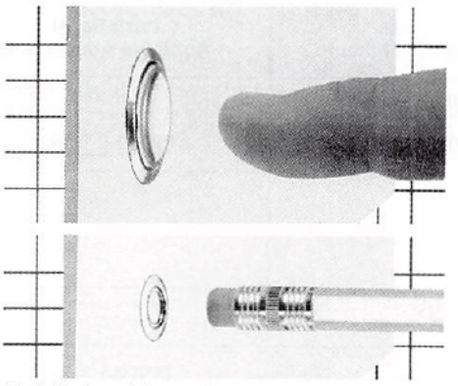

Sleek, flush push-button fasteners enhance the clean design of any modern cabinetry or equipment. Large version operates easily with the push of a finger. Or, to prevent accidental actuation, our compact version operates with the push of a small tool, such as a pencil.

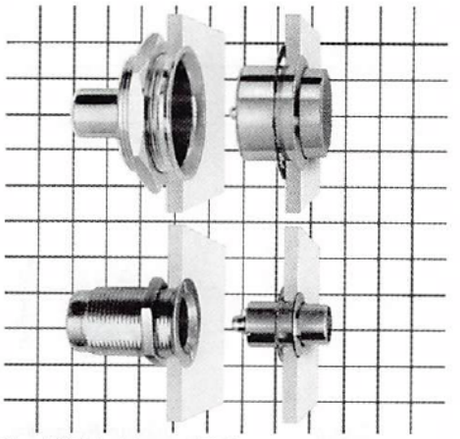

The 15S51 (top) has a 1.12" diameter push-button, big enough for anyone's finger. While the button on the small 15S52 is just a little over 1/4" in diameter.

These two versions along with many others, including completely concealed models, are detailed in our new six page brochure. The full line of 15F Series Push-to-Open/Push-to-Close fasteners provide convenience, quick operation, and very attractive styling for your panels, doors or drawers.

Get quote

Angic Global Solutions 1-888-872-0690
https://www.AngicGlobal.com Sales@AngicGlobal.com

Push Button and Push Panel Stud Assemblies and Receptacles

Features: One push locks. • Next push unlocks. • Push panel versions are concealed when door is closed.

15F Series. Stud Assemblies

Note: Part numbers shown are basic part numbers only. See ordering information for required dash numbers.

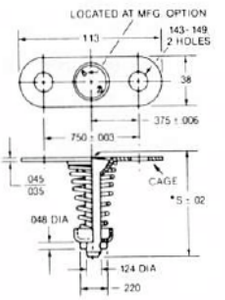

*S = .54 + (.03 x Dash No.)

Push Panel Mechanical Attachment

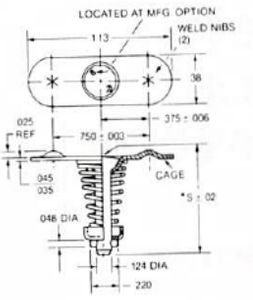

*S = .54 + (.03 x Dash No.)

Push Panel Spot Weld Attachment

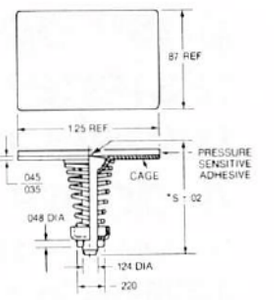

*S = .54 + (.03 x Dash No.)

Push Panel Adhesive Attachment

Material (Finish)	Part No.	Part No.	Part No.
Steel (Cadmium, Clear Chromate)	15S20-[ ]-1AA	15S20-[ ]-2AA	15S20-[ ]-3AA
Steel (Cadmium, Gold Chromate)	—	—	—
Steel (Bright Nickel)	—	—	—
Steel (Black Phosphate)	—	—	—
Steel (Zinc Plated)	15S20-[ ]-1AC	—	15S20-[ ]-3AC
Steel (Cadmium, Clear Chromate) Except cage has no finish	15S20-[ ]-1AB	15S20-[ ]-2AB	15S20-[ ]-3AB
Brass and Steel (Chromium)	—	—	—
Brass and Steel (Black Oxide)	—	—	—

Note: *All push panel versions shown here have stud pins which are free to swivel in retainer cage. This feature helps compensate for misalignment between door and substructure.*

Receptacle Retaining Nuts and Push-on Retainer

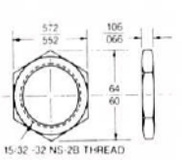

Retaining Nut, Solid

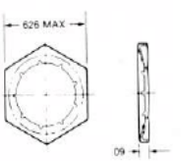

Retaining Nut, Sheet Metal

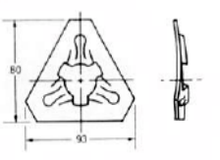

Push-on Retainer

Material (Finish)	Part No.	Weight (per 100 pcs.) (lbs.)	Part No.	Weight (per 100 pcs.) (lbs.)	Part No.	Weight (per 100 pcs.) (lbs.)
Steel (Cadmium, Clear Chromate Plated)	15R10-1AC	0.23	—	—	—	—
Steel (Cadmium, Gold Chromate Plated)	15R10-1AD		—	—	—	—
Steel (Zinc Plated)	—	—	—	—	15R16-1-1AA	0.25
Steel (Zinc Plated, Clear Chromate)	—	—	99N10-01A1	0.13	—	—

All specifications in inches unless otherwise specified.

Contact the Camloc Products Division for par weights not specified here.

Get quote

Angic Global Solutions 1-888-872-0690
https://www.AngicGlobal.com Sales@AngicGlobal.com

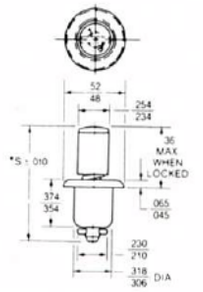

*S = .88 + (.03 x Dash No.)

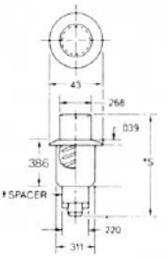

*S = .60 + (.03 x Dash No.)

Push Button	Flush Push Button
Part No.	Part No.
15S1-[ ]-1AC	—
15S1-[ ]-1AF	—
15S1-[ ]-1AD	—
15S1-[ ]-1AG	—
—	—
—	—
—	15S52-[ ]-1AA
—	15S52-[ ]-1AB

†Spacer: For stud dash no. 1 and 2 none required.
For stud dash no. 3 through 8 material nylon.
For stud dash no. 9 through 20 material brass, finish nickel plated.

Stud Retaining Ring

(For 15S1 and 15S52 Push Button Studs Only)

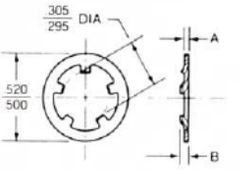

Part No.	Material (Finish)	A	B
15S11-1AC	Steel (Cadmium, Clear Chromate)	.013 .007	.030
15S11-1AD	Steel (Cadmium, Gold Chromate)	.013 .007	.030
15S11-2AE	Steel (Cadmium, Olive Drab Chromate)	.018 .012	.035

Weight per 100 pcs.: 0.05 lbs.

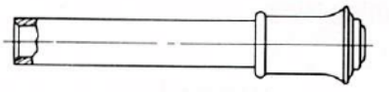

Installation Tool
For Stud Retaining Ring, P/N T107-1.

Stud Part Number Structure

15S20-[ ]-1AA

- Finish
- Material
- Stud Dash Number (Based on Total Thickness, "G")
- Basic Part Number

Stud Dash Number Selection Tables on Page B-6.

15R1 Receptacles

Used with all 15F Series stud assemblies in table above.

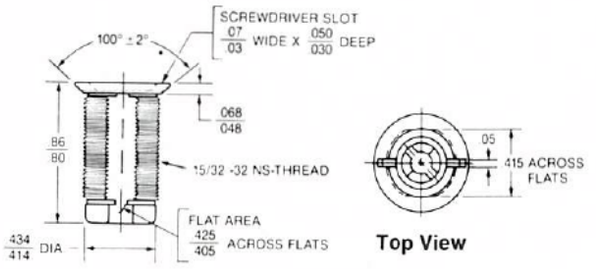

Top View



Installation Tool for Push-on Retainer, P/N T147-1-1AA.

Material (Finish)	Part No.
Zinc (Zinc, Clear Chromate Plated)	15R1-1AC
Zinc (Zinc, Gold Chromate Plated)	15R1-1AE
Zinc (Black Phosphate)	15R1-1AG

Weight per 100 pcs.: 0.99 lbs.

Get quote
Angic Global Solutions 1-888-872-0690
https://www.AngicGlobal.com Sales@AngicGlobal.com

Large Flush Push Button Version

The studs and receptacle on this page are designed as a system and are not interchangeable with other studs or receptacles in the 15F Series.

Stud Assemblies

Note: Part numbers shown are basic part numbers only. See ordering information.

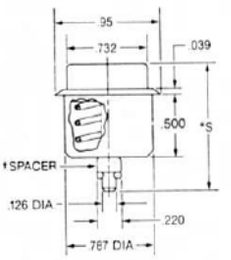

$S = .77 + (.03 \times \text{Dash No.})$

Material (Finish)	Part No.
Brass and Steel (Chromium)	15S51-[ ]-1AA
Brass and Steel (Black Oxide)	15S51-[ ]-1AB

†Spacer: For stud dash no. 1 through 4 none required. For stud dash no. 5 through 10 material nylon.

Stud Retaining Ring

Material (Finish)	Part No.
Steel (Black Phosphate)	15S47-1-1AA

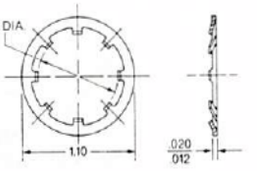

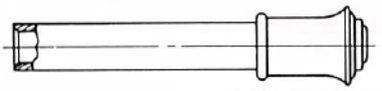

Installation Tool For Stud Retaining Ring, P/N T106-1.

Receptacle

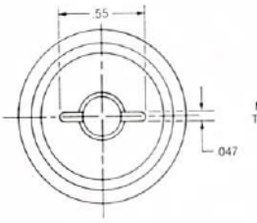

Top View

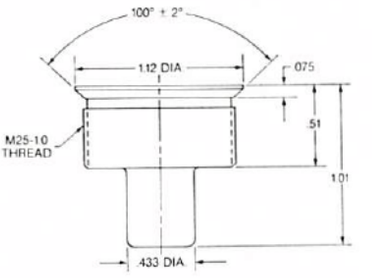

Material (Finish)	Part No.
Brass (Nickel Plated)	15R5-1-1AA
Brass (Zinc Plated, Clear Chromate)	15R5-1-1AB

Receptacle Retainer Nut

Material (Finish)	Part No.
Zinc (Zinc-Plated, Clear Chromate)	15R4-1-1AB
Zinc (Nickel-Plated)	15R4-1-1AA

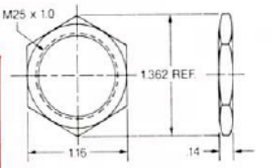

Contact the Camloc Products Division for receptacle and retainer nut available in Brass (Nickel Plated) material.

15S51 Series. Panel Preparation and Installation Data

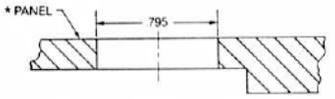

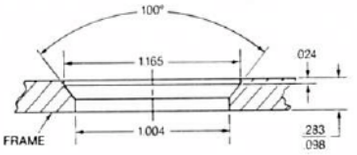

*Panel with thickness greater than .313 (8.0) must be back counterbored to a concentric 1.181 (30.0) dia. with a remaining maximum material thickness of .314 (8.0).

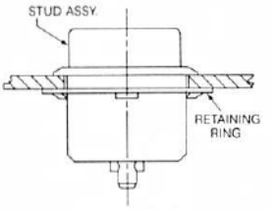

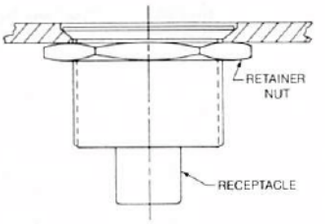

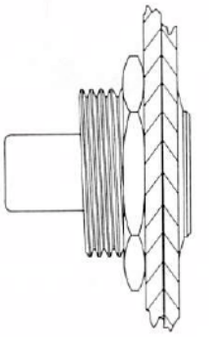

15S51 in locked position

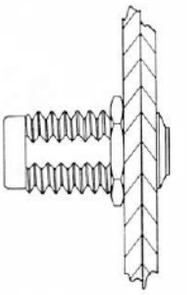

15S52 in locked position

Get quote

Angic Global Solutions 1-888-872-0690
https://www.AngicGlobal.com Sales@AngicGlobal.com

Panel Preparation and Installation Data

Panel Preparation For Studs

Push Button Version

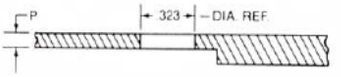

Determine panel thickness "P" and form through hole to .323 inch diameter.

Note: Panels with thickness greater than .188 inch must be back counterbored to a concentric .625 diameter with a remaining maximum material thickness of .188 inch.

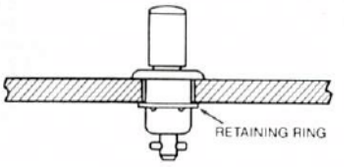

Insert stud through panel and attach retaining ring.

Push Panel Version/ Mechanical Attachment

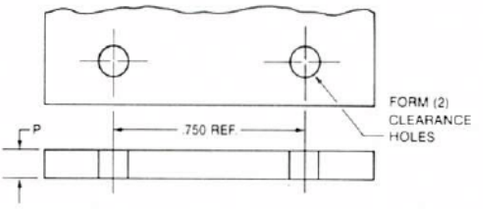

Locate centers and drill or punch holes for fastening method selected.

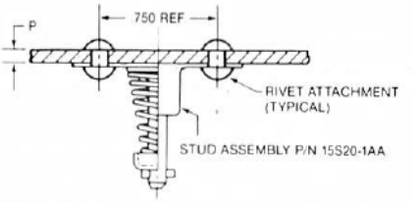

Install with 9/64 rivets or #6 size machine screws. Sheet metal or wood screws can also be used as appropriate.

Push Panel Version/ Adhesive Attachment

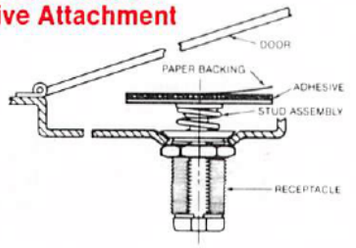

Installation using adhesive backed stud assembly.

Push stud assembly into installed receptacle until stud assembly locks in place. Then peel off paper backing and close door. Apply pressure to affix adhesive. Stud assembly is now installed.

Push Panel Version/Spot Weld Attachment

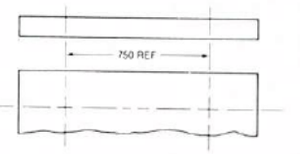

Locate centers and spot weld in place.

Required Clearance

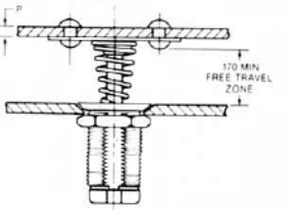

Typical Installation, Locked Position.

Push panel stud assemblies require clearance to allow .170 inch free travel in order to function. Soft gaskets may be used provided "P" panel can move .170 inch minimum before full compression is reached.

Note: For short length studs -6 and -7, spot weld or adhesive attachment is recommended to insure that free travel zone is maintained.

Panel Preparation For Receptacles

Flush Installation

Drilled Panel

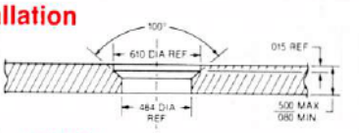

Threaded Installation

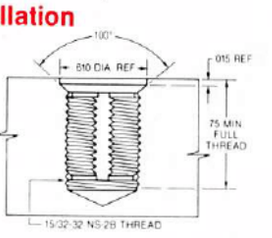

Dimpled Panel

Drill .406 dia. hole then form to shape illustrated.

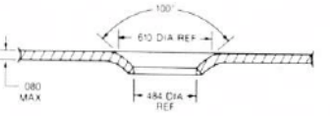

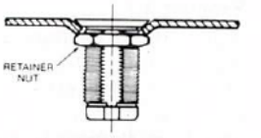

Typical Flush Installation

Protruding Installation



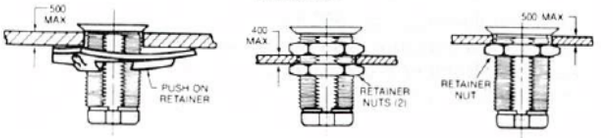

B

Get quote
Angic Global Solutions 1-888-872-0690
https://www.AngicGlobal.com Sales@AngicGlobal.com

Ordering Information/Stud Dash Number Selection

To Select Stud Dash Number

1. Determine "G" thickness.

Note: Increase "G" to allow for thickness of paint or other finishes.

2. Add .015 inch to "G".
3. Locate "G" + .015" in table.
4. Note corresponding stud dash number.

For Push Button Version

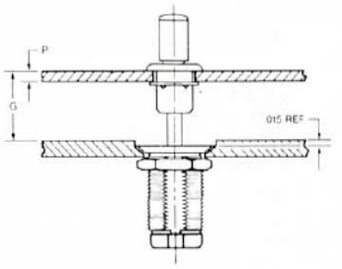

Stud Dash Number Selection	
G + .015	Dash No.
.030-.089	- 1
.090-.149	- 3
.150-.209	- 5
.210-.269	- 7
.270-.329	- 9
.330-.389	-11
.390-.449	-13
.450-.509	-15
.510-.569	-17
.570-.629	-19
.630-.689	-21
.690-.749	-23
.750-.809	-25

Important Note: *If the thickness "G + .015" is very near the top of the thickness range, selection of the next greater dash number is recommended. For "G + .015" thicknesses longer than those tabulated, contact the Camloc Products Division.*

For Push Panel Versions

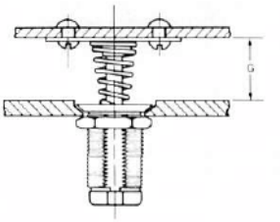

Mechanical and Spot Weld Attachment

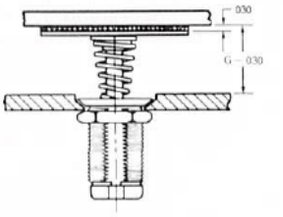

Adhesive Attachment

Stud Dash Number Selection	
G + .015	Dash No.
.18-.22	- 6*
.21-.25	- 7*
.24-.28	- 8
.27-.31	- 9
.30-.34	-10
.33-.37	-11
.36-.40	-12
.39-.43	-13
.42-.46	-14
.45-.49	-15

Important Note: *If the thickness "G + .015" is very near the top of the thickness range, selection of the next greater dash number is recommended. For "G + .015" thicknesses longer than those tabulated, contact the Camloc Products Division.*

**Spot weld or adhesive attachment is recommended when using -6 and -7 stud assemblies.*

How to Order

Example 1.
(For 15S1 push button versions)
Stud Assembly Used: 15S1-[?]-1AC
"G" Total Thickness = .455 inch
Required Calculation: .455 + .015 = .470
Stud Dash Number From Table = -15
Complete Part Number: 15S1-15-1AC

Example 2.
(For 15S20 push panel versions)
Stud Assembly Used: 15S20-[?]-1AA
"G" Total Thickness = .350 inch
Required Calculation: .350 + .015 = .375 or .38
Stud Dash Number From Table = -12
Complete Part Number: 15S20-12-1AA

15S51 and 15S52 Stud Dash Number Selection

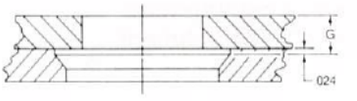

G = PANEL + .024

Stud Dash Number Selection	
"G" Total Thickness	Stud Dash Number
.047-.079	-1
.079-.110	-2
.110-.142	-3
.142-.173	-4
.173-.205	-5
.205-.236	-6
.236-.268	-7
.268-.299	-8
.299-.331	-9
.331-.362	-10

Note: *If the total thickness "G," is very near the top of the thickness range, selection of the next greater dash number is recommended. For "G" thicknesses longer than those tabulated, contact the Camloc*

Get quote
Angic Global Solutions 1-888-872-0690
https://www.AngicGlobal.com Sales@AngicGlobal.com

Miniature Push-Turn Fastener

Fast installation with snap-in stud and snap-in receptacle.

- Snaps into pre-punched holes in panel and frame.
- Positive action.
- Suitable for panels to .078" thick.
- Decorative plastic housing.

The 49F is the most economical, high quality miniature fastener you can buy...yet it offers all the advantages of positive, dependable action plus pleasing, cosmetic appearance. Its snap-in stud and snap-in receptacle make it quick and easy to install. And it's just as easy to operate. It closes with a push and opens with a simple ¼ turn, in either direction.

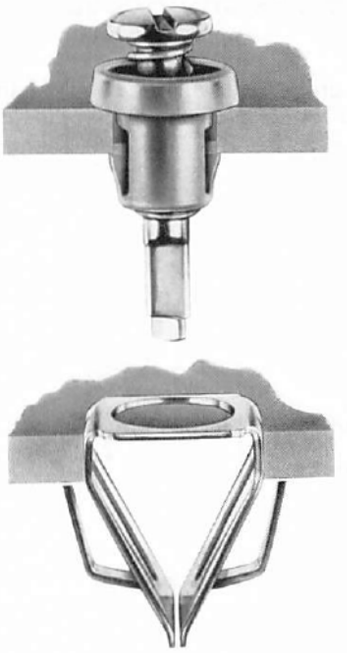

B

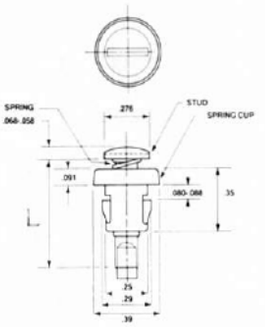

MINIATURE PUSH/TURN STUD ASSEMBLIES

Grip Thickness*	L Dim.	Material/Finish: CRES, Passivated Grey Plastic Cup
.020 – .050	.634	49S06-1-1BD
.051 – .081	.665	49S06-2-1BD
.082 – .113	.697	49S06-3-1BD
.114 – .144	.728	49S06-4-1BD

*See installation data to determine proper grip thickness and stud dash no. All dimensions are nominal.

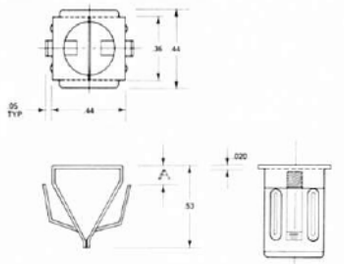

-3 Receptacle shown above

Design and performance data subject to change without notice

MINIATURE PUSH/TURN RECEPTACLE ASSEMBLIES

Material	Receptacle	"A" Dimension	Frame Thickness
Stainless Steel (Passivated)	49R02-1-1AA	.079 .071	.048 .032
	49R02-2-1AA	.106 .098	.075 .051
	49R02-3-1AA	.146 .138	.110 .079



STANDARD MOUNT

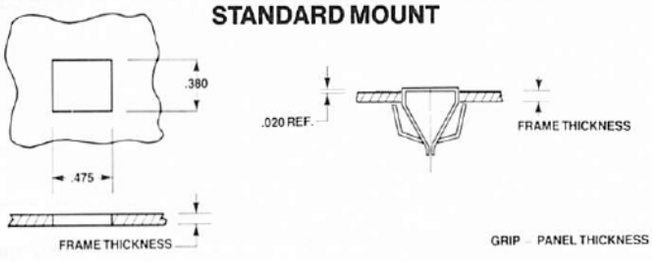

FLUSH MOUNT

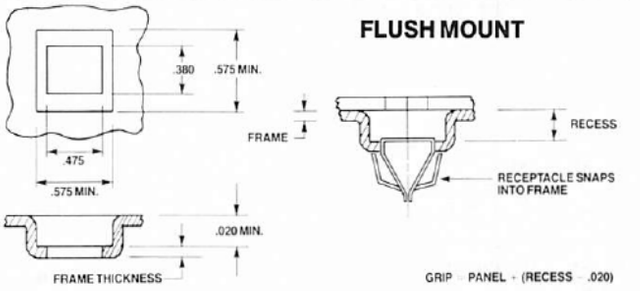

Stud Panel Preparation and Installation Data

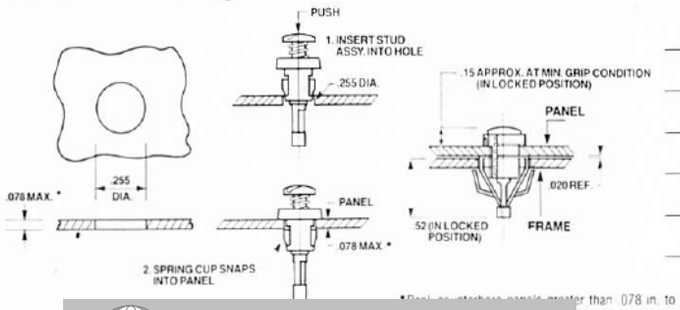

Stud Grip Length Selection

Grip	Dash No.
.020 – .050	1
.051 – .081	2
.082 – .113	3
.114 – .144	4

*Panel thickness greater than .078 in. to remaining .75 in. min. dia.

ANGIC GLOBAL SOLUTIONS Get quote
Angic Global Solutions 1-888-872-0690
https://www.AngicGlobal.com Sales@AngicGlobal.com

Push/Turn Studs and Receptacles

Features: Securely locks with the push of a thumb. • To unlock, a 1/4-turn is all that's required in either direction. • No special tools. • Cannot be disengaged accidentally. • Snap-in version permits high-speed assembly.

Stud Assemblies

Note: Part numbers shown are basic part numbers only. See ordering information for required dash numbers.

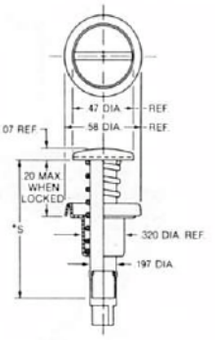

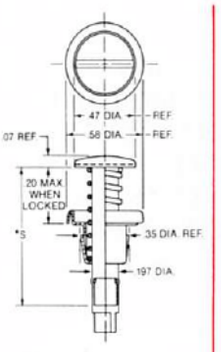

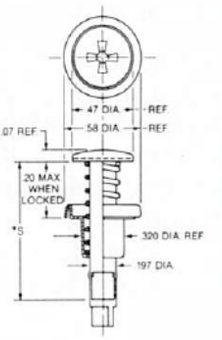

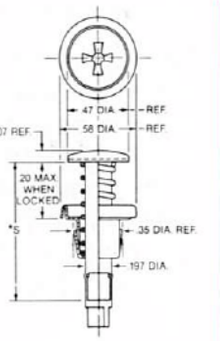

	Slotted Recess	Slotted Recess	Cross Recess	Cross Recess
Material	Standard** (With Retaining Ring)	Snap-in Version	Standard** (With Retaining Ring)	Snap-In Version
Steel (Zinc Plated, Clear Chromate)	79S01-[ ]-1AA	79S01-[ ]-[ ]AA	79S05-[ ]-1AA	79S05-[ ]-[ ]AA
Steel (Cadmium Plated, Yellow Chromate)	79S01-[ ]-1AB	79S01-[ ]-[ ]AB	79S05-[ ]-1AB	79S05-[ ]-[ ]AB
Steel (Bright Chrome Plated)	79S01-[ ]-1AC	79S01-[ ]-[ ]AC	79S05-[ ]-1AC	79S05-[ ]-[ ]AC

*S = .6885 + (.0394 x Dash No.)
**Order retaining ring separately.

Receptacles

Standard Mount Receptacle
79R01 Series

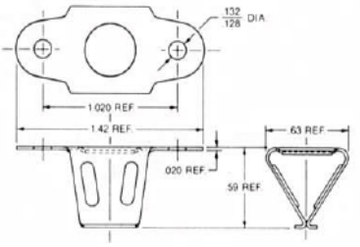

Front Loading Snap-in Version
Installs with ordinary thumb pressure.
79R02 Series

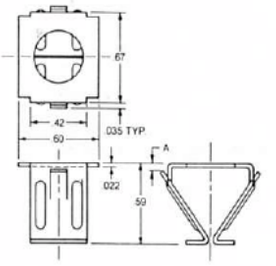

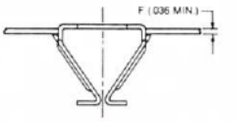

Typical Installation

Material	Part No.	Part No.
Steel (Zinc Plated, Clear Chromate)	79R01-1-1AA	79R02-[ ]-1AA
Steel (Cadmium Plated)	79R01-1-1AB	79R02-[ ]-1AB

Weight per 100 pieces: .95 lbs. (approximate)

Weight per 100 pieces: .50 (approximate)

Receptacle Dash Number Selection		
F	A	Dash Numbers
.048 / .036	.080 / .070	-1
.075 / .054	.106 / .096	-2
.120 / .090	.150 / .140	-3

To Select Snap-in Receptacle Dash Number.
1. Determine "F" thickness.
2. Locate "F" thickness in table.
3. Find the corresponding dash number to the right.

How to Order:
"F" Thickness = .062
Receptacle Selected: 79R02-[?]-1AA
Dash Number From Table: -2
Complete Part Number: 79R02-2-1AA

Get quote
Angic Global Solutions 1-888-872-0690
https://www.AngicGlobal.com Sales@AngicGlobal.com

	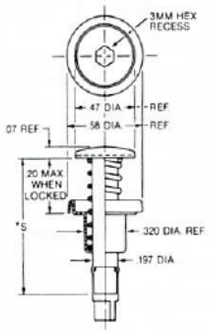	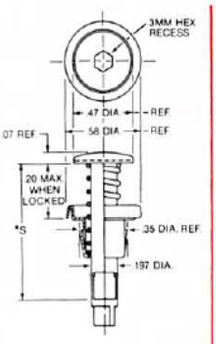
	Hex Recess	**Hex Recess**
	Standard * * (With Retaining Ring)	Snap-in Version
	79S07-[ ]-1AA	79S07-[ ]-[ ]AA
	79S07-[ ]-1AB	79S07-[ ]-[ ]AB
	79S07-[ ]-1AC	79S07-[ ]-[ ]AC

Stud Part Number Structure

79S01-[ ]-[ ]-AA

- Stud Cup Dash Number (For snap-in styles only) (Based on Panel Thickness, "P")
- Stud Dash Number (Based on Total Thickness, "G")
- Basic Part Number

Retaining Ring

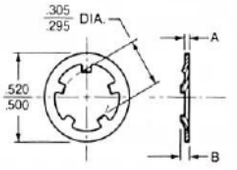

Part No.	Material	A	B	Weight
15S11-1AC	Steel (Cadmium, Clear Chromate)	.013 .007	.030	.030
15S11-1AD	Steel (Cadmium, Gold Chromate)	.013 .007	.030	
15S11-2AE	Steel (Cadmium, Olive Drab Chromate)	.018 .012	.035	.045

Weights are in pounds per 100 pieces.

Retaining Ring Tool,

Part No. T107-1

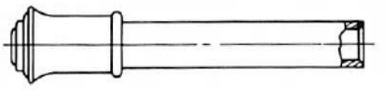

See Ordering Information, Stud and Stud Cup Dash Number Selection on the following page.

ANGIC GLOBAL SOLUTIONS Get quote
Angic Global Solutions 1-888-872-0690
https://www.AngicGlobal.com Sales@AngicGlobal.com

Panel Preparation and Installation Data

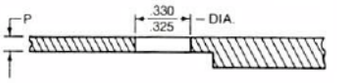

Form through hole to .325-.330 diameter. Panels with thickness greater than .134 inch must be back counterbored to a concentric .590 inch diameter with a remaining material thickness of .134 inch max.

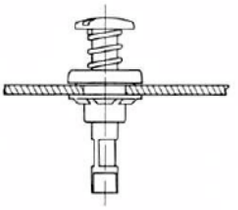

For retaining ring installation, insert stud through panel and attach retaining ring.

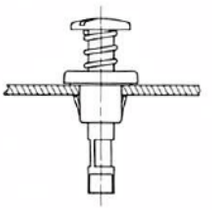

For snap-in style, place stud assembly on hole and push down to snap into place.

Frame Preparation for Receptacle Installation.

Standard Mount Receptacle

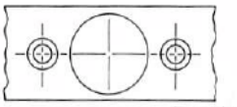

Top View

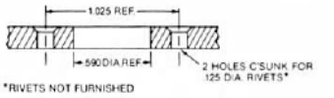

Side View

Snap-in Receptacle

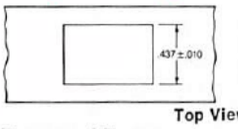

Top View

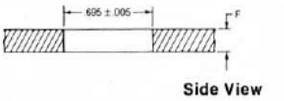

Side View

Recessed Frame
Dimple frame as shown below to eliminate .023 inch snap-in receptacle protrusion.

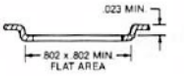

Ordering Information/Stud and Stud Cup Dash Number Selection

To Select Stud Dash Number.

1. Determine "G" thickness.

Notes: (a) Increase "G" to allow for thickness of paint or other finishes and for the compressed thickness of any gasket.

2. Locate "G" thickness in the table.

3. Then find the corresponding stud dash number.

4. When using snap-in style stud assemblies, specify the stud cup dash number corresponding to top panel thickness "P".

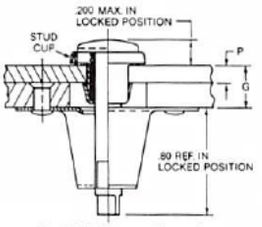

Standard Mount Version

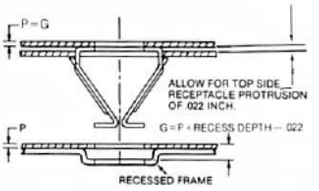

Snap-in Version

How to Order:

Example 1.
(For stud assemblies using retaining ring)
Stud Assembly Used: 79S01-[?]-1AA
"G" Total Thickness = .160 inch
Stud Dash Number From Table = -4
Complete Part Number: 79S01-4-1AA

Example 2.
(For snap-in style stud assemblies)

Stud Part Number Structure

79S01-[ ]-[ ]-AA

- Stud Cup Dash Number (For snap-in styles only) (Based on Panel Thickness, "P")
- Stud Dash Number (Based on Total Thickness, "G")
- Basic Part Number

"G" Total Thickness = .160 inch
Stud Dash Number From Table = -4
"P" Panel Thickness = .068 Inch
Stud Cup Dash Number From Table = -3
Complete Part Number: 79S01-4-3AA

Stud Cup Dash Number Selection	
P Max.	Dash Numbers
.065	-2
.099	-3
.133	-4

Stud Dash Number Selection	
*G Thickness	Dash Numbers
.039-.078	- 1
.079-.118	- 2
.119-.157	- 3
.158-.196	- 4
.197-.236	- 5
.237-.275	- 6
.276-.314	- 7
.315-.354	- 8
.355-.393	- 9
.394-.433	-10

***Important Notes:**
1. If the total thickness "G" is very near the top of the thickness range, selection of the next greater dash number is recommended. For "G" thickness longer than those tabulated, contact the Camloc Products Division.

Get quote
Angic Global Solutions 1-888-872-0690
https://www.AngicGlobal.com Sales@AngicGlobal.com

Extra Heavy Duty Stud Assemblies and Receptacles

(39F Series shown below; 34F Series shown on following page.)

Features: Capable of carrying high tensile loads and resisting mechanical damage under severe service conditions. • A unique adjustable cross pin allows variable clamping loads and provides the ability to compensate for variations in joint thickness as well as gasket set.

39F Series Stud Assemblies

Note: Part numbers shown are basic part numbers only. See ordering information for required dash numbers.

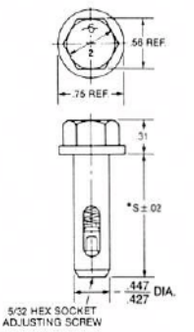

*S = 1.11 + (.25 x Dash No.)
Hex Head

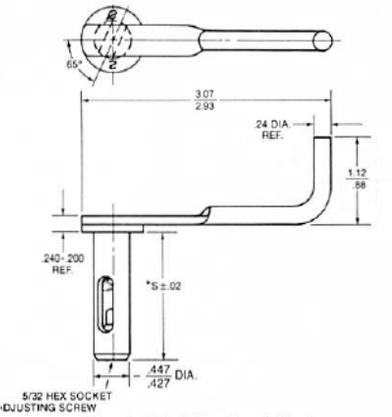

*S = 1.11 + (.25 x Dash No.)
Handle Operated

Material	Part No.	Part No.
Steel (Cadmium Plated)	39S01-[ ]-1AA	39S08-[ ]-1AA

Maximum Service Temperature: 450°F.

39F Series Receptacles

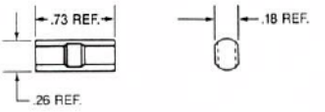

Cross Pin

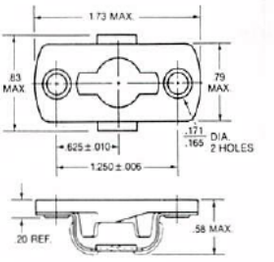

Receptacle

Material	Part No.	Weight (per 100 pcs.) (lbs.)	Part No.	Type	Weight (per 100 pcs.) (lbs.)
Steel (Cadmium Plated)	39S02-1-1AA	0.78	39R01-1-1AA	Rivet	4.89
Steel	—	—	39R01-1-1AB	Weld	

Specifications: Ultimate Tensile Strength: 39F Series – 5000 lbs., 34E Series – 10000 lbs. Stud Grip Increments: .250 inch (39F and 34F). For other styles, materials or finishes, please contact the Camloc Products Division.

Get quote
Angic Global Solutions 1-888-872-0690
https://www.AngicGlobal.com Sales@AngicGlobal.com

Extra Heavy Duty Stud Assemblies and Receptacles

(continued)
(39F Series shown on previous page; 34F Series shown below.)

34F Series Stud Assemblies

Note: Part numbers shown are basic part numbers only. See ordering information for required dash numbers.

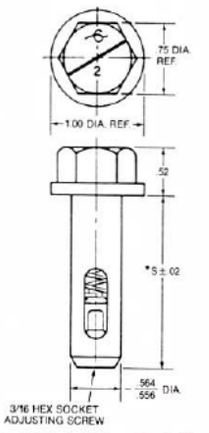

*S = 1.37 + (.25 x Dash No.)
Hex Head

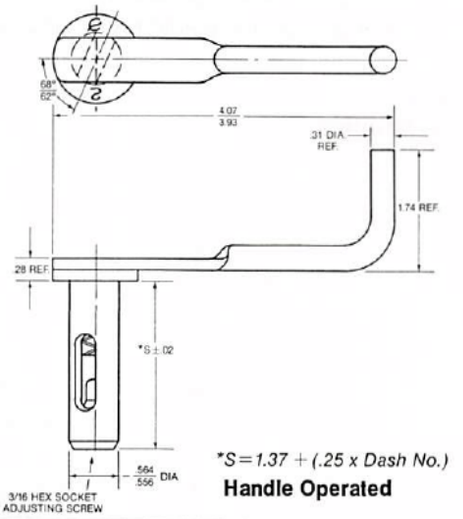

*S = 1.37 + (.25 x Dash No.)
Handle Operated

Material	Part No.	Part No.
Steel (Cadmium Plated)	34S01-[ ]-1AA	34S08-[ ]-1AA

Maximum Service Temperature: 450°F.

34F Series Receptacles

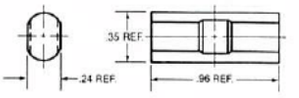

Cross Pin

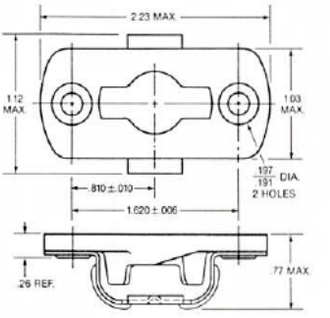

Receptacle

Material	Part No.	Weight (per 100 pcs.) (lbs.)	Part No.	Type	Weight (per 100 pcs.) (lbs.)
Steel (Cadmium Plated)	34S02-1-1AA	2.03	34R01-2-1BA	Rivet	10.50
Steel	—	—	34R01-2-1BB	Weld	

Stud Ejector Assembly/Components

(For use with 39F Series Stud Assemblies only)

Component	Part No.	D Ref.	L	Weight (per 100 pcs.) (lbs.)	Material/ Finish	Max. Temp.
Spring	39S09-1-1AA	.52	2.08	0.40	Steel (Cadmium Plated)	450°F.
Cup	39S10-1-1AA	.75	.291 / .284	0.50		

Components

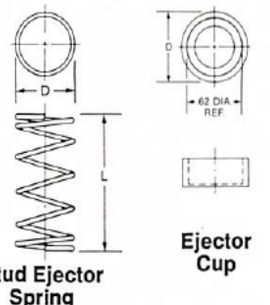

Stud Ejector Spring

Ejector Cup

Get quote
Angic Global Solutions 1-888-872-0690
https://www.AngicGlobal.com Sales@AngicGlobal.com

Panel Preparation and Installation Data

Panel Preparation for Studs

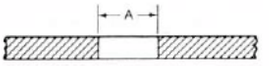

Panel Preparation for Receptacle

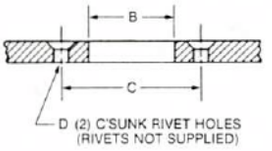

Dimensions For Panel Preparation					
Series	A Dia. Ref.	B Dia. Ref.	C Ref. Rivet Spacing	D Dia. Ref.	C'Sink
39F	.531	.78	1.250	.156	For 5/32" Rivets
34F	.688	1.020	1.620	.188	For 3/16" Rivets

Installing Weld Type Receptacle

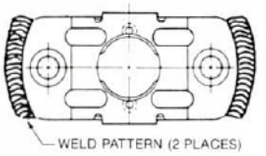

Locate receptacle on center and weld in place as shown above.

Installing Stud

1. Insert stud through panel.
2. Using cross pin installation tool listed below, install cross pin.
3. When installation tool is pushed completely through stud, cross pin is automatically locked in place and stud is captivated to panel.

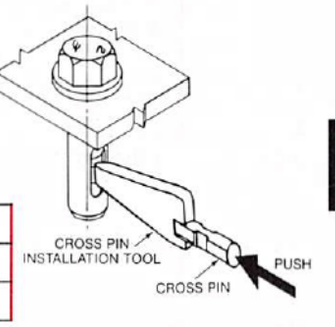

Installation Tools:	
For 39F	T137-1-1AA
For 34F	T135-1-1AA

Cross Pin Adjustment

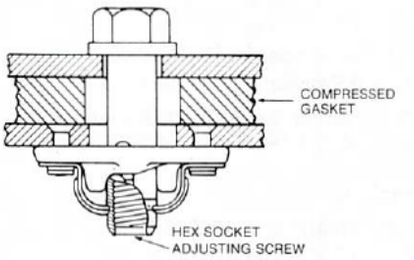

Adjust pin by rotating adjusting screw with hex key to achieve desired grip or compression load. Adjustment can be accomplished with the assembly locked and loaded.

Important Note: *If the 39F/34F Series is to be used without gaskets, a spring element must be introduced to the joint. Contact the Camloc Products Division for additional information.*

Installation (39F Series only)

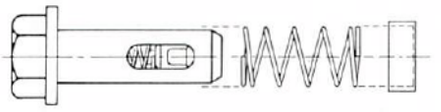

1. Install spring over stud followed by spring cup.
2. Place assembly in panel and install cross pin to captivate.

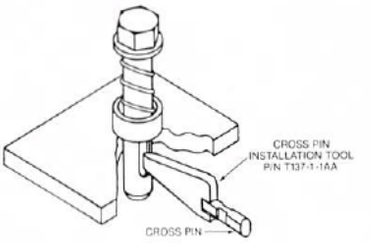

Get quote
Angic Global Solutions 1-888-872-0690
https://www.AngicGlobal.com Sales@AngicGlobal.com

Ordering Information/Stud Dash Number Selection

To Select Stud Dash Number

1. Determine "G" thickness.

Note: Increase "G" to allow for thickness of paint or other finishes and for the compressed thickness of any gasket. When using ejector for 39F Series Studs, add .32 inch to "G" to determine stud dash number.

2. Locate "G" total thickness in the table below.

3. Then find the corresponding stud dash number in the column to the right.

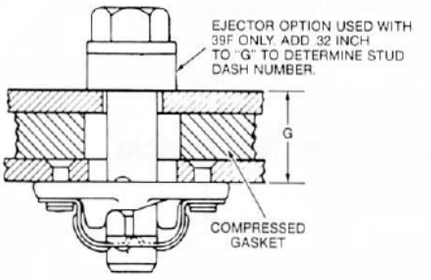

How to Order:

Example 1.

Stud Assembly Used: 39S01-[?]-1AA
"G" Total Thickness = .825 inch
Stud Dash Number From Table = -3
Complete Part Number: 39S01-3-1AA

(Note: If ejector is used, add .32 inch to "G": .825 + .32 = 1.145. Select -4 from table.)

Example 2.

Stud Assembly Used: 34S08-[?]-1AA
"G" Total Thickness = .750 inch
Stud Dash Number From Table = -3
Complete Part Number: 34S08-3-1AA

Stud Dash Number Selection	
"G" Total Thickness	Dash No.
.250-.499	-1
.500-.749	-2
.750-.999	-3
1.000-1.249	-4

Stud Weights

Stud Weights (pounds per 100 pieces)				
Stud Dash Number	34S01-[ ]-1AA	34S08-[ ]-1AA	39S01-[ ]-1AA	39S08-[ ]-1AA
-1	14.70	21.21	6.35	8.40
-2	16.40	22.31	7.45	9.43
-3	18.20	*	8.45	10.46
-4	19.90	*	9.55	11.49

*Contact the Camloc Products Division for availability.

Get quote
Angic Global Solutions 1-888-872-0690
https://www.AngicGlobal.com Sales@AngicGlobal.com

KM Series. Fastener Selection

Features: Simple. • Low-cost. • Quick operating. • Designed for hand installation and operation. • Absorbs shock and vibration. • Ideal for sheet metal panel applications.

May be ordered assembled or components may be ordered separately.
Grip Thickness: .250 max.

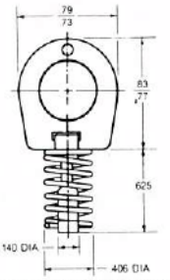

(Steel Handle Illustrated)

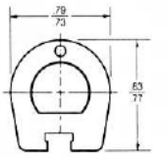

(Plastic Handle Illustrated)

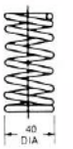

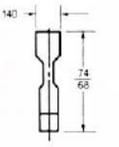

Material	Assembled Fastener	Handle	Spring	Clip
	Part No.	Part No.	Part No.	Part No.
Steel	*KM921-1	KM918-1	KM920-1	KM919-1
Plastic, White	**KM1049-1-1AA	KM1050-1-1AA	—	—
Plastic, Black	**KM1049-1-1AB	KM1050-1-1AB	—	—

*Weights: *.83 lbs., **.63 lbs., (per 100 pcs.)*

For medium-duty use with folding handle.

All unassembled components may be ordered with part number KM1040-1-1AA or components may be ordered separately.
Weight: 2.55 lbs., (per 100 pcs.)

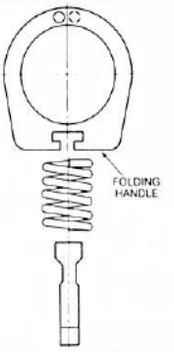

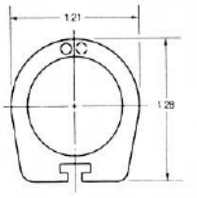

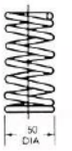



Material	Complete Fastener Unassembled	Handle	Spring	Clip
	Part No.	Part No.	Part No.	Part No.
Steel	KM1040-1-1AA	KM1042-1-1AA	KM640	KM1041-1-1AA

For heavy-duty use with rigid handle.

May be ordered assembled or components may be ordered separately.
Grip Thickness: .600 max.
Weight: 4.14 lbs., (per 100 pcs.)

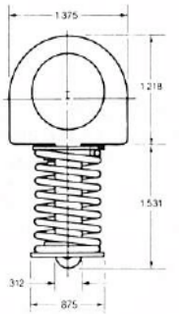

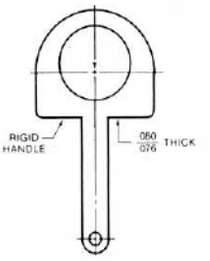

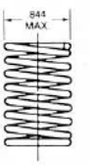



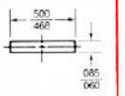

Material	Assembled	Handle	Spring	Washers (2 per assembly)	Cross Pin
	Part No.	Part No.	Part No.	Part No.	Part No.
Steel	KM660	KM628	KM630	KM631	KM638

Get quote
Angic Global Solutions 1-888-872-0690
https://www.AngicGlobal.com Sales@AngicGlobal.com

KM Series. Panel Preparation and Installation Data.

Outer Panel Preparation Optional Hole Shapes

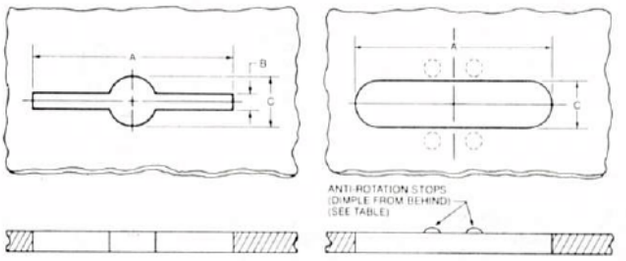

Select desired hole shape and form through hole as shown.

Important Note: Centerline of outer panel hole must be congruent with centerline of substructure hole (small diameter) when outer panel is in closed position.

Dimensions For Outer Panel Preparation				
Series	A Ref.	B Ref.	C Ref.	Anti-Rotation Stops
KM921 and KM1049	.880	.158	.250	Not Required
KM1040	1.300	.190	.350	Not Required
KM660	1.500	.093	.343	Required

Substructure Preparation

Hole Shape For Assembled Fastener

Hole Shape For Unassembled Fastener

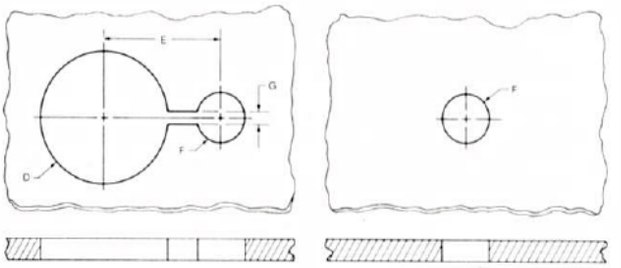

Select hole shape corresponding to installation method and form through hole(s) as shown. See important note above for relative position of outer panel and substructure holes.

Dimensions For Substructure Preparation				
Series	D Dia. Ref.	E Ref.	F Dia. Ref.	G Ref.
KM921 and KM1049	.500	.750	.250	.156
KM1040	Not* Applicable	Not* Applicable	.350	Not* Applicable
KM660	.937	.875	.343	.093

***Note:** KM1040 is sold unassembled only.*

Maximum Grip

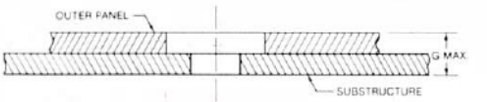

KM Series 1/4-turn fasteners will accommodate "G" maximum grip as tabulated below.

Part Number	"G" Max.
KM921 and KM1049	.250
KM1040	.260
KM660	.600

Installing Unassembled Fasteners/ KM921, KM1040, KM1049

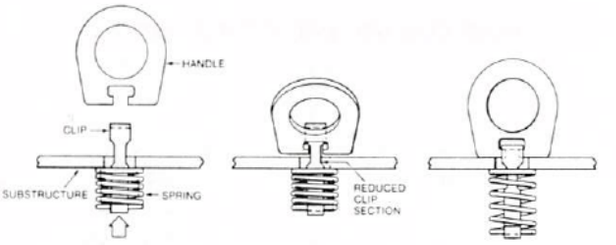

1. Slide spring over clip and insert assembly into substructure hole as shown above.

2. Slide handle over reduced clip section.

3. Release assembly. Fastener is now captivated to substructure. To remove, reverse assembly sequence.

Installing Unassembled Fastener/KM660

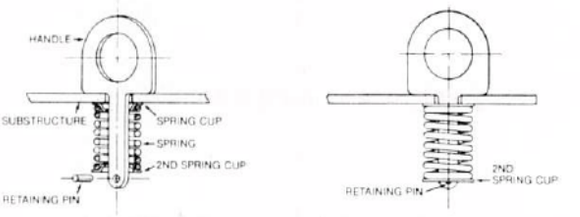

1. Insert handle through substructure hole as shown. Then slide spring cup, spring and second spring cup over handle. Install retaining pin and release assembly.

2. Second spring cup will cover and captivate retaining pin. Fastener is now captivated to substructure. To remove, reverse assembly sequence.

***Important Note:** Observe orientation of spring cups.*

See additional installation on following page.

Get quote

Angic Global Solutions 1-888-872-0690
https://www.AngicGlobal.com Sales@AngicGlobal.com

KM Series. Panel Preparation and Installation Data.

Installing Assembled Fasteners

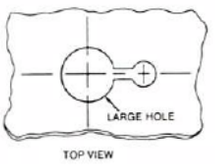

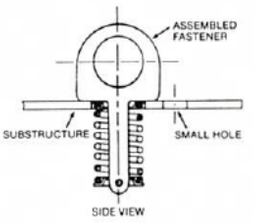

1. Locate large hole in substructure and insert fastener as shown in side view.

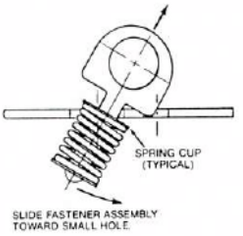

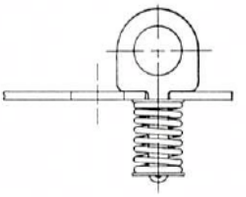

2. Slide fastener assembly over and center in small hole. Be sure spring and spring cup (if any) remain on back side of substructure.

Fastener Operation/KM660

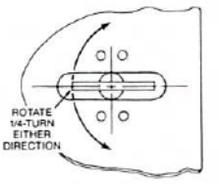

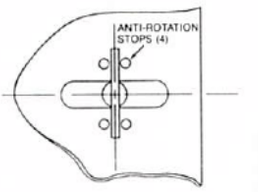

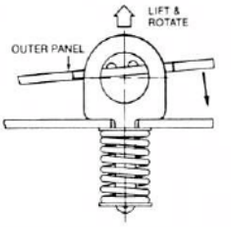

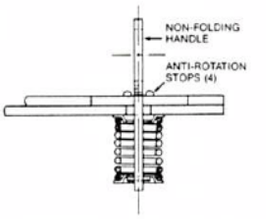

1. Close outer panel. Lift and rotate fastener 1/4-turn in either direction.

2. Center handle between anti-rotation stops. Outer panel is now securely locked in place.

Fastener Operation/KM921, KM1040, KM1049

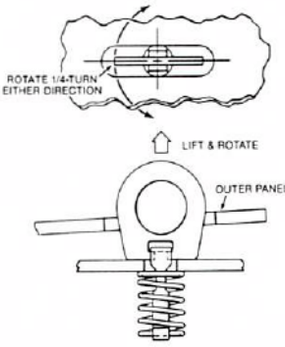

1. Close outer panel. Lift and rotate fastener 1/4-turn in either direction.

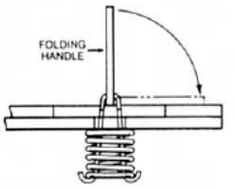

2. Fold down handle to lock in place.

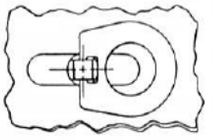

3. Outer panel is now securely locked in place.

NOTES

Get quote

Angic Global Solutions 1-888-872-0690
https://www.AngicGlobal.com Sales@AngicGlobal.com

STRUCTURAL PANEL FASTENERS SELECTOR GUIDE

High performance fasteners designed for aircraft and electronic applications. Used on stressed panels, they provide structurally supportive joints with high-cycle lives. Resistant to vibration and featuring multiple thread leads for quick operation. Broad range of sizes and styles.

See additional features and dimensional data on following pages.

Performance Specifications:

Stressed Panel Fastener	Strength (lbs.)		Load Bearing Length	Stud Grip Increments (inches)	MIL-Specs.
	Tensile	Shear			
 Series 4F	2210	4650	.180 to 1.080	.100	—
 Series 80F	2600	7000	.410 to 1.040	.070	Qualifies to MIL-F-22978* on QPL
 Series 17F	2500	2500	.177 to .511	.100	—
 Series 18F	2500	3000	.430 to .710	.070	—
 Series 9F	3840	6000 (Flush) 7000 (Plus Flush)	.167 to .487	.100	—
 Series 10F	3840	6000	.150 to .430	.070	—

*Meets the design, physical, and performance characteristics of testing

B

ANGIC
Get quote
Angic Global Solutions 1-888-872-0690
https://www.AngicGlobal.com Sales@AngicGlobal.com

STRUCTURAL PANEL FASTENERS SELECTOR GUIDE

Special Features (See dimensional data on Page B-22.)

4F

- Threaded parts in constant engagement, eliminating cross threading.
- High strength/weight ratio in tension and shear.
- Excellent vibration resistance.
- Positive clamping force.
- Releases in 1/4 turn — requires additional "backoff" prior to relocking.

80F

- Quad lead free-running threads.
- Locks and unlocks in approx. 1-1/2 turns.
- Positive and dependable torque device.
- Infinite locking positions.
- High strength/weight ratio in tension and shear.
- Qualifies to MIL-F-22978*, on QPL.
- Stud ejects and holds in retracted position.
- Sealed receptacle.

17F

- Quad lead threads for rapid operation.
- Self ejecting stud under residual shear.
- Same hole size in panel and frame (1/4 inch).
- Up to .030 panel misalignment correction.
- Interchangeable with other shear fasteners.
- Receptacle fused to fail when over-torqued.
- Infinite locking positions.
- Positive, dependable torque device.

Selector Guide

Stud Assemblies	Head Styles	Materials	Finish	Retaining Ring
4F 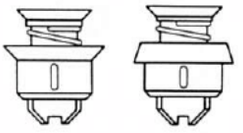 *Flush 4S14* *Plus Flush 4S15*	 Cross Recess	Alloy Steel per MIL-S-6049, 8740	Cadmium Plated	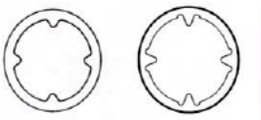 *For Flat Top Panel (Steel) 4S9 Type* *For Dimpled Top Panel (Steel) 4S10 Type*
80F 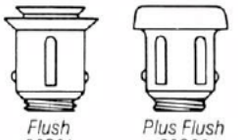 *Flush 80S01* *Plus Flush 80S06*	 Cross Recess	Alloy Steel per MIL-S-6049, 8740	Cadmium Plated	 *For Flat Top Panel (Steel) 4S9 Type* *For Dimpled Top Panel (Steel) 4S10 Type*
17F 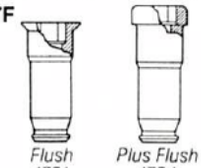 *Flush 17S1* *Plus Flush 17S4*	 Hex Recess	Alloy Steel per MIL-S-6049, 8740 CRES per AMS 5736 CRES per MIL-S-18732	Cadmium Plated Passivated	 *17S6 Type*
18F 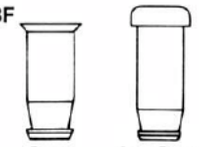 *Flush 18S01* *Plus Flush 18S03*	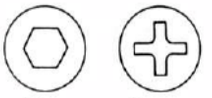 Hex Recess Cross Recess	Alloy Steel per MIL-S-6049, 8740	Cadmium Plated	 *17S11 Type*
9F 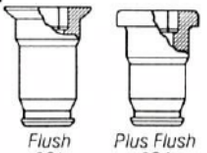 *Flush 9S1* *Plus Flush 9S4*	 Hex Recess	Alloy Steel per MIL-S-6049, 8740 CRES per AMS 5736 CRES per MIL-S-18732	Cadmium Plated Passivated	 *9S6 Type*
10F 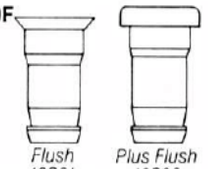 *Flush 10S01* *Plus Flush 10S03*	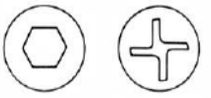 Hex Recess Recess per NAS1078	Alloy Steel per MIL-S-6049, 8740	Cadmium Plated	 *10S05 Type*

ANGIC Get quote

*Meets the desi istics of MIL-F-2 testing may not

Angic Global Solutions 1-888-872-0690
https://www.AngicGlobal.com Sales@AngicGlobal.com

18F

- Quad lead threads (2 turns to lock or unlock).
- Self ejecting stud under residual shear.
- Same hole size in panel and frame (1/4 inch).
- Receptacle fused to fail when over-torqued.
- Infinite locking positions.
- Stud end tapered for easy entry and engagement with receptacle.
- Interchangeable with other shear fasteners.
- Positive, dependable torque device.

9F

- Quad lead threads for rapid operation.
- Self ejecting stud under residual shear.
- Same hole size in panel and frame (3/8 inch).
- Receptacle fused to fail when over-torqued.
- Infinite locking positions.
- Up to .040 panel misalignment correction.
- Interchangeable with other shear fasteners.
- Positive, dependable torque device.

10F

- Quad lead threads (2 turns to lock or unlock).
- Infinite locking positions.
- Self ejecting stud under residual shear.
- Same hole size in panel and frame (3/8 inch).
- Interchangeable with other shear fasteners.
- Receptacle fused to fail when over-torqued.
- Stud end tapered for easy entry and engagement with receptacle.
- Positive, dependable torque device.

B

Receptacle	Materials	Finish
• **Floating .060 max.** 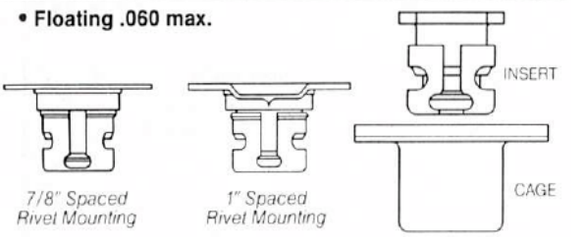 *7/8" Spaced Rivet Mounting* *1" Spaced Rivet Mounting* *Sealed Receptacle, 1" Spaced Rivet Mounting*	Alloy Steel (Internal Components CRES)	Cadmium Plated (Passivated)
• **Floating .040 max.** 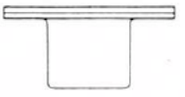 *7/8" Spaced Rivet Mounting*	Steel	Cadmium Plated
• **Floating .040 max.** 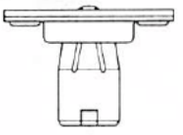 *11/16" Spaced Rivet Mounting*	CRES	Passivated
• **Floating .040 max.**  *11/16" Spaced Rivet Mounting*	Steel	Cadmium Plated
• **Floating .040 max.** 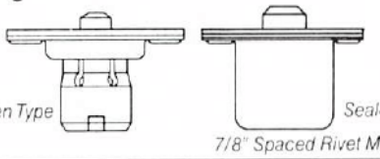 *Open Type* *Sealed Type* *7/8" Spaced Rivet Mounting*	Steel	Cadmium Plated
• **Floating .040 max.** 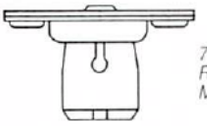 *7/8" Spaced Rivet Mounting*	Steel	Cadmium Plated (Sleeve and Screw Olive Drab)

Get quote

Angic Global Solutions 1-888-872-0690
https://www.AngicGlobal.com Sales@AngicGlobal.com

Typical SPF Dimensional Data

Note: These drawings represent the dimensions of only one typical fastener within each Structural Panel Fastener

For more detailed information, and a complete list of part numbers and sizes available, contact Camloc Products.

4F Series

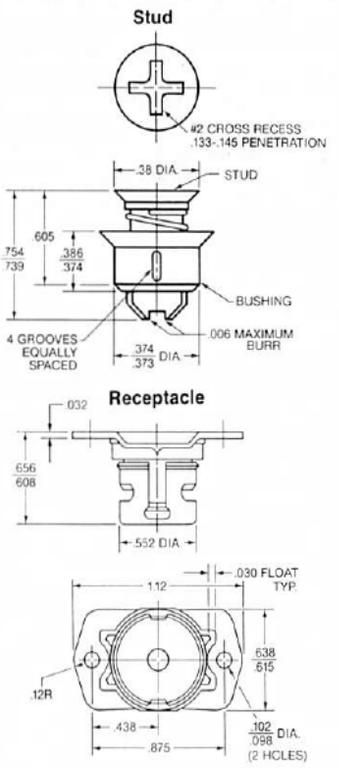

80F Series

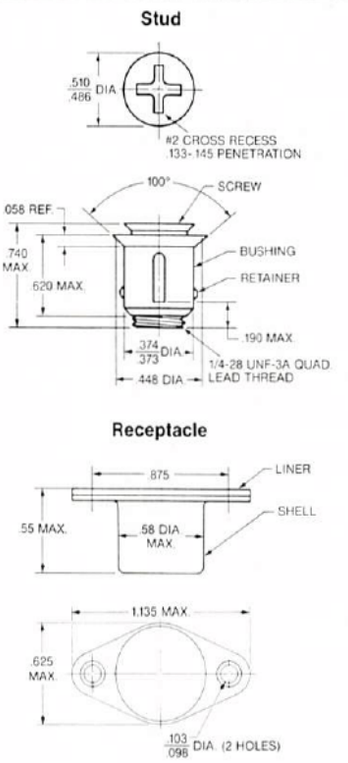

17F Series

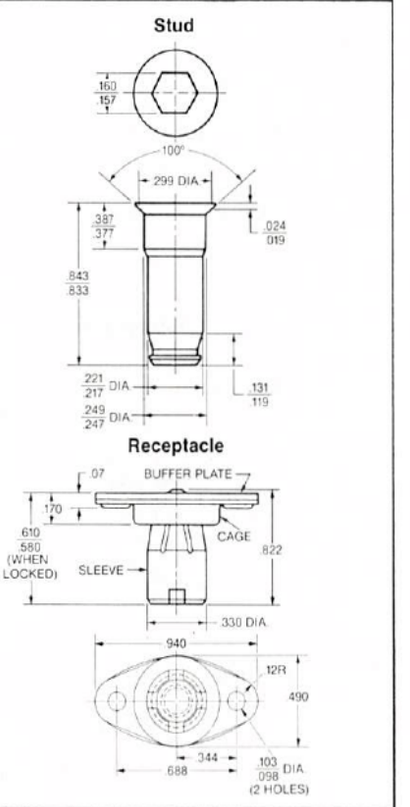

18F Series

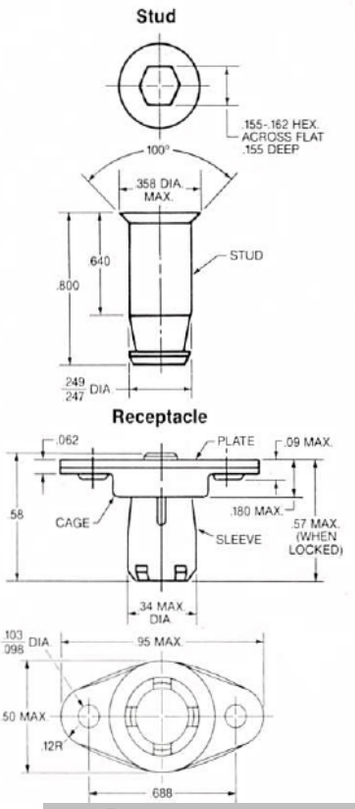

9F Series

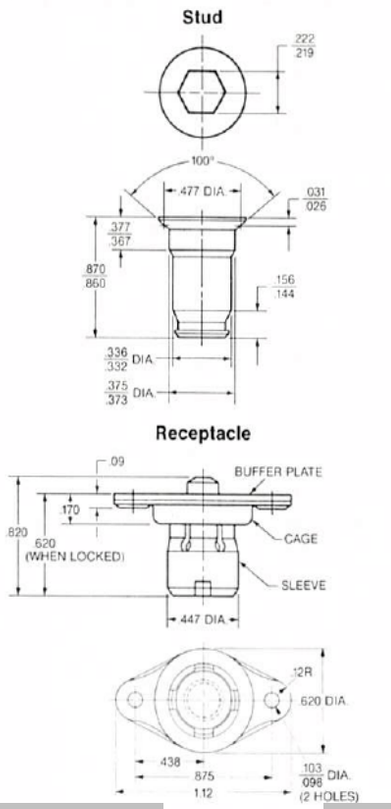

10F Series

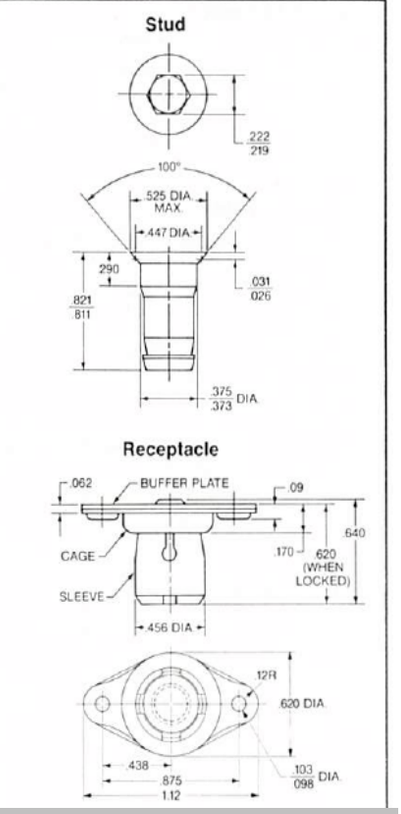

Get quote
Angic Global Solutions 1-888-872-0690
https://www.AngicGlobal.com Sales@AngicGlobal.com



- Completely assembled
- Low installation costs
- Snap into place with ordinary thumb pressure
- No special tools required for most Series
- Front or Rear mounting versions

Savings of up to 75% in installation costs alone can be achieved with the use of Camloc Snap-In Captive Screws.

No separate retaining rings or nuts to assemble. And no extensive panel preparation is needed. A simple drilled or punched hole is all that's necessary. Screws simply snap into place with ordinary thumb pressure.

With the large number of variations described in this catalog, you should find a snap-in captive screw that suits your special application. If not, call for design assistance.

Section Contents

	Page No.
21T Series, Front Mount Aluminum Housing	C-2 – C-3
22T Series, Front Mount Nylon or Aluminum Housing	C-4 – C-5
21T, 22T, 23T Series Installation Instructions	C-6
Design Problems and Solutions	C-7

C

SELECTOR GUIDE

Configuration and Basic Part Number	Head Styles	Size	Material		Finish	
			Housing	Screw	Housing	Screw
21T Series. Front Mount (Class 3 Thread) 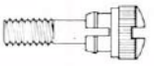	Pan Head with Phillips Recess 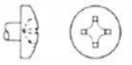 Fillister with Slot  Socket Head 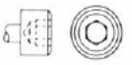	6-32 8-32 10-32 ¼-28	Aluminum	300 Series CRES	Chromate	Passivated per QQ-P-35
22T Series. Front Mount (Class 2 Thread) 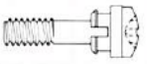	Pan Head with Slotted Recess  Pan Head with Phillips Recess 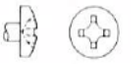	6-32 8-32 10-24 ¼-20	Nylon Aluminum	300 Series CRES	Black Chromate	Passivated per QQ-P-35

Note: Contact Camloc engineers for availability of other materials.

ANGIC Get quote
Angic Global Solutions 1-888-872-0690
https://www.AngicGlobal.com Sales@AngicGlobal.com

Front Snap-In Type

Stainless Steel Screw, Aluminum Housing



21T01 Series

Thread Size: 6-32 UNC-3A Thread per FED.STD.-H28

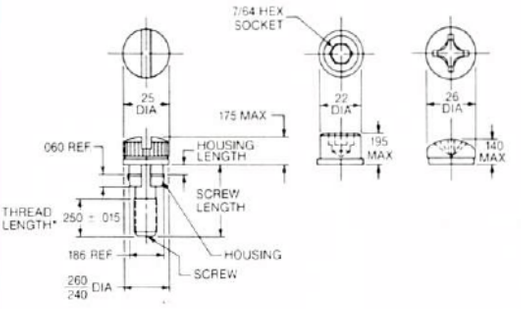

*P/N 21T01-1-06-[1, 2 OR 3]AA THREAD LENGTH = .200 ± .015

21T02 Series

Thread Size: 8-32 UNC-3A Thread per FED.STD.-H28

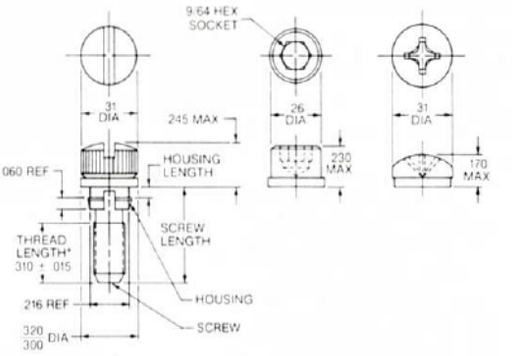

*P/N 21T02-3-08-[1, 2 OR 3]AA THREAD LENGTH = .250 ± .015

Head Style	Screw Length ± .02	Housing Length .049-.059 Part Number	Housing Length .076-.086 Part Number	Housing Length .106-.116 Part Number	Screw Length ± .02	Housing Length .049-.059 Part Number	Housing Length .076-.086 Part Number	Housing Length .106-.116 Part Number
Fillister Head style with linear knurl and slotted recess	.375	21T01-1-06-2AA	—	—	.500	21T02-1-08-2AA	21T02-2-08-2AA	21T02-3-08-2AA
	—	—	—	—	.562	21T02-1-09-2AA	21T02-2-09-2AA	21T02-3-09-2AA
	.500	21T01-1-08-2AA	21T01-2-08-2AA	21T01-3-08-2AA	.625	21T02-1-10-2AA	21T02-2-10-2AA	21T02-3-10-2AA
	.562	21T01-1-09-2AA	21T01-2-09-2AA	21T01-3-09-2AA	.688	21T02-1-11-2AA	21T02-2-11-2AA	21T02-3-11-2AA
	.625	21T01-1-10-2AA	21T01-2-10-2AA	21T01-3-10-2AA	.750	21T02-1-12-2AA	21T02-2-12-2AA	21T02-3-12-2AA
Socket Head style with hex socket recess	.375	21T01-1-06-3AA	—	—	.500	21T02-1-08-3AA	21T02-2-08-3AA	21T02-3-08-3AA
	—	—	—	—	.562	21T02-1-09-3AA	21T02-2-09-3AA	21T02-3-09-3AA
	.500	21T01-1-08-3AA	21T01-2-08-3AA	21T01-3-08-3AA	.625	21T02-1-10-3AA	21T02-2-10-3AA	21T02-3-10-3AA
	.562	21T01-1-09-3AA	21T01-2-09-3AA	21T01-3-09-3AA	.688	21T02-1-11-3AA	21T02-2-11-3AA	21T02-3-11-3AA
	.625	21T01-1-10-3AA	21T01-2-10-3AA	21T01-3-10-3AA	.750	21T02-1-12-3AA	21T02-2-12-3AA	21T02-3-12-3AA
Pan Head style with Phillips No. 2 recess	.375	21T01-1-06-1AA	—	—	.500	21T02-1-08-1AA	21T02-2-08-1AA	21T02-3-08-1AA
	—	—	—	—	.562	21T02-1-09-1AA	21T02-2-09-1AA	21T02-3-09-1AA
	.500	21T01-1-08-1AA	21T01-2-08-1AA	21T01-3-08-1AA	.625	21T02-1-10-1AA	21T02-2-10-1AA	21T02-3-10-1AA
	.562	21T01-1-09-1AA	21T01-2-09-1AA	21T01-3-09-1AA	.688	21T02-1-11-1AA	21T02-2-11-1AA	21T02-3-11-1AA
	.625	21T01-1-10-1AA	21T01-2-10-1AA	21T01-3-10-1AA	.750	21T02-1-12-1AA	21T02-2-12-1AA	21T02-3-12-1AA

Get quote

Angic Global Solutions 1-888-872-0690
https://www.AngicGlobal.com Sales@AngicGlobal.com

21T03 Series

Thread Size: 10-32 UNF-3A Thread per FED.STD.-H28

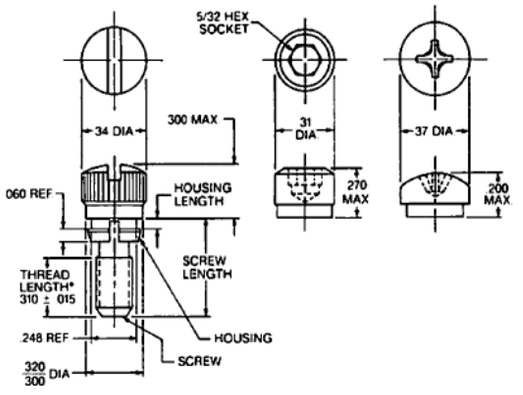

*P/N 21T03-3-08-[1, 2 OR 3]AA THREAD LENGTH = .250 ± .015

21T04 Series

Thread Size: ¼-28 UNF-3A Thread per FED.STD.-H28

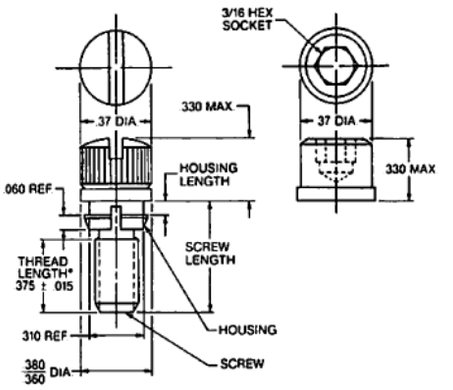

Screw Length ±.02	Housing Length .049-.059 Part Number	Housing Length .076-.086 Part Number	Housing Length .106-.116 Part Number
.500	21T03-1-08-2AA	21T03-2-08-2AA	21T03-3-08-2AA
.562	21T03-1-09-2AA	21T03-2-09-2AA	21T03-3-09-2AA
.625	21T03-1-10-2AA	21T03-2-10-2AA	21T03-3-10-2AA
.688	21T03-1-11-2AA	21T03-2-11-2AA	21T03-3-11-2AA
.750	21T03-1-12-2AA	21T03-2-12-2AA	21T03-3-12-2AA
.500	21T03-1-08-3AA	21T03-2-08-3AA	21T03-3-08-3AA
.562	21T03-1-09-3AA	21T03-2-09-3AA	21T03-3-09-3AA
.625	21T03-1-10-3AA	21T03-2-10-3AA	21T03-3-10-3AA
.688	21T03-1-11-3AA	21T03-2-11-3AA	21T03-3-11-3AA
.750	21T03-1-12-3AA	21T03-2-12-3AA	21T03-3-12-3AA
.500	21T03-1-08-1AA	21T03-2-08-1AA	21T03-3-08-1AA
.562	21T03-1-09-1AA	21T03-2-09-1AA	21T03-3-09-1AA
.625	21T03-1-10-1AA	21T03-2-10-1AA	21T03-3-10-1AA
.688	21T03-1-11-1AA	21T03-2-11-1AA	21T03-3-11-1AA
.750	21T03-1-12-1AA	21T03-2-12-1AA	21T03-3-12-1AA

Screw Length ±.02	Housing Length .060-.070 Part Number	Housing Length .090-.100 Part Number	Housing Length .120-.130 Part Number
.625	21T04-1-10-2AA	21T04-2-10-2AA	21T04-3-10-2AA
.688	21T04-1-11-2AA	21T04-2-11-2AA	21T04-3-11-2AA
.750	21T04-1-12-2AA	21T04-2-12-2AA	21T04-3-12-2AA
.625	21T04-1-10-3AA	21T04-2-10-3AA	21T04-3-10-3AA
.688	21T04-1-11-3AA	21T04-2-11-3AA	21T04-3-11-3AA
.750	21T04-1-12-3AA	21T04-2-12-3AA	21T04-3-12-3AA

Materials		Finish	
Screw	Housing	Screw	Housing
CRES	Aluminum	Passivate	Chromate

To Compute Weights

Formulas for Weight, in pounds per 100 pieces:

21T01 Series = .150 + (2nd DASH NO. x .02)
21T02 Series = .275 + (2nd DASH NO. x .02)
21T03 Series = .44 + (2nd DASH NO. x .04)
21T04 Series = .80 + (2nd DASH NO. x .07)

Example: Part Number 21T01-1-08-2AA
= .150 + (08 x .02)
= .31 lbs./100 pieces

C

Get quote
Angic Global Solutions 1-888-872-0690
https://www.AngicGlobal.com Sales@AngicGlobal.com

Front Snap-In Type

Stainless Steel Screw, Nylon or Aluminum Housing



NOTE: Metric sizes are available on request. Contact Camloc Products for availability.

22T01 Series, Nylon Housing
22T21 Series, Aluminum Housing

Thread Size: 6-32 UNC-2A Thread per FED.STD.-H28

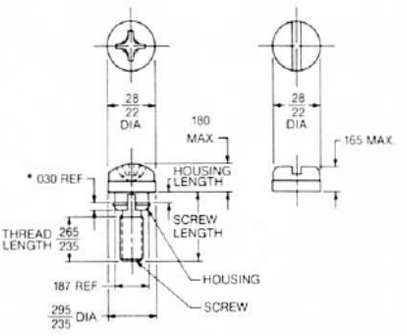

* = .060 Ref. for 22T21 Series

22T02 Series, Nylon Housing
22T22 Series, Aluminum Housing

Thread Size: 8-32 UNC-2A Thread per FED.STD.-H28

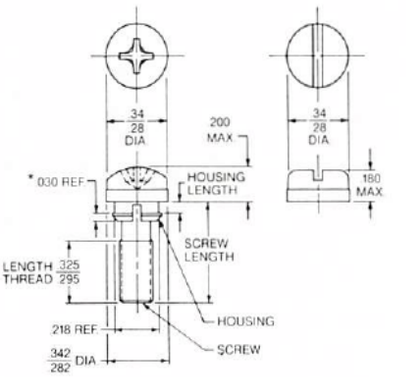

* = .060 Ref. for 22T22 Series

Nylon Housing	Screw Length ±.03	Housing Length .049-.064 Part Number	.076-.091 Part Number	.106-.121 Part Number	Screw Length ±.03	Housing Length .049-.064 Part Number	.076-.091 Part Number	.106-.121 Part Number
Pan Head style with Phillips recess	.375	22T01-1-06-1BB	22T01-2-06-1BB	22T01-3-06-1BB	.500	22T02-1-08-1BB	22T02-2-08-1BB	22T02-3-08-1BB
	.438	22T01-1-07-1BB	22T01-2-07-1BB	22T01-3-07-1BB				
	.500	22T01-1-08-1BB	22T01-2-08-1BB	22T01-3-08-1BB	.562	22T02-1-09-1BB	22T02-2-09-1BB	22T02-3-09-1BB
	.562	22T01-1-09-1BB	22T01-2-09-1BB	22T01-3-09-1BB				
	.625	22T01-1-10-1BB	22T01-2-10-1BB	22T01-3-10-1BB	.625	22T02-1-10-1BB	22T02-2-10-1BB	22T02-3-10-1BB
Pan Head style with slotted recess	.375	22T01-1-06-2BB	22T01-2-06-2BB	22T01-3-06-2BB	.500	22T02-1-08-2BB	22T02-2-08-2BB	22T02-3-08-2BB
	.438	22T01-1-07-2BB	22T01-2-07-2BB	22T01-3-07-2BB				
	.500	22T01-1-08-2BB	22T01-2-08-2BB	22T01-3-08-2BB	.562	22T02-1-09-2BB	22T02-2-09-2BB	22T02-3-09-2BB
	.562	22T01-1-09-2BB	22T01-2-09-2BB	22T01-3-09-2BB				
	.625	22T01-1-10-2BB	22T01-2-10-2BB	22T01-3-10-2BB	.625	22T02-1-10-2BB	22T02-2-10-2BB	22T02-3-10-2BB
Aluminum Housing	Screw Length ±.03	Housing Length .049-.064 Part Number	.076-.091 Part Number	.106-.121 Part Number	Screw Length ±.03	Housing Length .049-.064 Part Number	.076-.091 Part Number	.106-.121 Part Number
Pan Head style with Phillips recess	.375	22T21-1-06-1CC			.500	22T22-1-08-1CC	22T22-2-08-1CC	22T22-3-08-1CC
	.438	22T21-1-07-1CC						
	.500	22T21-1-08-1CC	22T21-2-08-1CC	22T21-3-08-1CC	.562	22T22-1-09-1CC	22T22-2-09-1CC	22T22-3-09-1CC
	.562	22T21-1-09-1CC	22T21-2-09-1CC	22T21-3-09-1CC				
	.625	22T21-1-10-1CC	22T21-2-10-1CC	22T21-3-10-1CC	.625	22T22-1-10-1CC	22T22-2-10-1CC	22T22-3-10-1CC
Pan Head style with slotted recess	.375	22T21-1-06-2CC			.500	22T22-1-08-2CC	22T22-2-08-2CC	22T22-3-08-2CC
	.438	22T21-1-07-2CC						
	.500	22T21-1-08-2CC	22T21-2-08-2CC	22T21-3-08-2CC	.562	22T22-1-09-2CC	22T22-2-09-2CC	22T22-3-09-2CC
	.562	22T21-1-09-2CC	22T21-2-09-2CC	22T21-3-09-2CC				
	.625	22T21-1-10-2CC	22T21-2-10-2CC	22T21-3-10-2CC	.625	22T22-1-10-2CC	22T22-2-10-2CC	22T22-3-10-2CC

Get quote
Angic Global Solutions 1-888-872-0690
https://www.AngicGlobal.com Sales@AngicGlobal.com

Materials		Finish	
Screw	Housing	Screw	Housing
CRES per QQ-S-763	Nylon	Passivate	Black
	Aluminum		Chromate

To Compute Weights

Formulas for Weight, in pounds per 100 pieces:

22T01 Series = .150 + (2nd DASH NO. x .02)
22T02 Series = .275 + (2nd DASH NO. x .02)
22T03 Series = .44 + (2nd DASH NO. x .04)
22T04 Series = .80 + (2nd DASH NO. x .07)

Example: Part Number 22T01-1-06-1AA = .150 + (06 x .02)
= .27 lbs./100 pieces

22T03 Series, Nylon Housing
22T23 Series, Aluminum Housing

Thread Size: 10-24 UNC-2A Thread per FED.STD.-H28

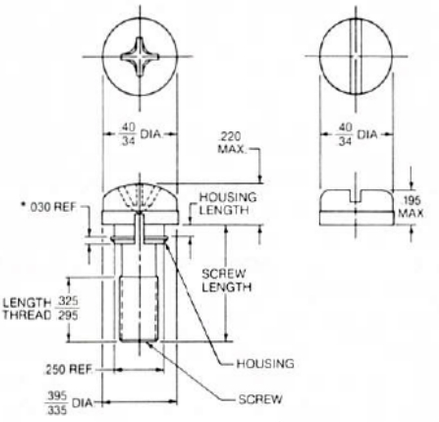

* = .060 Ref. for 22T23 Series

22T04 Series, Nylon Housing
22T24 Series, Aluminum Housing

Thread Size: ¼-20 UNC-2A Thread per FED.STD.-H28

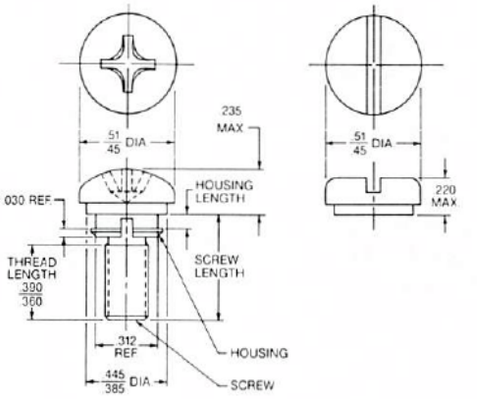

* = .060 Ref. for 22T24 Series

Screw Length ±.03	Housing Length .049-.064 Part Number	.076-.091 Part Number	.106-.121 Part Number	Screw Length ±.03	Housing Length .060-.075 Part Number	.090-.105 Part Number	.120-.135 Part Number
.500	22T03-1-08-1BB	22T03-2-08-1BB	22T03-3-08-1BB	.500	22T04-1-08-1BB	22T04-2-08-1BB	22T04-3-08-1BB
.562	22T03-1-09-1BB	22T03-2-09-1BB	22T03-3-09-1BB	.562	22T04-1-09-1BB	22T04-2-09-1BB	22T04-3-09-1BB
.625	22T03-1-10-1BB	22T03-2-10-1BB	22T03-3-10-1BB	.625	22T04-1-10-1BB	22T04-2-10-1BB	22T04-3-10-1BB
.500	22T03-1-08-2BB	22T03-2-08-2BB	22T03-3-08-2BB	.500	22T04-1-08-2BB	22T04-2-08-2BB	22T04-3-08-2BB
.562	22T03-1-09-2BB	22T03-2-09-2BB	22T03-3-09-2BB	.562	22T04-1-09-2BB	22T04-2-09-2BB	22T04-3-09-2BB
.625	22T03-1-10-2BB	22T03-2-10-2BB	22T03-3-10-2BB	.625	22T04-1-10-2BB	22T04-2-10-2BB	22T04-3-10-2BB

Screw Length ±.03	Housing Length .049-.064 Part Number	.076-.091 Part Number	.106-.121 Part Number	Screw Length ±.03	Housing Length .060-.075 Part Number	.090-.105 Part Number	.120-.135 Part Number
.500	22T23-1-08-1CC	22T23-2-08-1CC	22T23-3-08-1CC	.500	22T24-1-08-1CC	22T24-2-08-1CC	22T24-3-08-1CC
.562	22T23-1-09-1CC	22T23-2-09-1CC	22T23-3-09-1CC	.562	22T24-1-09-1CC	22T24-2-09-1CC	22T24-3-09-1CC
.625	22T23-1-10-1CC	22T23-2-10-1CC	22T23-3-10-1CC	.625	22T24-1-10-1CC	22T24-2-10-1CC	22T24-3-10-1CC
.500	22T23-1-08-2CC	22T23-2-08-2CC	22T23-3-08-2CC	.500	22T24-1-08-2CC	22T24-2-08-2CC	22T24-3-08-2CC
.562	22T23-1-09-2CC	22T23-2-09-2CC	22T23-3-09-2CC	.562	22T24-1-09-2CC	22T24-2-09-2CC	22T24-3-09-2CC
.625	22T23-1-10-2CC	22T23-2-10-2CC	22T23-3-10-2CC	.625	22T24-1-10-2CC	22T24-2-10-2CC	22T24-3-10-2CC

C

Get quote
Angic Global Solutions 1-888-872-0690
https://www.AngicGlobal.com Sales@AngicGlobal.com

21T, 22T, 23T Series. Panel Preparation and Installation Data.

Installation Instructions:

1. Drill or punch mounting hole in panel to "A" diameter, as indicated in Table I for your particular part number. See Figure 1.
2. Counterbore rear of panel, if necessary, to "B" diameter, as indicated in Table I. See Figure 2.
3. Insert captive screw into front, or top, of prepared mounting hole and push with thumb. See Figure 3.
4. Collar will snap into place, captivating entire housing, when fully installed. See Figure 4.

Note: 23T Series referenced on this page are metric versions not shown. Contact Camloc Products Division for details on this series.

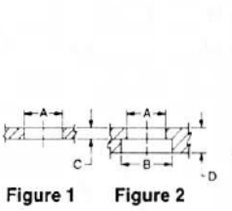

Figure 1 Figure 2

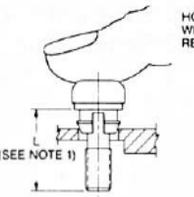

Figure 3

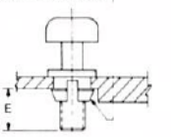

Figure 4

Notes:

1. "L" = 2nd DASH NO. x .0625.
2. See basic drawings for additional dimensional information.

Sample Part Number: (See shaded area of Table II)

21T01-3-06-1-AA

- FINISH SUFFIX
- 3rd DASH NO. (HEAD STYLE)
- 2nd DASH NO. (SCREW LENGTH)
- 1st DASH NO. (HOUSING LENGTH)
- BASIC PART NUMBER

Table I

Basic Part Number	"A" Diameter	"B" Counterbore Diameter
21T 22T 01 23T	.193 / .188	.250
21T 22T 02 23T	.224 / .216	.281
21T 22T 03 23T	.256 / .248	.312
21T 22T 04 23T	.318 / .310	.375

Table II

Basic Part Number		1st Dash Number	"C" Maximum	"D" Minimum	"E" Reference
21T		-1	.048	.113	.200
22T	01	-2	.075	.140	.175
23T		-3	.105	.170	.145
21T		-1	.048	.113	.260
22T	02, 03	-2	.075	.140	.235
23T		-3	.105	.170	.205
21T		-1	.060	.125	.310
22T	04	-2	.090	.155	.280
23T		-3	.120	.185	.250

Get quote

Angic Global Solutions 1-888-872-0690
https://www.AngicGlobal.com Sales@AngicGlobal.com

Design Problems and Solutions

Although is it impossible to anticipate all design problems, certain dilemmas appear repeatedly. The purpose of this section is to illustrate successful approaches used to resolve these "standard problems."

The terms "total float," "top panel" and "bottom panel" will be used frequently. "Total float" means the minimum difference in diameter between the captive screw shank and the circle inscribed by the shank surface as it rotates through 360° in the extreme off-center position. This is illustrated by Figure 1. "Top panel" indicates that part of the assembly to which the screw is captivated. "Bottom panel" means that part of the assembly distinct from the top panel to which the captive screw is joined in the fully installed condition.

Figure 1

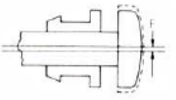

"F" dimension equals total float

Selecting Correct Screw Lengths.

Determine the distance from the topside of the top panel to the first mating thread of the bottom panel. This is to be accomplished in the fully installed condition. If gasket material is used, all calculations must be done using the thickness of the gasket when compressed. Add to this the required length of thread engagement.

Care should be taken to avoid the possibility of specifying a screw length/thread length combination which could allow the screw shank to jam in the bottom panel threads as shown in Figure 2.

Figure 2

Screw shank jammed in bottom panel thread before clamp up was achieved.

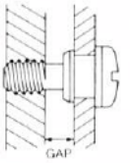

Selection of Correct Housing.

Selection of the correct housing is accomplished by specifying the part number which corresponds to top panel thickness as tabulated under the columns headed "Housing Length."

If top panel thickness extends beyond the range of tabulated values, standard components may be utilized by adding spacers in the case of thin panels (Figure 3), or counterboring in the case of thick panels (Figure 4). Use of spacers may cause some degradation of ultimate shear.

Figure 3

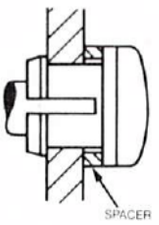

Figure 4

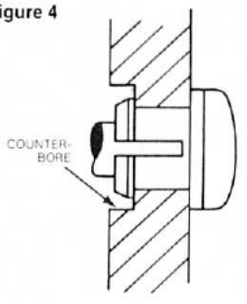

Jack-Out Damage.

Destructive jack-out forces may be encountered when removing a panel which uses a number of captive screws. This occurs when a screw reaches the limit of retraction permitted by its housing before its threads are fully disengaged from the mating threads of the bottom panel (Figures 5 and 6).

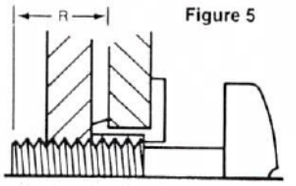

Figure 5

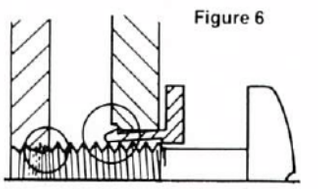

Figure 6

Typical jack-out condition. Screw has reached full retraction. Continued application of torque will result in damage. "R" equals screw protrusion at full retraction.

Cycle Life Problems.

Captive screws are usually subjected to numerous installation and removal cycles, often using a speed wrench. Both cause unusual demands on the wrenching recess. Slotted and Phillips recesses are especially vulnerable to cam-out through slippage or the use of an inappropriate tool as opposed to the correct bit. For these reasons, a hex socket recess is recommended wherever possible. Provided the proper depth and diameter socket is specified relative to the thread size, the hex recess gives superior trouble-free service.

Misalignment.

Potential for misalignment of the top and bottom panel is aggravated when the design dictates use of a number of screws in a given panel. The problem may be minimized through careful use of manufacturing techniques such as clamping the top and bottom panels together and drilling all holes in one continuous operation. Such methods, however, are not always logistically and/or economically possible. In addition, when gasket material is used, misalignment becomes a significant factor regardless of manufacturing method.

Float may also be introduced to the top panel in certain instances through the use of oversize holes and washers (Figure 7).

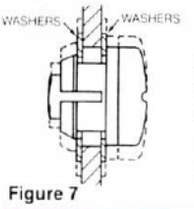

Figure 7

Note: Use of float may cause some degradation of ultimate shear. When oversize holes are used to provide float, any counterbore to accommodate a retaining ring must be increased by a like amount and remain concentric.

Vibration Induced Problems.

Captive screws can become loosened and/or disengaged in high vibration environments. Use of a self-locking thread in mating parts is recommended.

Get quote
Angic Global Solutions 1-888-872-0690
https://www.AngicGlobal.com Sales@AngicGlobal.com

NOTES

Get quote

Angic Global Solutions 1-888-872-0690
https://www.AngicGlobal.com Sales@AngicGlobal.com

BLIND NUTS

HIGH-STRENGTH RivIT® INSERTS

Provide high strength permanent threads for blind applications in sheet metal, tubing or plastics

- Many versions readily available from stock.
- Low cost assembly.
- High torque-out resistance without special installation preparation.

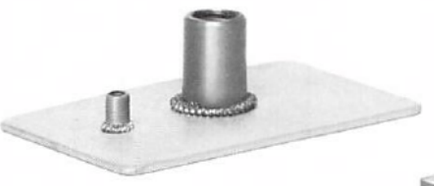

Knurled barrel grips hole edge firmly with minimum protrusion on external material surfaces.

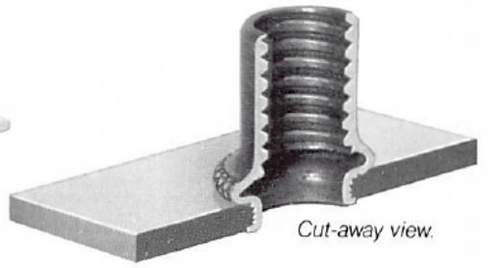

Cut-away view.

Features:

- Easy, blind installation in single diameter holes with standard, readily available tooling.
- No need for keyway or close tolerance hole preparation.
- Knurled barrel assures high rotational resistance.
- Flush head type with either through or blind end threads.
- Internal thread lock, blind end and special configurations are available.
- Variety of cost effective hand and power installation tools available.

Materials:

303 CRES Stainless Steel per AMS 5640 or equal.

Finish:

Passivated per QQ-P-35.

Self-Locking Feature: (303 CRES material only).

Self-locking versions are available.

Optional dry film lubricant per MIL-L-46010 can be supplied and is recommended for locking parts. The lock location for the thru-thread type is in the last two threads. See next page, "F" dimension for lock location on blind-end type.

Grip Selection

For proper sizing, determine the grip range (material thickness plus burrs, paint and required air gaps). Select the correct Camloc Blind Nut from the Grip Tables. For best results, select the next longer size if the material is soft and the grip approaches the maximum. If you plan to countersink the head, the countersink must be machined so that the Camloc Blind Nut head is slightly above the material surface before setting.

Note: *See page D-5 for panel preparation.*

RivIT Performance Data

Nominal Thread Size	Ultimate [1] Tensile Load Lbs. Min.	Ultimate [2] Torque-Out In.-Lbs.
4 - 40	720	7
6 - 32	1100	15
8 - 32	1700	23
10 - 24	2100	27
10 - 32	2400	27
1/4 - 20	3800	45
1/4 - 28	4350	45
5/16 - 18	6300	90
5/16 - 24	6950	90
3/8 - 16	9300	120
3/8 - 24	10500	120

[1] Tensile strength values for 303 CRES are based on developing the tensile strength of a 120,000 psi bolt; carbon steel values are based on developing the tensile strength of a 60,000 psi bolt. Parent material shear strength should be equal or higher to develop loads tabulated.

[2] Torque-out values are average for actual tests in 7075-T6 aluminum with no axial load on the RivIT inserts. The torque-out values are shown for reference and design purposes only. Variations must be expected in actual use.

ANGIC GLOBAL SOLUTIONS
Get quote
Angic Global Solutions 1-888-872-0690
https://www.AngicGlobal.com Sales@AngicGlobal.com

BLIND NUTS

Flush Head Style

Thru-Thread Type

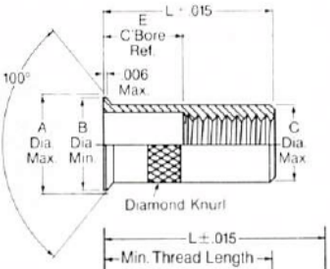

Blind End Thread Type

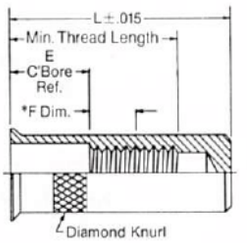

*F Dim. indicates the beginning of thread lock.

How to Order:

H111F 3 C B 6 3 –080 M

- M — Dry film lube (optional). Recommended for 303 CRES Self-Locking parts
- –080 — Grip Range Code
- 3 — Thread Style Code: 3 = Non-locking thread; 5 = Self-locking thread*
- 6 — Material Code: 6 = 303 CRES
- B — Add for Blind End Thread Type (optional)
- C — Coarse Thread Pitch (available where tabulated in Thread Size Code)
- 3 — Thread Size Code
- H111F — Basic Part Number: F = Flush Head

Thread Size	Thread Size Code	Grip Range	Grip Range Code
(4–40) .112–40 UNJC–3B	0C	.030–.070	–070
		.070–.110	–110
		.110–.150	–150
		.150–.190	–190
		.190–.230	–230
(6–32) .138–32 UNJC–3B	1C	.030–.070	–070
		.070–.110	–110
		.110–.150	–150
		.150–.190	–190
		.190–.230	–230
(8–32) .164–32 UNJC–3B	2C	.030–.070	–070
		.070–.110	–110
		.110–.150	–150
		.150–.190	–190
		.190–.230	–230
(10–24) .190–24 UNJC–3B	3C	.030–.080	–080
		.080–.130	–130
		.130–.180	–180
		.180–.230	–230
		.230–.280	–280
(10–32) .190–32 UNJF–3B	3	.030–.080	–080
		.080–.130	–130
		.130–.180	–180
		.180–.230	–230
		.230–.280	–280
(1/4–20) .250–20 UNJC–3B	4C	.030–.080	–080
		.080–.140	–140
		.140–.200	–200
		.200–.260	–260
		.260–.320	–320
(1/4–28) .250–28 UNJF–3B	4	.030–.080	–080
		.080–.140	–140
		.140–.200	–200
		.200–.260	–260
		.260–.320	–320
(5/16–18) .3125–18 UNJC–3B	5C	.060–.080	–080
		.080–.140	–140
		.140–.200	–200
		.200–.260	–260
		.260–.320	–320
(5/16–24) .3125–24 UNJF–3B	5	.060–.080	–080
		.080–.140	–140
		.140–.200	–200
		.200–.260	–260
		.260–.320	–320
(3/8–16) .375–16 UNJC–3B	6C	.060–.080	–080
		.080–.140	–140
		.140–.200	–200
		.200–.260	–260
		.260–.320	–320
(3/8–24) .375–24 UNJF–3B	6	.060–.080	–080
		.080–.140	–140
		.140–.200	–200
		.200–.260	–260
		.260–.320	–320

Get quote

Angic Global Solutions 1-888-872-0690
https://www.AngicGlobal.com Sales@AngicGlobal.com

Common Dimensions					Thru Type	Blind End Type	
A Dia. Max.	B Dia. Min.	C Dia. Max.	E Dim.	F Dim. +.030 −.000	L Dim.	Min. Thread Length	L Dim.
.219	.205	.186	.17	.112	.330	.395	.530
			.21		.370	.435	.570
			.25		.410	.475	.610
			.29		.450	.515	.650
			.33		.490	.555	.690
.219	.205	.186	.17	.138	.370	.440	.615
			.21		.410	.480	.655
			.25		.450	.520	.695
			.29		.490	.560	.735
			.33		.530	.600	.775
.254	.240	.217	.18	.164	.420	.485	.650
			.22		.460	.525	.690
			.26		.500	.565	.730
			.30		.540	.605	.770
			.34		.580	.645	.810
.294	.280	.255	.21	.190	.490	.587	.760
			.26		.540	.637	.810
			.31		.590	.687	.860
			.36		.640	.737	.910
			.41		.690	.787	.960
.294	.280	.255	.21	.190	.490	.541	.715
			.26		.540	.591	.765
			.31		.590	.641	.815
			.36		.640	.691	.865
			.41		.690	.741	.915
.359	.345	.326	.23	.250	.600	.705	.900
			.29		.660	.765	.960
			.35		.720	.825	1.020
			.41		.780	.865	1.080
			.47		.840	.945	1.140
.359	.345	.326	.23	.250	.600	.641	.830
			.29		.660	.701	.890
			.35		.720	.761	.950
			.41		.780	.821	1.010
			.47		.840	.881	1.070
.431	.417	.395	.25	.312	.715	.812	1.050
			.31		.775	.872	1.110
			.37		.835	.932	1.170
			.43		.895	.992	1.230
			.49		.955	1.052	1.290
.431	.417	.395	.25	.312	.715	.750	.955
			.31		.775	.810	1.015
			.37		.835	.870	1.075
			.43		.895	.930	1.135
			.49		.955	.990	1.195
.504	.490	.467	.27	.375	.830	.926	1.195
			.33		.890	.986	1.255
			.39		.950	1.046	1.315
			.45		1.010	1.106	1.375
			.51		1.070	1.166	1.435
.504	.490	.467	.27	.375	.830	.832	1.055
			.33		.890	.892	1.115
			.39		.950	.952	1.175
			.45		1.010	1.012	1.235
			.51		1.070	1.072	1.295

All dimensions in inches.

D

Get quote

Angic Global Solutions 1-888-872-0690
https://www.AngicGlobal.com Sales@AngicGlobal.com

BLIND NUTS

PANEL PREPARATION FOR HIGH STRENGTH RivIT® INSERTS

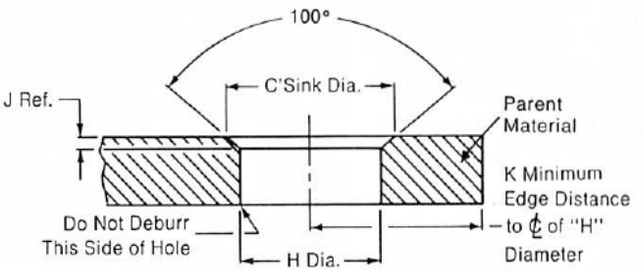

Installed Insert

Flushness to be within .005 above and .009 below parent material. (If flushness desired to be within .000 above and .009 below parent material, hold C'Sink diameter tolerance to ±.005.)

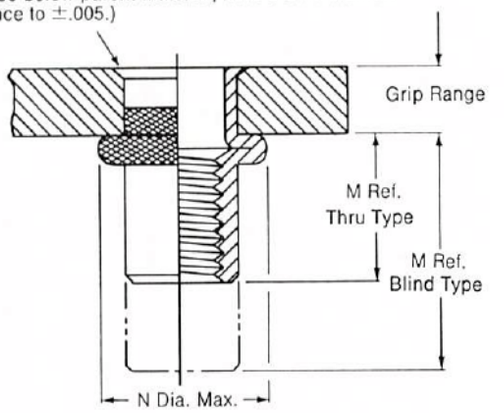

Thread Size Code	Nominal Insert Thread Size	H Dia.	K Min.	M		N Dia. Max.	+.005 −.010 C'Sink Dia.	J Ref.
				Thru-Type Ref.	Blind Type Ref.			
0C	4–40	.187 .190	.138	.189	.389	.270	.224	.014
1C	6–32			.229	.474			
2C	8–32	.218 .221	.164	.278	.508	.300	.259	.016
3C	10–24	.256 .261	.190	.328	.598	.370	.299	
3	10–32				.553			
4C	¼–20	.327 .332	.250	.424	.724	.480	.364	.014
4	¼–28				.654			
5C	5/16–18	.396 .401	.312	.526	.861	.610	.436	.015
5	5/16–24				.766			
6C	⅜–16	.468 .473	.375	.632	.997	.700	.509	.015
6	⅜–24				.857			

Get quote

Angic Global Solutions 1-888-872-0690
https://www.AngicGlobal.com Sales@AngicGlobal.com

INSTALLATION TOOLS

H111HG-4-[ ] Hand Gun for limited production runs or field repair of blind nuts.



The H111HG-4 Insert hand gun is an extremely powerful, versatile and lightweight tool capable of installing Insert sizes up to ¼". Many years of trouble free operation can be expected from this tool, however, you should become familiar with a few simple operating procedures to ensure maximum performance and minimum wear.

H111HG-4 Series Hand Gun Part No. Selection

Thread Size Code	Nominal Insert Thread Size	Hand Gun Set Part No.	Components Included		
			Anvil Part No.	Pull-Up Mandrel Part No.	Plastic Case/ Hand Gun Part No.
0C	4–40	H111HG-4-0C	H111AH-1	H111MH-0C	H111HG-4
1C	6–32	H111HG-4-1C	H111AH-1	H111MH-1C	
2C	8–32	H111HG-4-2C	H111AH-2	H111MH-2C	
3C	10–24	H111HG-4-3C	H111AH-3	H111MH-3C	
3	10–32	H111HG-4-3	H111AH-3	H111MH-3	
4C	¼–20	H111HG-4-4C	H111AH-4	H111MH-4C	
4	¼–28	H111HG-4-4	H111AH-4	H111MH-4	

Notes: 1. To order complete assembly, select Hand Gun Set Part No. for corresponding nominal thread size.
2. Hand Gun Set includes: Anvil and Mandrel for nominal thread size desired, Plastic Case, and Gun.
3. Individual components may be ordered separately.
4. Use H111-PG6 Power Gun to install insert sizes of 5/16–18 and greater.

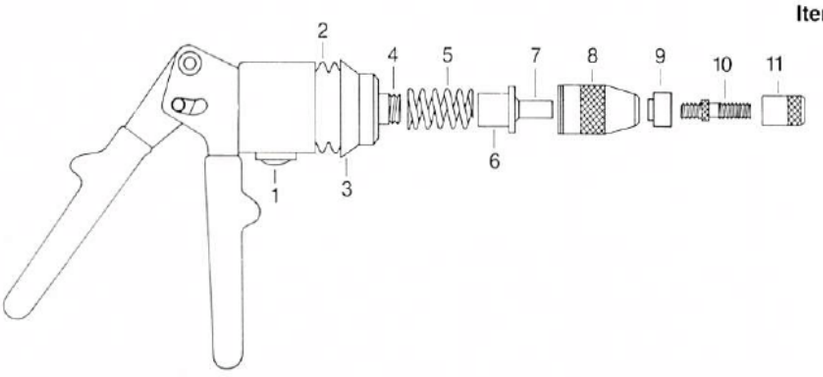

Item Number	Description
1	Button
2	Reservoir
3	Protective Shield
4	Puller Shaft
5	Spring
6	Master Shaft Holder
7	Master Shaft
8	Outer Sleeve
9	Turning Nut
10	Pull-Up Mandrel
11	Anvil

D

Operating Instructions for the H111HG-4 Hand Gun

Principle of Operation:

The H111HG-4 utilizes a patented cylindrical hydraulic pump assembly which is actuated by the movement ("pumping") of the handle assembly. The pull-up mandrel remains stationary while the outer sleeve of the tool moves forward until sufficient load is developed to upset the fastener. A load of 2500 lbs. can be achieved in just a few pumps, however, the maximum stroke of ⅛" will require approximately 11 pumps.

Operation: (Refer to Figure 1)

1. Push in on the button (Item #1) and draw the handles together. If there is any extension of the outer sleeve (Item #8), this will cause it to fully retract to its starting position. Now, release the button.
2. Thread the left handed thread pull-up mandrel (Item #10) onto the master shaft (item #7) and push the required anvil (Item #11) in place making sure that it bottoms out against the turning nut.
3. Thread the appropriate Insert onto the mandrel and install. Depending upon the size and grip range of the Insert, the number of pumps will vary, however, 6 to 8 full pumps will generally suffice.
4. To remove the pull-up mandrel from the fastener, push the button and draw the handles together as in Step 1. Turn the outer sleeve counterclockwise until the mandrel is disengaged.

CAUTION

The mechanical advantage of the H111HG-4 tool is such that it is possible to reach loads of up to 2500 lbs. in just a few pumps. Over pumping can result in stripping the Insert threads, or in some cases the pull-up mandrel will break from excessive load.

It is recommended that several fasteners be installed in a representtive test plate in order to determine the "feel" and the number of pumps required to properly install the Insert.

ANGIC
Get quote
Angic Global Solutions 1-888-872-0690
https://www.AngicGlobal.com Sales@AngicGlobal.com

INSTALLATION TOOLS

H111-[ ] PG-6 Power Gun Assembly

Power Gun for fast blind nut installation and high production runs:**



Camloc Power Gun installs all size Inserts. Simply connect power unit to 50–125 PSI air supply, adjust pressure and it's ready to use.

Nose Assembly Components

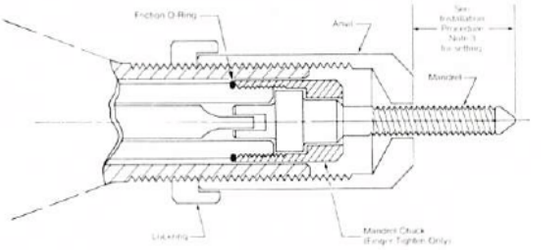

Power Unit

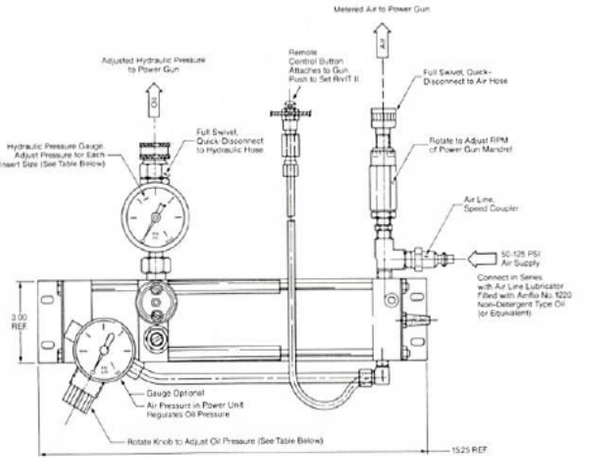

Plumbing arrangement manufacturer's option.

To order complete assembly, select correct Power Gun Assembly Part Number for corresponding nominal Insert thread size. (See table below.) Components may be ordered separately. Hoses are supplied with Power Gun.

Thread Size Code	Nominal Insert Thread Size	Power Gun Assembly Part No.	Power Gun Only Part No.	Components Included					Approx. Installation Hydraulic Pressure Gauge Setting (PSI)*	
				Power Unit Part No.	Pull-up Mandrel Part No.	Mandrel Chuck Part No.	Anvil Part No.	Anvil Lock Ring Part No.	Steel	CRES
0C	4–20	H111-0CPG-6	H111-PG-6	H111-PP-6	H111-0CMP-5	H111-203	H111-0AP-5	H111-LR-5	600	700
1C	6–32	H111-1CPG-6			H111-1CMP-5		H111-1AP-5			
2C	8–32	H111-2CPG-6			H111-2CMP-5		H111-2AP-5		1000	1200
3C	10–24	H111-3CPG-6			H111-3CMP-5		H111-3AP-5		1400	1950
3	10–32	H111-3PG-6			H111-3MP-5					
4C	¼–20	H111-4CPG-6			H111-4CMP-5		H111-4AP-5		2000	2450
4	¼–28	H111-4PG-6			H111-4MP-5					
5C	5/16–18	H111-5CPG-6			H111-5CMP-5		H111-5AP-5		2600	3000
5	5/16–24	H111-5PG-6			H111-5MP-5					
6C	⅜–16	H111-6CPG-6			H111-6CMP-5		H111-6AP-5		3200	4000
6	⅜–24	H111-6PG-6			H111-6MP-5					

*Pressures shown do not compensate for different grips and must be verified or adjusted through trial installations in actual panels. Caution: Use only minimum hydraulic pressures that will properly bulb inserts. Additional pressures could result in thread stripping of smaller sized and self-locking inserts.

**Safety Precaution: H111-PG-6 Power Gun to be used with H111-PP-6 Power Unit only.

Get quote

Angic Global Solutions 1-888-872-0690
https://www.AngicGlobal.com Sales@AngicGlobal.com

Wedg-Tite® PCB Retainers

Features & Benefits

- Available with unique torque limiter to provide prescribed board load.
- Spring element to prevent wedge segments from rotating in unlocked position.
- Various insertion/extraction devices available to facilitate removing and replacing PCBs with large numbers of pin connections.
- Choice of actuators: hex key or slot head.
- Three and five wedge versions.
- Clamping load: for three section type: 90 pounds; five section type: 125 pounds.
- Stop nut prevents accidental disassembly of wedge.
- Designed for minimal weight gain and multiple channel widths.
- Available rear ratchet assembly prevents over-loosening of wedge segments (patent pending).

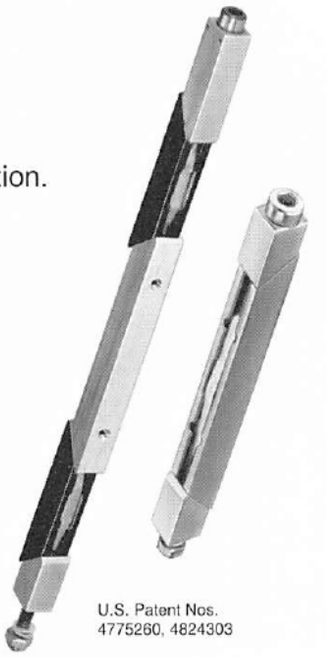

U.S. Patent Nos.
4775260, 4824303

How it Operates:

As outer wedge segments draw together through screw actuation, the center wedge moves laterally to fill the gap between the PC board and cold plate/card cage.

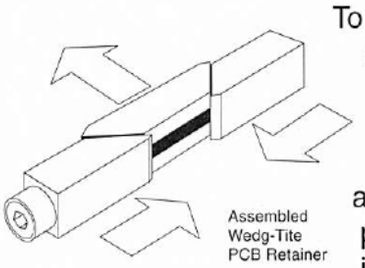

Assembled
Wedg-Tite
PCB Retainer

To fasten the PCB in the frame, the board and the wedge assembly are inserted between the two channel walls and the actuator screw is turned clockwise. This forces the two outer wedges toward each other and simultaneously against the PCB and frame wall or cold plate. As a result, a heat transfer path is made between the PCB and cold plate, assuring adequate heat dissipation. The wedge also acts as a stiffener for the PCB substrate; as a result, rigidity is increased.

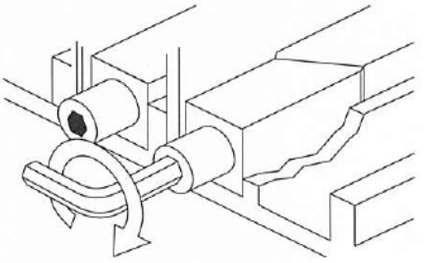

Torque Limiter

The Wedg-Tite PCB retainer is the only card retainer with a built-in torque limiter. No expensive torque wrenches are required. Whether actuated by a key or a lever, you'll hear and feel the "click-click" as the PCB Wedg-Tite fastener signals that your boards are properly locked in place. Once set, you can relax. The Wedg-Tite assures the holding force will be above the critical minimum. Initial installation and field replacements can be made in a matter of seconds with no need for special tools.

Not every PCB installation requires critical control over the holding force exerted on the card cage cold plates. For these applications Wedg-Tite retainers are available without the torque limiter. However, when a specific force is required, you can rely on the PCB Wedg-Tite to take the worry out of heat transfer and vibration problems.

ANGIC GLOBAL SOLUTIONS
Get quote
Angic Global Solutions 1-888-872-0690
https://www.AngicGlobal.com Sales@AngicGlobal.com

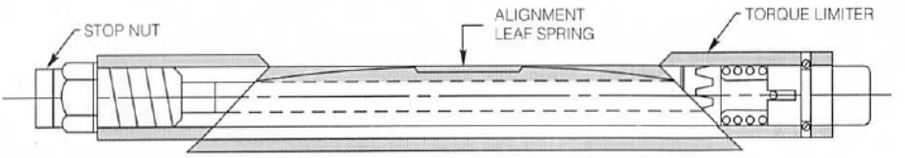

Captivation

A stop nut prevents accidental disassembly of the wedges when they are in the relaxed position. Coupled with the anti-friction washers, the stop nut complements the alignment springs keeping the wedge segments together for easy assembly.

Double Ratchet

Wedges incorporating the double ratchet feature consist of a front torque limiter and rear ratchet assembly. Upon loosening, an audible "click-click" will be heard indicating the actuator is free turning when the relaxed position is reached. This prevents excessive loosening of the rear wedge.

Selection Guide

Recommendations

- Use Torque Limiter versions when...
  - Wedg-Tite is to be used in high vibration environment.
  - Wedg-Tite will be serviced in the field with limited tools.
- Specify Screw Mount versions when...
  - You need a preassembled wedge for ease of re-use on board swap-out.
- Use 5-piece Wedg-Tite when...
  - Load distribution is critical.
  - Retainer is longer than 6 inches.

E

Materials

All Wedg-Tite retainers are fabricated of the following materials:

Wedge Segments: Aluminum Alloy, 6061-T6 per QQ-A-200/8

Driver Assembly: CRES, 400 Series per ASTM A580

Leaf Spring: CRES, 300 Series per ASTM A666

Finishes

All Wedg-Tite retainers are available in one of the following finishes:

Chemical Conversion Coating: Per MIL-C-5541, Class 3

Black Anodize: Per MIL-A-8625, Type II, Class 2

Hard Black Anodize: Per MIL-A-8625, Type III, Class 2

ANGIC GLOBAL SOLUTIONS
Get quote
Angic Global Solutions 1-888-872-0690
https://www.AngicGlobal.com Sales@AngicGlobal.com

53S Series. Torque Limiter, Ratchet Versions

Style	Dimensions	Ratchet	Head Style	Mount	A	B	L Dim (cm)	Finish	Part Number
3-Piece 	Relaxed Assembly 	Single	Hex 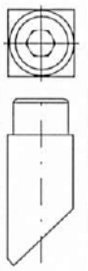	Rivet	.256 (6.50)	.225 (5.71)	2.8 (7.11)	Chemical Conversion Black Anodize Black Hard Anodize	**53S22-1-1AA** **53S22-1-1AB** **53S22-1-1AC**
		Double	Hex 	Screw	.235 (5.93)	.210 (5.33)	3.0 (7.62)	Chemical Conversion Black Anodize Black Hard Anodize	**53S122-1-1AC** **53S122-1-1AB** **53S122-1-1AA**
5-Piece 	Relaxed Assembly 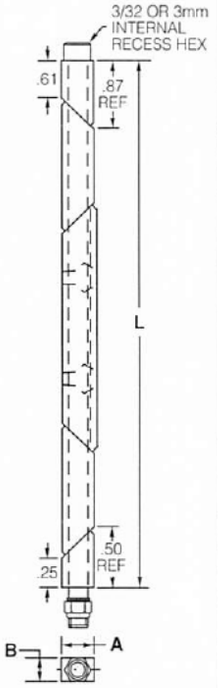	Single	Hex 	Rivet	.256 (6.50)	.225 (5.71)	5.8 (14.73)	Chemical Conversion Black Anodize Black Hard Anodize	**53S52-1-2AA** **53S52-1-2AB** **53S52-1-2AC**
		Double	Hex 	Screw	.275 (5.97)	.210 (5.33)	5.0 (12.7)	Chemical Conversion Black Anodize Black Hard Anodize	**53S121-1-1AC** **53S121-1-1AB** **53S121-1-1AA**
			Hex 	Screw	.256 (6.50)	.225 (5.71)	6.8 (17.27)	Chemical Conversion Black Anodize Black Hard Anodize	**53S120-1-1AA** **53S120-1-1AB** **53S120-1-1AC**
			Slot 	Screw	.256 (6.50)	.225 (5.71)	6.8 (17.27)	Chemical Conversion Black Anodize Black Hard Anodize	**53S120-1-2AA** **53S120-1-2AB** **53S120-1-2AC**

Notes:
1. Materials and Finishes are detailed on Page E-2.
2. See "Installation" for expanded assembly characteristics.
3. Alternate variations are available. Contact the Engineering Department of Camloc/Ram.

Get quote

Angic Global Solutions 1-888-872-0690
https://www.AngicGlobal.com Sales@AngicGlobal.com

54S Series. Standard Continuous Thread Versions

Style	Dimensions	Ratchet	Mount	A	B	L Dim (cm)	Finish	Part Number
3-Piece 	Relaxed Assembly 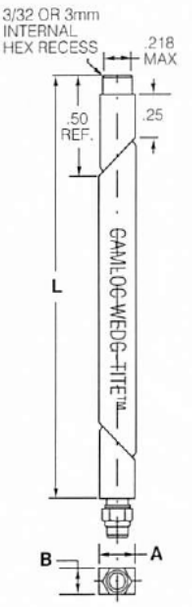	Hex 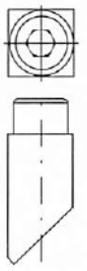	Rivet	.256 (6.50)	.225 (5.71)	2.8 (7.11)	Chemical Conversion Black Anodize Black Hard Anodize	**54S19-1-1AA** **54S19-1-1AB** **54S19-1-1AC**
			Screw	.256 (5.93)	.225 (5.33)	6.22 (15.8)	Chemical Conversion Black Anodize Black Hard Anodize	**54S125-1-1AA** **54S125-1-1AB** **54S125-1-1AC**
		Hex w/Lock Washer 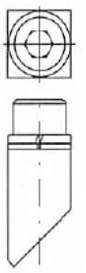	Rivet	.256 (6.50)	.225 (5.71)	2.8 (7.11)	Chemical Conversion Black Anodize Black Hard Anodize	**54S19-1-4AA** **54S19-1-4AB** **54S19-1-4AC**
5-Piece 	Relaxed Assembly 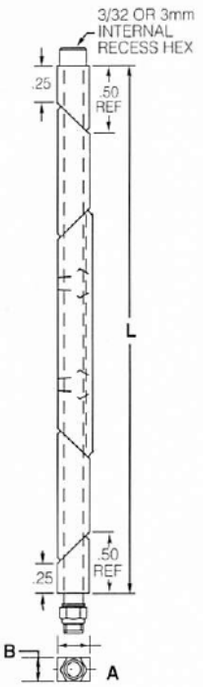	Hex 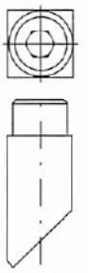	Rivet	.256 (6.50)	.225 (5.71)	7.50 (19.05)	Chemical Conversion Black Anodize Black Hard Anodize	**54S39-1-1AA** **54S39-1-1AB** **54S39-1-1AC**
			Screw	.460 (11.68)	.475 (12.06)	11.48 (29.16)	Chemical Conversion Black Anodize Black Hard Anodize	**54S57-1-1AA** **54S57-1-1AB** **54S57-1-1AC**
		Hex w/Lock Washer 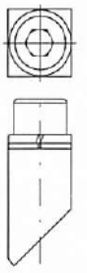	Rivet	.256 (6.50)	.225 (5.71)	7.85 (19.94)	Chemical Conversion Black Anodize Black Hard Anodize	**54S36-1-1AA** **54S36-1-1AB** **54S36-1-1AC**

Notes:
1. Materials and Finishes are detailed on Page E-2.
2. See "Installation" for expanded assembly characteristics.
3. Alternate variations are available. Contact the Engineering Department of Camloc/Ram.

E

ANGIC
Get quote
Angic Global Solutions 1-888-872-0690
https://www.AngicGlobal.com Sales@AngicGlobal.com

Installation

Wedg-Tite Retainers mount directly to the PC board using machine screws or rivets.

Typical 3-Piece, Rivet Mount Configuration

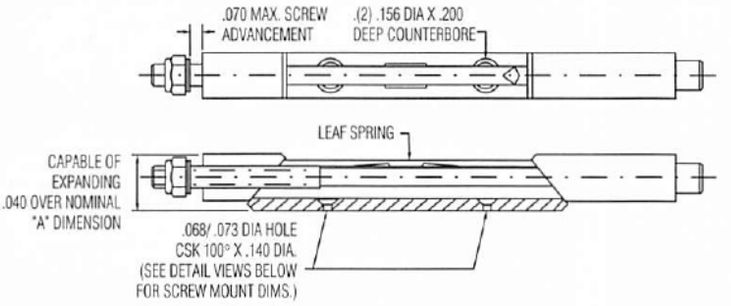

For Optimal Performance:
Allow for wedge expansion of .02-.04 over "A" dimension.

Alignment Leaf Spring

A special alignment spring ensures fast and easy insertion. Each spring is custom designed for the type of Wedg-Tite fastener required. As a result, the wedges remain aligned and ready for insertion into the card cage. The three or five wedges remain in a straight line instead of hanging loosely on the stud. Without the spring, the wedges may become misaligned during installation causing their edges to catch on the cold plate or PCB, resulting in cumbersome and slow insertion.

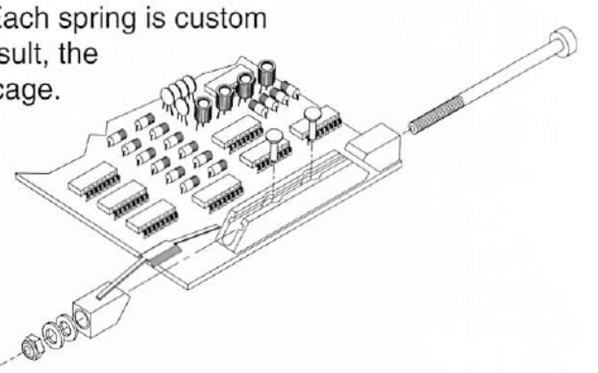

Mounting Dimensions

Rivet Mount Section

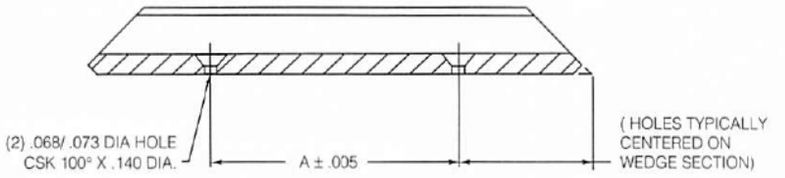

Screw Mount Section

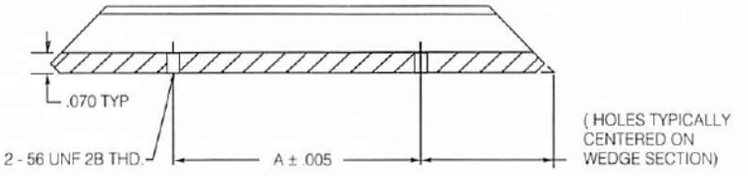

A-Dimension – Rivet and Screw Spacing

Series	A Dimension (cm)	
53S22-1	.900	(2.29)
53S75-1	1.250	(3.17)
53S122-1	1.250	(3.17)
53S52-1	.900	(2.29)
53S65-1	1.250	(3.17)
53S120-1	1.900	(4.83)
54S19-1	.900	(2.29)
54S125-1	3.9	(9.91)
54S39-1	1.9	(4.83)
54S57-1	2.7	(6.86)
54S36-1	2.05	(5.21)

PC Board Preparation

Countersunk hole for flathead screws is recommended to eliminate any protrusions.

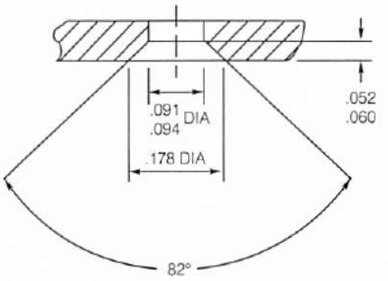

Get quote

Angic Global Solutions 1-888-872-0690
https://www.AngicGlobal.com Sales@AngicGlobal.com

Custom Insertion/Extraction Devices

As the number of connector pins on a PCB increases, the force required to insert and extract the board also increases. We've recently developed several proprietary lever mechanisms for Wedg-Tite PCB Retainers. These devices take the struggle out of installing and removing boards with many pins by providing a mechanical advantage.

Our most recent addition to this category is shown below. It conforms to the SEM-E module systems used in avionics. This design, in particular, answers the need of extracting and engaging the PCB modules without the aid of tools.

These specialized Wedg-Tite PCB Retainers are designed per your requirements. Please contact Camloc for further information on the SEM-E version or other specialized Wedg-Tite designs.

End View

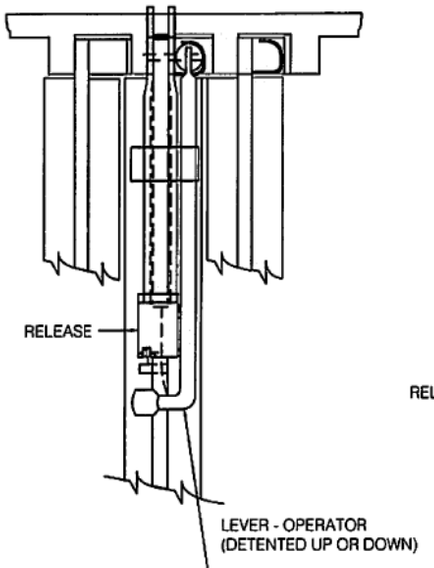

Side View

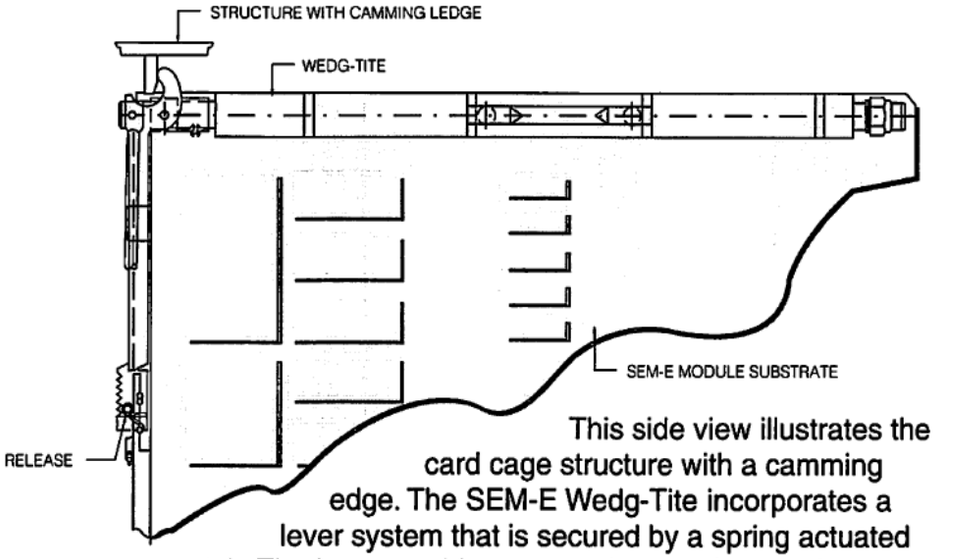

This side view illustrates the card cage structure with a camming edge. The SEM-E Wedg-Tite incorporates a lever system that is secured by a spring actuated catch. The lever provides a smooth, even force to be applied to the PCB when either installing or removing the module.

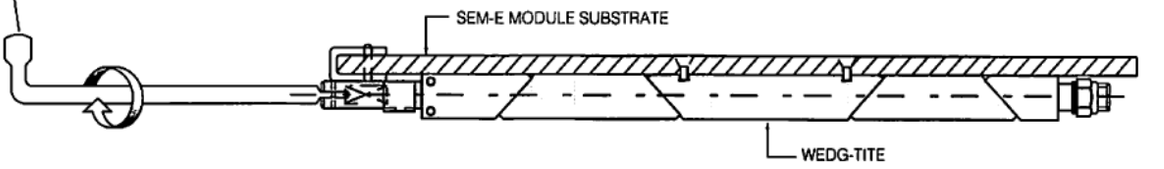

A top view shows how the Wedg-Tite torque actuator (separate from the lever) is pivoted down to a position extending from the end of the Wedg-Tite retainer. In this position the actuator is rotated to expand or relax the wedge segments. No tools are needed.

E

ANGIC
Get quote
Angic Global Solutions 1-888-872-0690
https://www.AngicGlobal.com Sales@AngicGlobal.com

Self-Compensating Injector/Ejector Levers

Features & Benefits

- Provide consistent self-compensation for board tolerances.
- Ensures required insertion and extraction forces on PCB up to 80 lbs. per lever.
- Maintain required retaining force.
- Release assist mechanism.

With only a few pounds of finger pressure, our series of PCB Injector/Ejector Levers provide 10 times that amount of pressure to positively mate PCB connectors. They also lock boards into card cages, preventing disconnects due to shock and vibration. Levers are designed to withstand the rigid requirements of the aerospace industry.

How it Operates

The Injector/Ejector Lever Pawl engages the card cage as the lever is pivoted down towards the PCB. The pawl incorporates a roller which travels on a tuned leaf spring. This spring/pawl combination maintains a consistent, predetermined insertion force. When fully inserted, the lever latches either directly to the PCB or a separately installed strike, depending on series selected.

As the lever is raised, it's heel against the card cage becomes the fulcrum in the multiplying transference of finger pressure to PCB extraction force.



Patent Pending

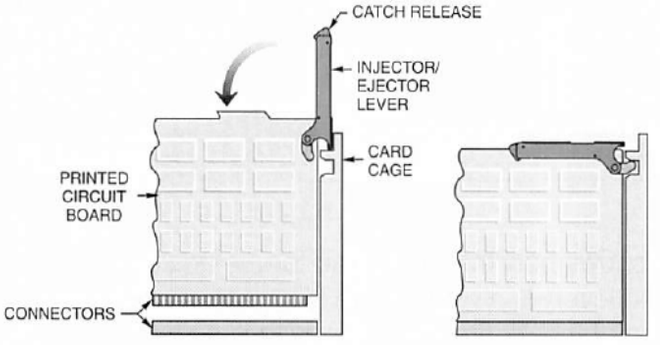

Get quote

Angic Global Solutions 1-888-872-0690
https://www.AngicGlobal.com Sales@AngicGlobal.com

Style	Dimensions	PCB Thickness	Insertion/ Extraction Force,lbs.	Materials/ Finish	Weight oz. (g)	Part Number
Style 1 	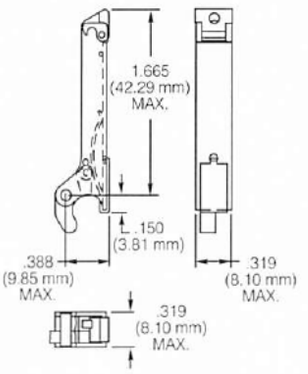	.100 (2.540)	10 to 30 (5 to 14)	6061-T6 Aluminum/ Hard Black Anodize	.19 (5.3)	**30E01-1-1AA**
	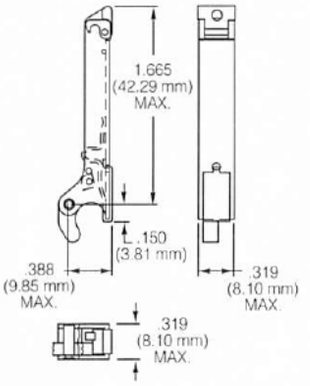	.100 (2.540)	45 to 80 (20.41 to 36) with 0 to 10 (0 to 5) Retaining Force IEEE 1101.9 Compatible	6061-T6 Aluminum/ Hard Black Anodize	.19 (5.3)	**60E01-1-1AA**
Style 2 	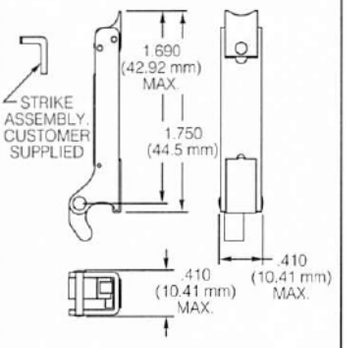	.100 (2.540)	10 to 30 (5 to 14)	6061-T6 Aluminum/ Hard Black Anodize Strike: User Supplied	.26 (7.5)	**134L01-1-1AA**
	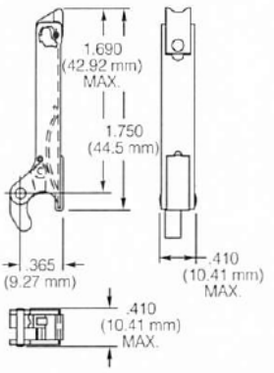	.100 (2.540)	10 to 30 (5 to 14)	6061-T6 Aluminum/ Hard Black Anodize	.26 (7.5)	**134L01-2-1AA**

E

Note: Other styles a

Get quote

Angic Global Solutions 1-888-872-0690
https://www.AngicGlobal.com Sales@AngicGlobal.com

Step Pin Installation

1. Insert pivot pin through lever body, pawl and heat sink as shown.

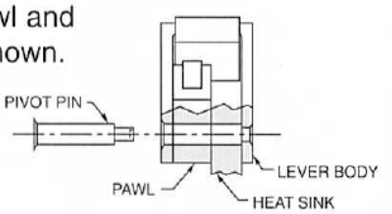

2. Grip assembly with flaring pliers. Make sure that the flaring point on the pliers is making contact with the center hole on the small end of the pivot pin.

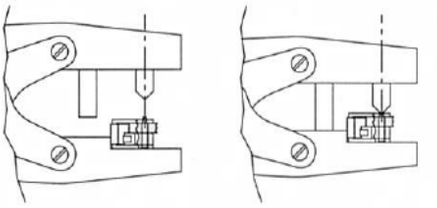

Step Pin Removal

1. Place removal tool over lever with point on the center of the flared end of the pivot pin.

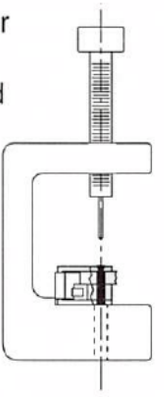

2. Tighten screw until pin is forced through the slot on the bottom of the tool.

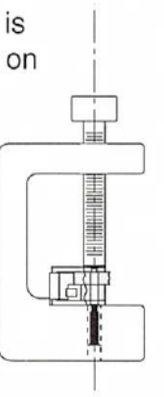

Installation and Removal Tool – 40E01 and 60E01 Series

Description	Part Number
Pivot Pin Installation Pliers 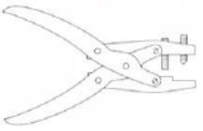	**CIT-3007**
Pivot Pin Removal Press 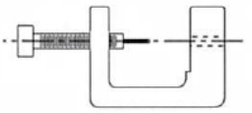	**CRT-3008**

Spiral Pin Installation

1. Customer supplied spiral pin is pressed into place.

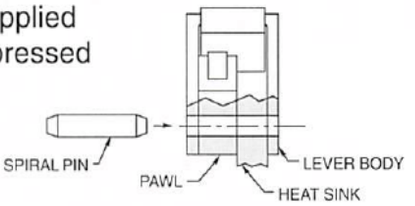

Get quote

Angic Global Solutions 1-888-872-0690
https://www.AngicGlobal.com Sales@AngicGlobal.com

Get quote

Angic Global Solutions 1-888-872-0690
https://www.AngicGlobal.com Sales@AngicGlobal.com

Secure line replaceable avionics with positive-locking RAM Hold-Down Devices.

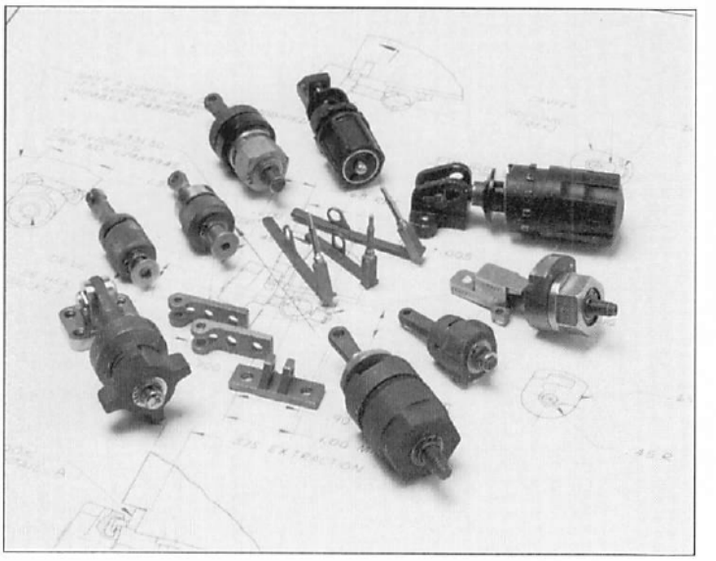

Features & Benefits

- Protect critical electronics from shock, vibration and acceleration.
- Self-Locking and Load Limiting version.
- Tool or hand operation.
- ARINC 600 and MIL-F-85731 applications.

The Camloc/Ram design team has developed a complete family of ergonomically designed ratcheting and ultra-lightweight clutching hold-downs, hooks and hinges. All are built to resist extremes in shock and vibration, yet they allow quick change capability.

Our engineers are continuing to design smaller units for higher loads to solve both your avionic box and printed circuit card hold-down problems. So let Camloc/Ram be your problem solver... whether it's loads in excess of 5000 lbs., clutching loads of 450 lbs. or more...easy hand or tool operations...30 "G" shock loads or gunfire vibrations...ARINC 600 applications or MIL-F-85731 (MS14108) requirements.

These pages detail the RAM Hold-Down Devices that will meet the requirements of most engineers. However, if you don't see a design in this catalog that will suit your application, consult one of our field sales engineers for a solution to meet your specific needs.

Styles

Two major sub-divisions of hold-downs exist: Load Limiting and Self-Locking. Self-locking versions are used for securing heavy loads, up to 5000 pounds. Load limiting are used to precisely control the insertion and extraction of avionic devices with multi-pin connectors.

3° Extraction Angle...No Bent Pins.

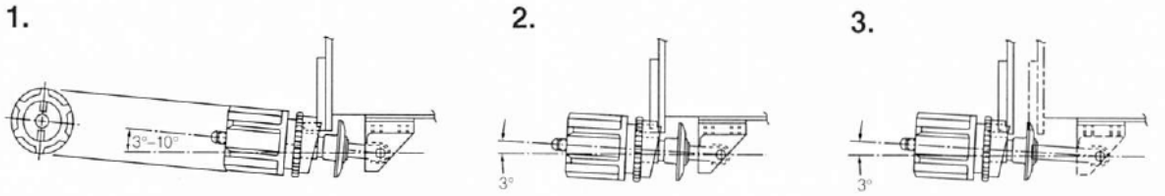

1. Hold-down in fully clutched and seated position (3°-10°). 2. As extraction is begun, by turning knob counterclockwise, the center shaft is pushed back and pivoted upward. Angle of shaft is reduced to 3° before extraction occurs. 3. Full half-inch extraction takes place with no more than 3° of upward force placed upon avionics. Connector pins are never bent.

ANGIC GLOBAL SOLUTIONS
Get quote
Angic Global Solutions 1-888-872-0690
https://www.AngicGlobal.com Sales@AngicGlobal.com

Typical Operation

Load Limiting Versions

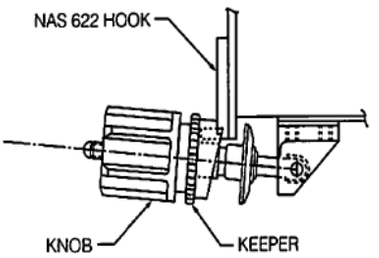

1. Assembly lifts to clear NAS 622 hook. Keeper is rotated to captivate hold-down assembly to the hook. Knob is rotated clockwise to seat the box in place. Clutch mechanism will control the clamping force within a rage of 100 to 140 pounds.

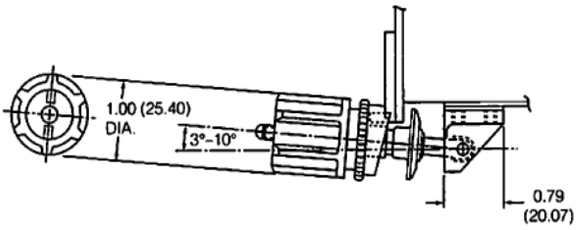

2. Fully installed in locked position.

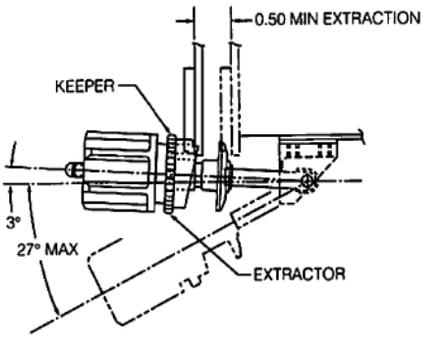

3. Shown here in the extraction mode. This is achieved by simply turning the knob counterclockwise. To release from hook, keeper is pulled back and rotated 180° and assembly falls free.

Self-Locking Versions

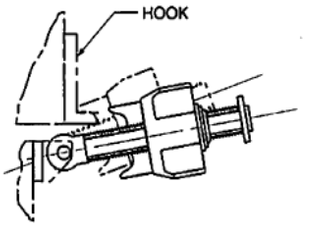

1. To lock, lift assembly to clear HD13001 Series hook.

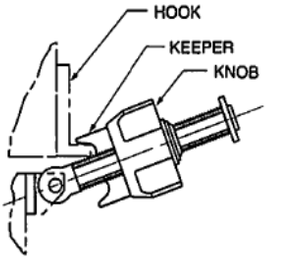

2. Rotate knob clockwise to engage hook with keeper. Continue clockwise rotation to seat box.

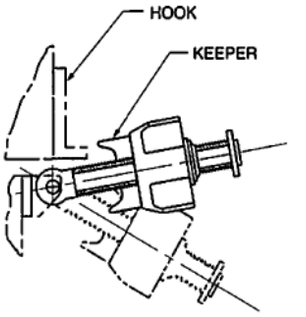

3. To unlock, rotate knob counterclockwise until keeper clears hook. There is no need to pull back on knob to release ratchet with RAM Hold-Down Devices.

Optional Head Styles

Hand and tool operated knob can be turned by hand or torque wrench.

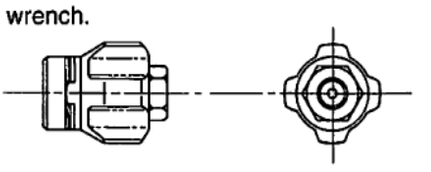

Hex head knob designed for torque wrench operation.



Hand operated knob is easy to grip for high torque.

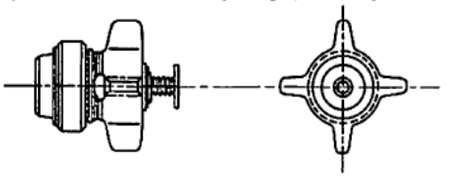

E

With Integral Hinges

Series	Dimensions	Material/ Finish
HD12006 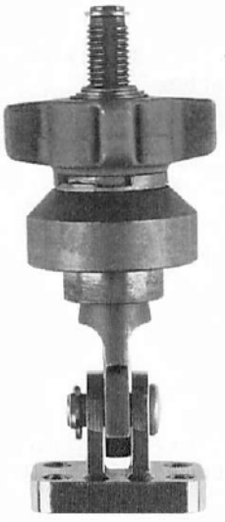	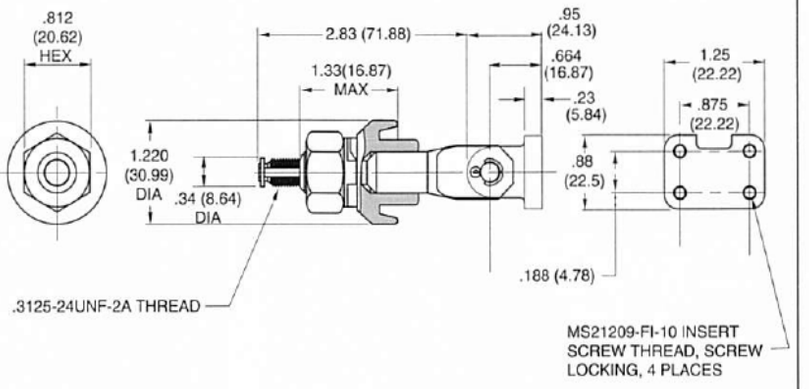	Knob: 416 CRES/ Passivate Clevis Bolt: PH 13-8 MO CRES/ Dry Film Lube Nosepiece: PH 13-8 MO CRES/Passivate Dry Film Lube
	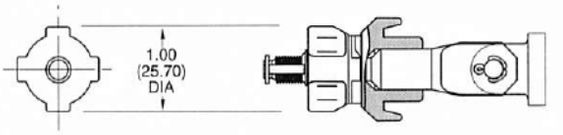	Knob: 2024-T3511 Aluminum/ Hard Anodize or 2024-T4 Aluminum/ Hard Anodize
	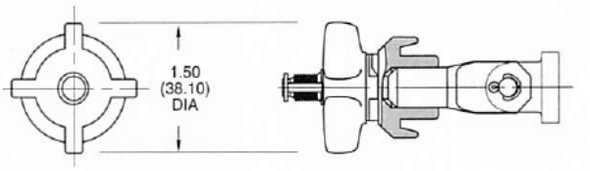	Knob: A356-T6 Aluminum/ Hard Anodize

Dimensions specified in inches (millimeters) and pounds (kilograms).
Note: Variables may not represent the same dimensions on all series numbers.

Get quote
Angic Global Solutions 1-888-872-0690
https://www.AngicGlobal.com Sales@AngicGlobal.com

Installation Reference - Typical

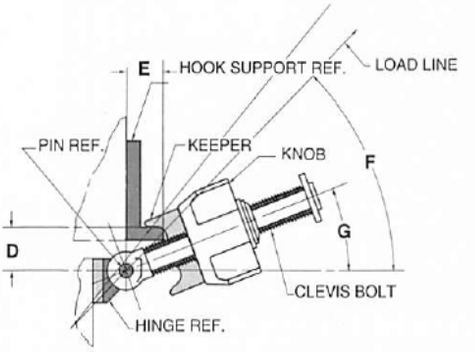

	Ultimate Load, lbs.	Weight, lbs.	A	B Min Grip	C DIA	Values Per Diagram Above				Part Number
						D	E	F	G	
	5500 (2,495)	0.16 (0.072)	–	–	–	0.904 (22.961)	0.904 (22.961)	45°	20°	**HD12006-101**
	5500 (2,495)	0.16 (0.072)	–	–	–	0.904 (22.961)	0.904 (22.961)	45°	20°	**HD12006-102**
	5500 (2,495)	0.16 (0.072)	–	–	–	0.904 (22.961)	0.904 (22.961)	45°	20°	**HD12006-103**

E

With Separate Hinges

Series	Dimensions	Material/ Finish
HD12026 	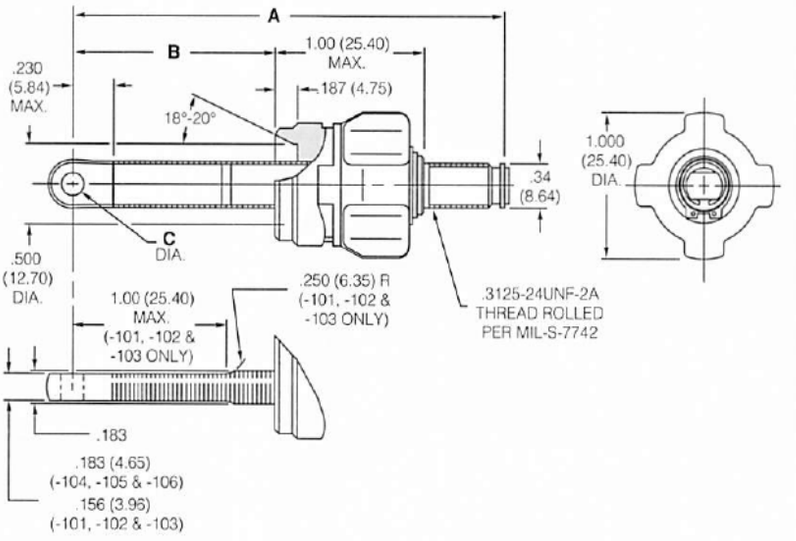 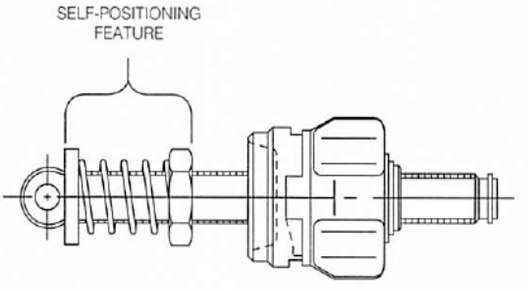	Knob: 2024-73511 Hard Anodize Clevis Bolt: 17-4PH CRES/ Passivate Nosepiece: 304 or 316 CRES/ Passivate or 15-5PH CRES/ Passivate Spring: 17-7PH CRES/ Passivate

Dimensions specified in inches (millimeters) and pounds (kilograms).
Note: Variables may not represent the same dimensions on all series numbers.

Get quote
Angic Global Solutions 1-888-872-0690
https://www.AngicGlobal.com Sales@AngicGlobal.com

Installation Reference - Typical

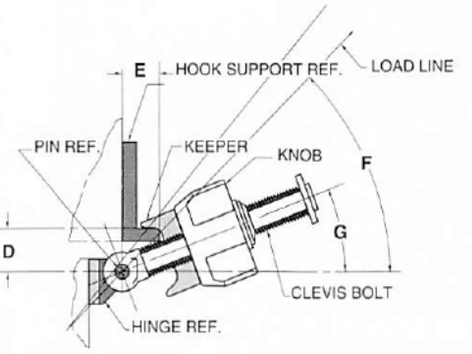

Ultimate Load, lbs.	Weight, lbs.	A	B Min Grip	C DIA	Values Per Diagram Above				Part Number
					D	E	F	G	
1000 (454)	0.15 Max. (0.068)	2.03 (51.56)	1.000 (25.400)	0.128 (3.251)	0.418 ± 0.020 (10.617 ± 0.508)	0.418 ± 0.020 (10.617 ± 0.508)	45°	20°	**HD12026-101**
		2.41 (61.24)	1.375 (34.925)						**HD12026-102**
		2.91 (73.91)	1.875 (47.625)						**HD12026-103**
2000 (907)	0.15 Max. (0.068)	2.03 (51.56)	1.000 (25.400)	0.160 (40.64)					**HD12026-104**
		2.41 (61.24)	1.375 (34.925)						**HD12026-105**
		2.91 (73.91)	1.875 (47.625)						**HD12026-106**
1000 (454)	0.20 (0.09) Max.	2.03 (51.56)	1.000 (25.400)	0.128 (3.251)	0.418 ± 0.020 (10.617 ± 0.508)	0.418 ± 0.020 (10.617 ± 0.508)	45°	20°	**HD12026-101 CP**
		2.41 (61.24)	1.375 (34.925)						**HD12026-102 CP**
		2.91 (73.91)	1.875 (47.625)						**HD12026-103 CP**
2000 (907)	0.20 (0.09) Max.	2.03 (51.56)	1.000 (25.400)	0.160 (4.064)					**HD12026-104 CP**
		2.41 (61.24)	1.375 (34.925)						**HD12026-105 CP**
		2.91 (73.91)	1.875 (47.625)						**HD12026-106 CP**

E

With Separate Hinges

Series	Dimensions	Material/ Finish
HD12023 	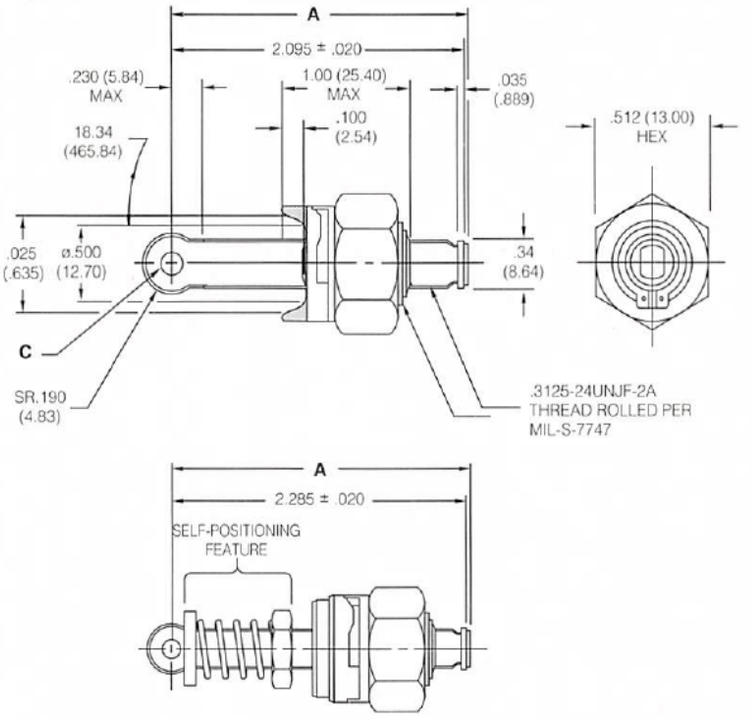	Knob: 416 CRES/ Passivate Clevis Bolt: 17-4PH CRES/Passivate Nosepiece: 15-5PH CRES/ Passivate Spring: 17-7PH CRES
HD12017 	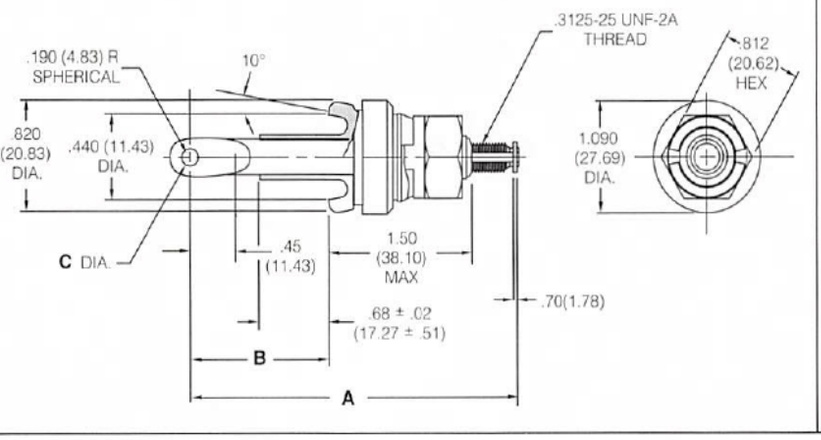	Knob: 416 CRES/ Passivate Clevis Bolt: PH 13-8 MO CRES/Passivate Nosepiece: 17-4 PH CRES/ Passivate

Dimensions specified in inches (millimeters) and pounds (kilograms).
Note: Variabl

Get quote
Angic Global Solutions 1-888-872-0690
https://www.AngicGlobal.com Sales@AngicGlobal.com

Installation Reference - Typical

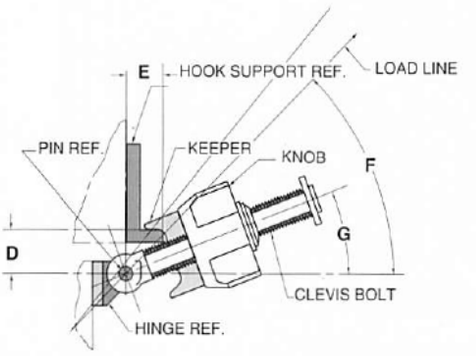

	Ultimate Load, lbs.	Weight, lbs.	A	B Min Grip	C DIA	Values Per Diagram Above				Part Number
						D	E	F	G	
	2000 (907)	0.17 (0.077)	2.130 (54.102)	–	0.160 / 0.163 (4.064 / 4.140)	0.418 ±. 0.020 10.617 ± 0.508	0.418 ±. 020 (10.617 ± 0.508)	45°	20°	**HD12023-101**
	2000 (907)	0.25 (0.113) Max.	2.320 (58.928)							**HD12023-102**
	3500 (1,588)	0.17 (0.077)	3.30 (83.82)	1.20 (30.48)	0.160 / 0.163 (4.064 / 4.140)	0.75 (19.05)	–	32.50°	15°	**HD12017-101**

E

Get quote
Angic Global Solutions 1-888-872-0690
https://www.AngicGlobal.com Sales@AngicGlobal.com

With Separate Hinges

Series	Dimensions	Material/ Finish
HD12031 	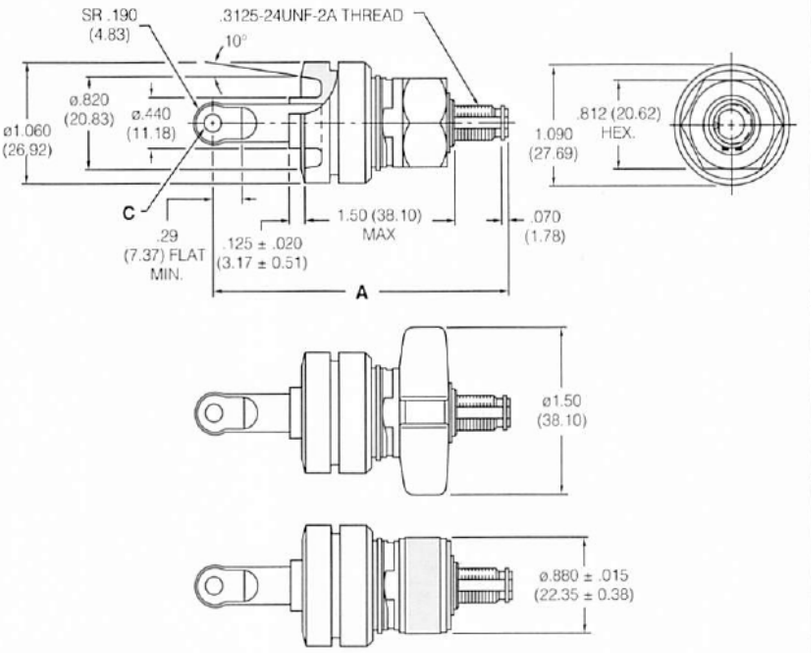	*Knob: 416 CRES/ Passivate Clevis Bolt: PH 13-8 MO CRES/Passivate Nosepiece: 17-4PH CRES/Passivate *Knob: A356-T6 Aluminum/Hard Anodize *Knob: 2024 Aluminum/Hard Anodize
HD12032 	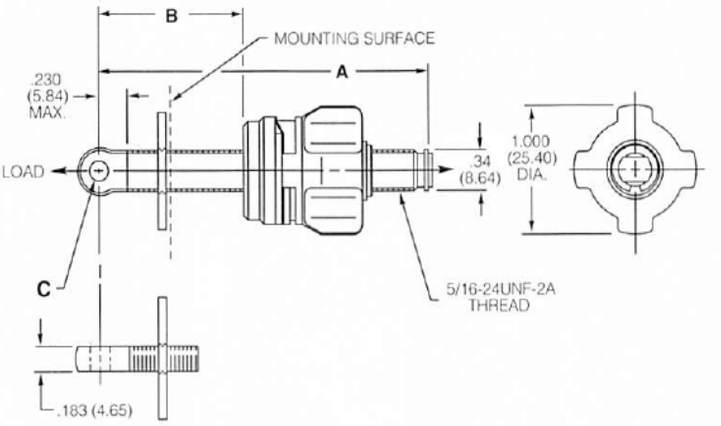	Knob: 2024-73511 2024-T4 Hard Anodize Clevis Bolt: 17-4PH CRES/Passivate Dry Film Lube Nosepiece: 304 or 316 CRES/Passivate or 15-5PH CRES/Passivate Dry Film Lube

Dimensions specified in inches (millimeters) and pounds (kilograms).
Note: Variables may not represent the same dimensions on all series numbers.

Get quote
Angic Global Solutions 1-888-872-0690
https://www.AngicGlobal.com Sales@AngicGlobal.com

Installation Reference - Typical

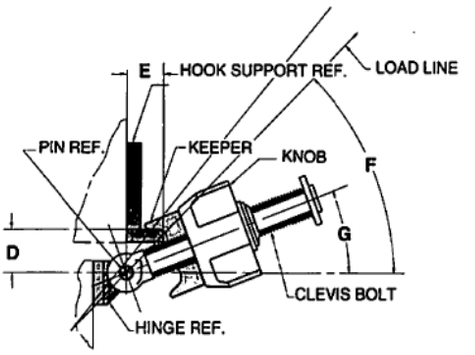

	Ultimate Load, lbs.	Weight, lbs.	A	B Min Grip	C DIA	Values Per Diagram Above				Part Number
						D	E	F	G	
	3500 (1,588)	0.16 (0.072)	2.80 (71.12)	–	0.160 / 0.163 (4.064 / 4.140)	0.658 (16.713)	0.658 (16.713)	45°	18°	**HD12031-101**
	3500 (1,588)	0.16 (0.072)	2.8 (71.12)	–	0.160 / 0.163 (4.064 / 4.140)	0.658 (16.713)	0.658 (16.713)	45°	18°	**HD12031-102**
	3500 (1,588)	0.16 (0.072)	2.80 (71.12)	–	0.160 / 0.163 (4.064 / 4.140)	0.658 (16.713)	0.658 (16.713)	45°	18°	**HD12031-103**
	2000 (907)	0.20 (0.090) Max.	2.03 (51.56) 2.41 (61.24) 2.91 (73.91)	1.000 (25.400) 1.375 (34.925) 1.875 (47.625)	0.160 / 0.163 (4.064 / 4.140)	–	–	–	90°	**HD12023-104** **HD12023-105** **HD12023-106**

E

Get quote
Angic Global Solutions 1-888-872-0690
https://www.AngicGlobal.com Sales@AngicGlobal.com

With Integral Hinges

Series	Dimensions	Material/ Finish
CA12096 	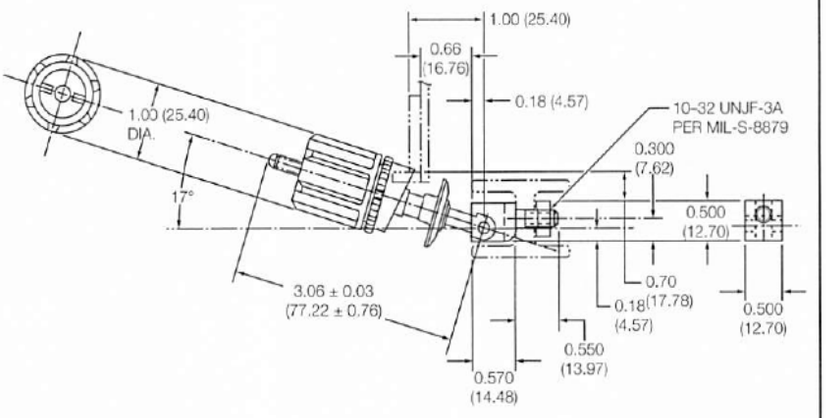	Sleeve: Glass Reinforced Polyester Resin Keeper and Extractor: Aluminum Alloy/ Anodize Hinge Base: Aluminum/ Anodize Center Shaft: CRES/Passivate or 4130 Alloy Steel/Cadmium Plated
CA12145 	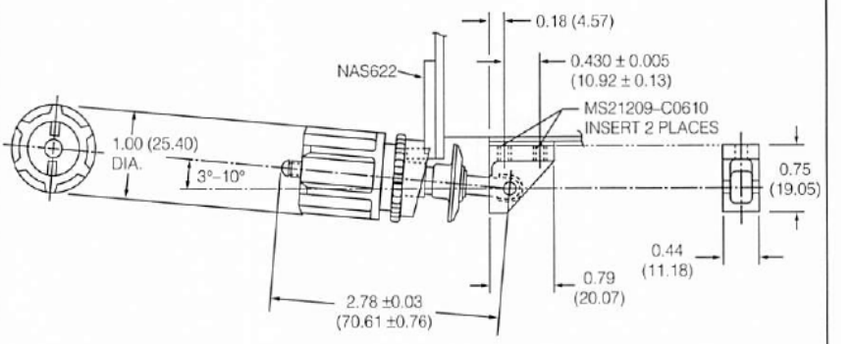	Sleeve: Glass Reinforced Polyester Resin Keeper, Extractor and Hinge Base: Aluminum Alloy/ Anodize Hinge Base: Aluminum/ Anodize Center Shaft: CRES/Passivate or 4130 Alloy Steel/Cadmium Plated

Dimensions specified in inches (millimeters) and pounds (kilograms).
Note: Variables may not represent the same dimensions on all series numbers.

Get quote
Angic Global Solutions 1-888-872-0690
https://www.AngicGlobal.com Sales@AngicGlobal.com

Load Diagram

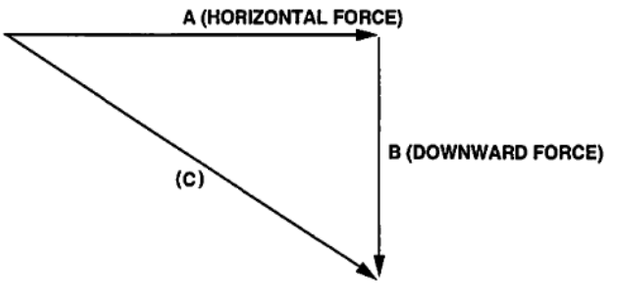

Ultimate Load, lbs.	Weight, lbs.	Clutch Load, lbs.	Values Per Diagram Above			Minimum Extraction	Part Number
			A	B	(C) Ref.		
500 (227)	0.15 (0.07) Max.	120 ± 20 (54 ± 9)	100 to 140 (45 to 64)	31 to 43 (14 to 20)	–	0.05 (12.70)	**CA12096-101**
500 (227)	0.13 (0.058) Max.	120 ± 20 (54 ± 9)	100 to 140 (45 to 64)	44 to 65 (20 to 30)	–	0.05 (12.70)	**CA12145-102**

E

Get quote
Angic Global Solutions 1-888-872-0690
https://www.AngicGlobal.com Sales@AngicGlobal.com

With Integral Hinges

Series	Dimensions	Material/ Finish
HD11097 	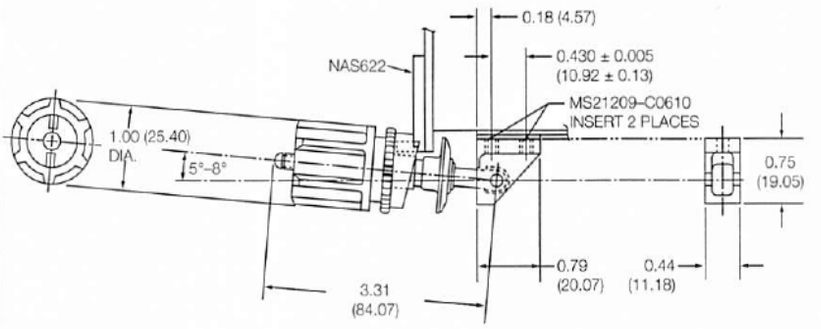	Sleeve: Glass Reinforced Polyester Resin Keeper, Extractor and Hinge Base: Aluminum/ Anodize Center Shaft: CRES/Passivated or 4130 Alloy Steel/Cadmium Plated
HD11098 	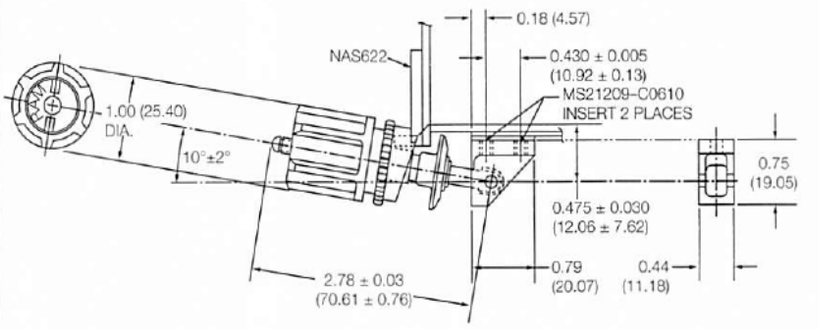	Sleeve: Glass Reinforced Polyester Resin Keeper, Extractor and Hinge Base: Aluminum/ Anodize Center Shaft: CRES/Passivated or 4130 Alloy Steel/Cadmium Plated

Dimensions specified in inches (millimeters) and pounds (kilograms).
Note: Variables may not represent the same dimensions on all series numbers.

Get quote
Angic Global Solutions 1-888-872-0690
https://www.AngicGlobal.com Sales@AngicGlobal.com

Load Diagram

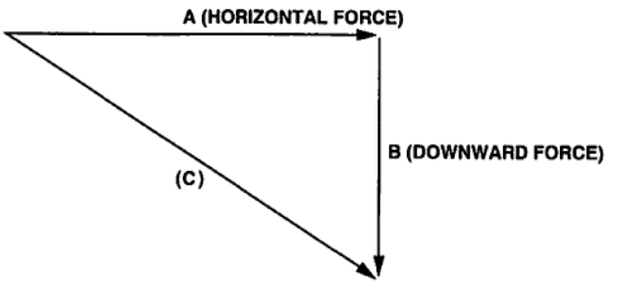

Ultimate Load, lbs.	Weight, lbs.	Clutch Load, lbs.	Values Per Diagram Above			Minimum Extraction	Part Number
			A	B	(C) Ref.		
500 (227)	0.13 (0.06) Max.	120 ± 20 (54 ± 9)	100 to 140 (45 to 64)	44 to 65 (20 to 29)	–	1.00 (25.40)	**HD-11097-101**
500 (227)	0.13 (0.06) Max.	150 ± 20 (68 ± 9)	130 to 170 (59 to 77)	71 to 93 (32 to 42)	–	0.05 (12.70)	**HD11098-101**

E

Get quote
Angic Global Solutions 1-888-872-0690
https://www.AngicGlobal.com Sales@AngicGlobal.com

With Separate Hinges

Series	Dimensions	Material/ Finish
HD11006 	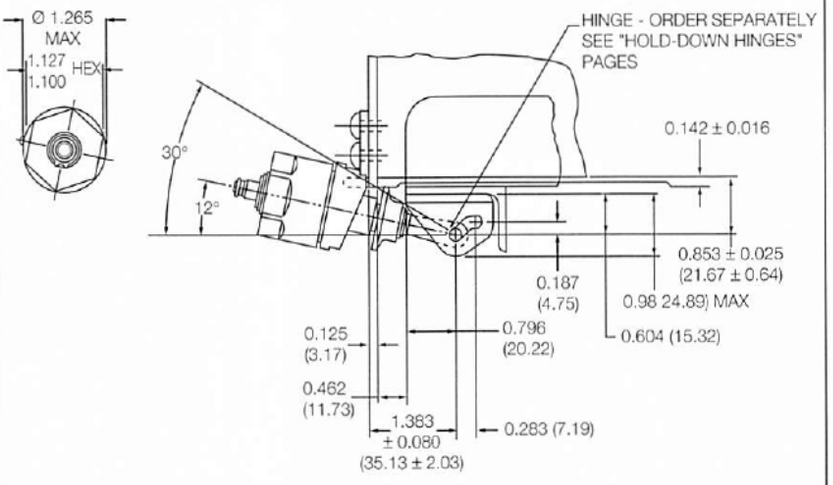 Note: See Hold-Down Hinges page.	Shaft: PH 13-8MO CRES/ Passivate Dry Film, Wet Lube Knob: A356-T6/ Hard Anodize Hook Connector: 17-4 PH CRES/Passivate Extractor: 7075-T6/Anodize

Dimensions specified in inches (millimeters) and pounds (kilograms).
Note: Variables may not represent the same dimensions on all series numbers.

Get quote
Angic Global Solutions 1-888-872-0690
https://www.AngicGlobal.com Sales@AngicGlobal.com

Load Diagram

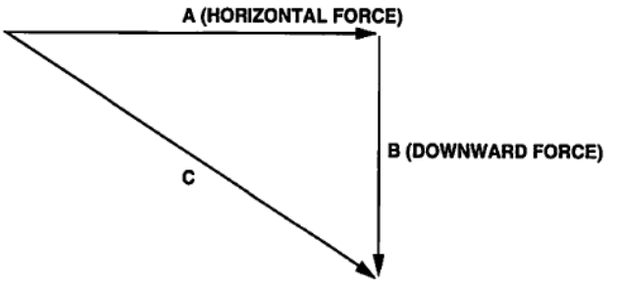

Ultimate Load, lbs.	Weight, lbs.	Clutch Load, lbs.	Values Per Diagram Above			Minimum Extraction	Part Number
			A	B	C		
2,000 (907)	0.42 (0.190) Max. With Hinge	150 (68)	150 (68) Min.	–	–	0.05 (12.70)	**HD11006-102**
		500 ± 50 (227 ± 23)	500 (227) Min.				**HD11006-103**

E

Dimensions	Material/ Finish	Weight, lbs.	Y	B	A	Part Number Hinge	Part Number Hinge Pin
For Hold-Down Series: **HD12026** **HD12023*** 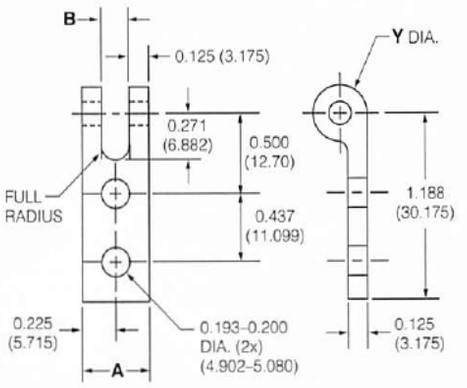	Alloy Steel/ Cadmium Plated	.025 (.011)	.130 (3.30)	0.197 (5.00)	0.450 (11.430)	**HD12026-115** **HD13002-101***	**HD12026-123**
				.312 (7.92)	0.566 (14.376)	**HD13019-101**	
			.162 (4.11)	.197 (5.00)	0.450 (11.430)	**HD12026-117** **HD13002-103***	
				.312 (7.92)	0.566 (14.376)	**HD13019-103**	
	CRES/ Passivate	.025 (.011)	.130 (3.30)	0.197 (5.00)	0.450 (11.430)	**HD12026-116** **HD13002-102***	**HD12026-124**
				.312 (7.92)	0.566 (14.376)	**HD13019-102***	
			.162 (4.11)	0.197 (5.00)	0.450 (11.430)	**HD12026-118** **HD13002-104***	
				.312 (7.92)	0.566 (14.376)	**HD13019-104***	
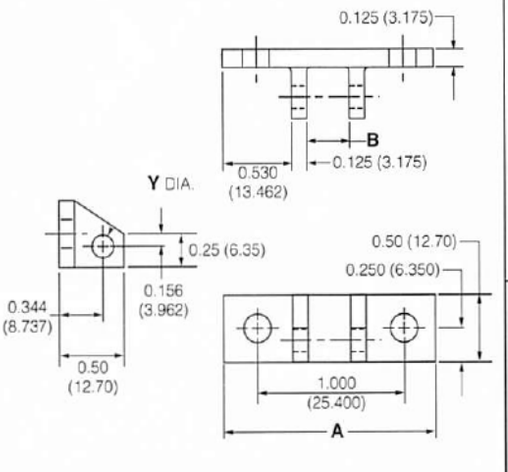 *Note for HD12023 Series Hold-Downs use Hinges: HD13002, HD13003, HD13019, or HD13020	Alloy Steel/ Cadmium Plated	.035 (.016)	.130 (3.30)	0.197 (5.00)	0.150 (35.10)	**HD12026-119** **HD13003-101***	**HD12026-123**
				.312 (7.92)	1.62 (41.148)	**HD13020-101***	
			.162 (4.11)	0.197 (5.00)	0.150 (35.10)	**HD12026-121** **HD13003-103***	
				.312 (7.92)	1.62 (41.148)	**HD13020-103**	
	CRES/ Passivate	.035 (.016)	.130 (3.30)	0.197 (5.00)	0.150 (35.10)	**HD12026-120** **HD13003-102***	**HD12026-124**
				.312 (7.92)	1.62 (41.148)	**HD13020-102**	
			.162 (4.11)	0.197 (5.00)	0.150 (35.10)	**HD12026-122** **HD13003-104***	
				.312 (7.92)	1.62 (41.148)	**HD13020-104**	
For Hold-Down Series: **HD12031** 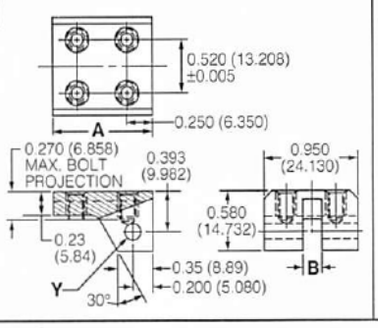	6061-T6 Aluminum Alloy/ Anodize	.060 (.027)	.162 (4.11)	.205 (5.207)	1.00 (25.40)	**HD13024-101**	**HD14005-101**

Dimensions specified in inches (millimeters) and pounds (kilograms).
Note: Variables may not represent the same dimensions on all series numbers.

ANGIC GLOBAL SOLUTIONS
Get quote
Angic Global Solutions 1-888-872-0690
https://www.AngicGlobal.com Sales@AngicGlobal.com

Hinge Dimensions	Material/ Finish	Weight, lbs.	Y	B	A	Part Number Hinge	Part Number Hinge Pin
For Hold-Down Series: HD11002 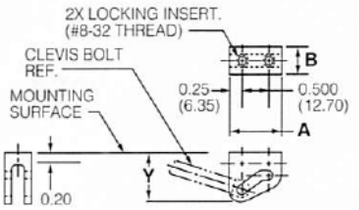	17-4PH Stainless Steel/ Passivate	.030 (.013) Max.	.90 (22.86)	0.50 (12.70)	1.00 (25.40)	**HD13008-101**	
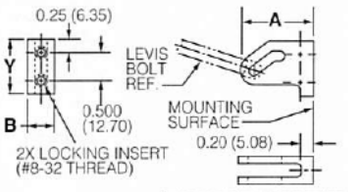	17-4PH Stainless Steel/ Passivate	.030 (.013) Max.	1.00 (25.40)	0.50 (12.70)	1.40 (35.56)	**HD13009-101**	
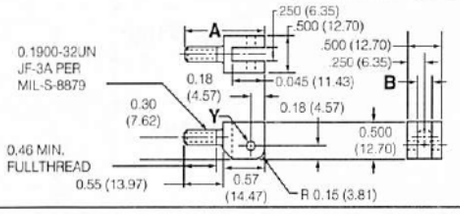	303 CRES/ Passivate	.030 (.013) Max.	0.128 (3.25) Dia.	.196 - 1.200 (4.98 - 5.08)	1.12 (28.45)	**CA12084-101**	
For Hold-Down Series: HD11003 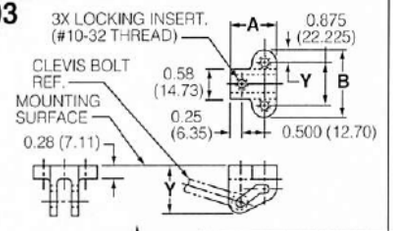	17-4PH Stainless Steel/ Passivate	.040 (.018) Max.	1.00 (25.40)	1.38 (35.05)	1.00 (25.45)	**HD13011-101**	
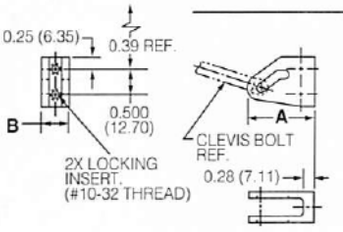	17-4PH Stainless Steel/ Passivate	.040 (.018) Max.	1.00 (25.40)	.58 (14.73)	1.40 (25.45)	**HD13012-101**	

For Hold-Down Series: HD11006	Material/ Finish	Weight, lbs.	A	B	C	D	Part Number Hinge	Part Number Hinge Pin
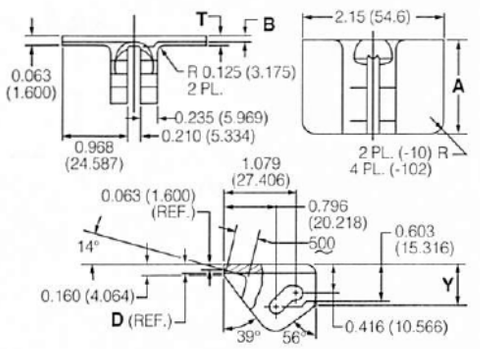	7050 - T.73511 Aluminum Alloy/ Anodize	.090 (.040) Max.	1.364 (34.64)	.125 (3.17)	0.163 (15.57)	.125 (3.17)	**HD13021-101**	**MS20392-2R Straight Pin and MS24665-1012 Cotter Pin**
			1.630 (41.40)	.160 (4.06)	0.434 (11.02)	.160 (4.06)	**HD13021-102**	

E

Get quote

Angic Global Solutions 1-888-872-0690
https://www.AngicGlobal.com Sales@AngicGlobal.com

Selected Hold-Down Series	Hinge Dimension	Material/ Finish	Weight, lbs.	X Dia.	A	Hook Support Part Number
HD12023 **HD12026**	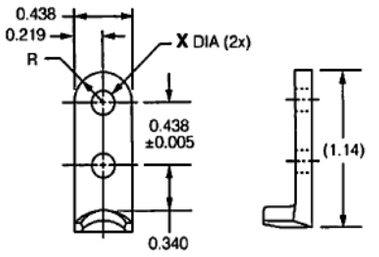	4140 Alloy Steel/ Cadmium Plated	.020 (.009)	.169 (4.429)	–	**HD13001-101** **HD13001-102**
		17-4 CRES/ Passivate	.020 (.009)	.195 (4.95)	–	**HD13001-103** **HD13001-104**
	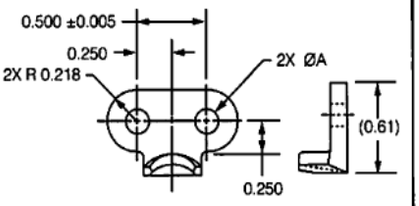	4140 Alloy Steel/ Cadmium Plated	.020 (.009)	.169 (4.29)	–	**HD13001-105** **HD13001-106**
		17-4 CRES/ Passivate	.020 (.009)	.195 (4.95)	–	**HD13001-107** **HD13001-108**
HD11002 **HD11003**	–	–	.020 (.009)	–	–	**MS14108***
CA12090 **CA12145** **HD11006** **HD11098**	–	–	.020 (.009)	–	–	**NAS622***
HD12031	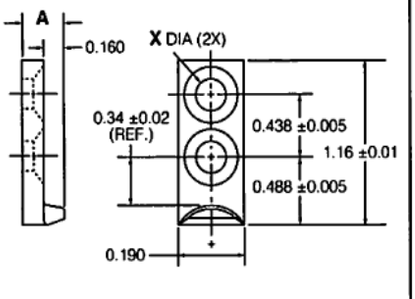	PH13-8MO CRES/ Passivate Heat Treat to 180,000 PSI Min.	.025 (.011)	0.211 (5.36) thru C'Sink 100° x 0.395	0.310 (7.87)	**HD13023-101**
		PH13-8MO CRES/ Passivate Heat Treat to 220,000 PSI Min.				**HD13023-102**
HD12006	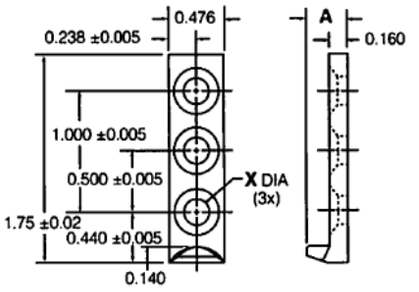	17-4 CRES/ Passivate	.032 (.014)	0.219 (5.56)	0.310 (7.87)	**HD13000-102**
		17-4 CRES/ Passivate A-286 Steel/ Passivate	.032 (.014)	0.219 (5.56)	0.360 (9.14)	**HD13000-101**
HD11000	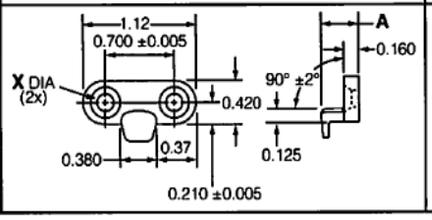	15-5PH CRES/ Passivate	.020 (.009)	0.156 (3.96)	0.380 (9.65)	**HD13006-101**

* Available at local distributor.

Dimensions specified in inches (millimeters) and pounds (kilograms).
Note: Variables may not represent the same dimensions on all series numbers.

Get quote

Angic Global Solutions 1-888-872-0690
https://www.AngicGlobal.com Sales@AngicGlobal.com

CHASSIS LATCHES

SELECTOR GUIDE

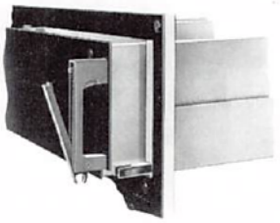

Camloc Chassis Latches offer a wide range of styles, strengths, materials and finishes. Included in this catalog are versions which meet requirements of NAS1637.

Most application requirements can be met by one of the many Camloc Chassis Latches shown in this catalog. However, the Camloc Products Division is geared to provide solutions to all types of special fastening problems. *If you don't see a design in this catalog that will suit your application, consult one of our field sales engineers for a solution to meet your specific needs.*

Basic Chassis Latch Components:

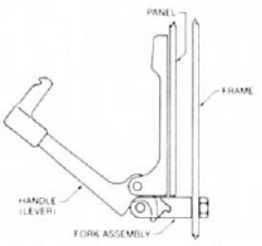

21L Series

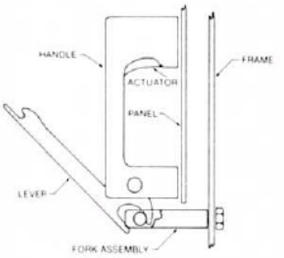

40L/61L/72L Series (Typical)

Design and Features:

Camloc Chassis Latches secure removable electronic drawers as well as function as carrying handles. Each latch has a built-in lever (see above illustrations) which, when engaged with the fork assembly, provides a mechanical advantage with sufficient force to connect and disconnect electronic pin connectors, compress RFI gaskets, etc.

Typical fork assemblies:

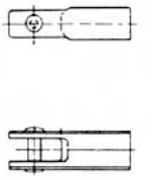

Non-adjustable Version
(Use shims at mounting point to compensate for grip variations.)

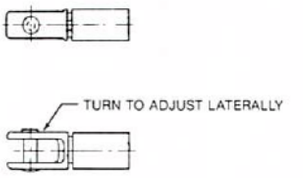

Adjustable Version
(Provides .250 max. mechanical adjustment.)

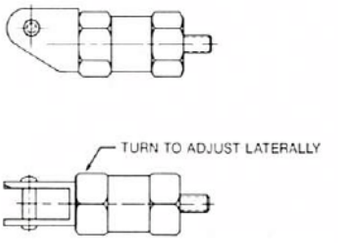

Self-compensating Version
(Provides .200 mechanical adjustment plus .192 self-compensating travel.)

Mating fork assemblies come in non-adjustable, adjustable and self-compensating versions. Shims are available for non-adjustable versions to compensate for grip variations at installation. Other fork assemblies can be mechanically adjusted after installation or are self-adjusting.

E

Contents

Series Number	Page Number	Specifications					Features				
		Strength (lbs.)		Mechanical Advantage		Handle Carrying Load (lbs.)	Meets NAS1637	Adjustable Fork Assembly Available	Self-Compensating Fork Assembly Available	Various Handle Lengths Available	Safety Wire Hole Available
		Ultimate	Working	Disengagement Ratio	Engagement Ratio						
21L	E-30-E-33	600	400	8 to 1	6 to 1	200 Max.				●	●
40L	E-30-E-33			10 to 1	9 to 1						
61L	E-34-E-39	*	*	*	*	500 Max.	●	●	●	●	●
72L	E-40-E-43	2000	1333					●		●	●

*Varies by part number.

● = Illustrated in catalog.

ANGIC GLOBAL SOLUTIONS
Get quote
Angic Global Solutions 1-888-872-0690
https://www.AngicGlobal.com Sales@AngicGlobal.com

Features:

■ Fixed and movable handle versions. ■ Various materials and handle lengths available. ■ Lightweight. ■ Mechanical advantage provides sufficient leverage to engage and disengage pin connectors and compress RFI gaskets. ■ Low cost versions available.



21L Series



40L Series

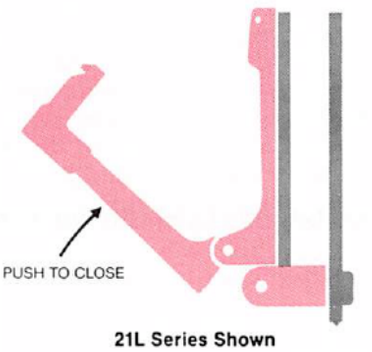

21L Series Shown

21L Series

Strength: 600 pounds ultimate; 400 pounds working.

Low Cost, Short Handle Version

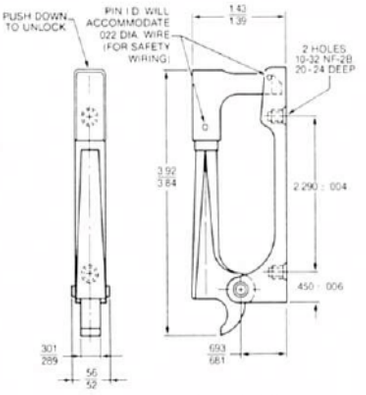

Locked Position

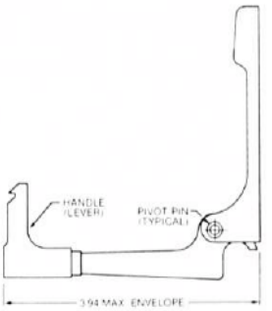

Unlocked Position

Low Cost, Long Handle Version

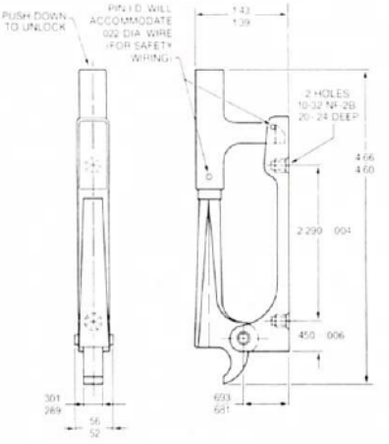

Locked Position

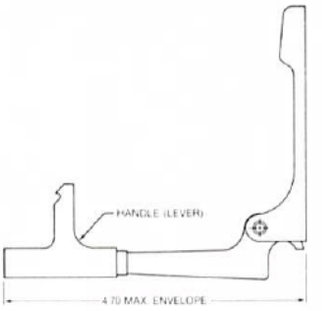

Unlocked Position

40L Series

Strength: 600 pounds ultimate; 400 pounds working.

Fixed Handle Version

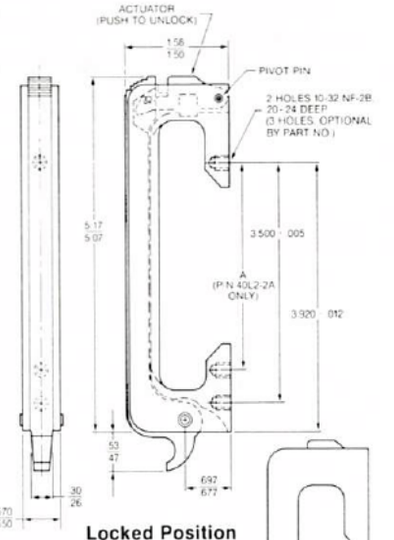

Locked Position

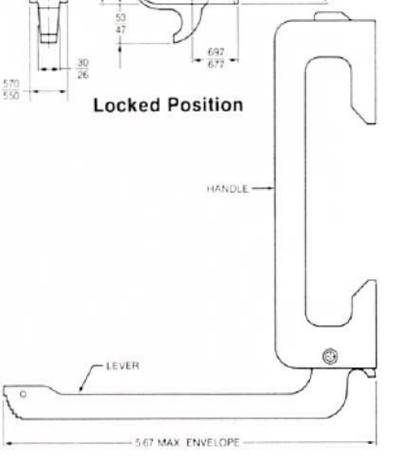

Unlocked Position

Get quote

Angic Global Solutions 1-888-872-0690
https://www.AngicGlobal.com Sales@AngicGlobal.com

Installation Reference - Typical

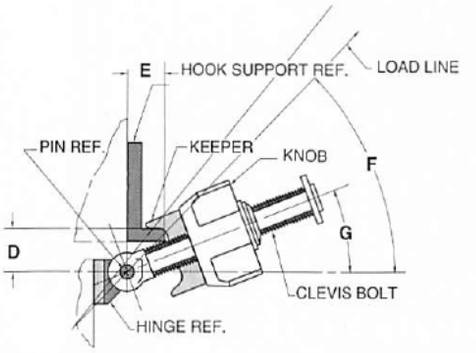

	Ultimate Load, lbs.	Weight, lbs.	A	B Min Grip	C DIA	Values Per Diagram Above				Part Number
						D	E	F	G	
	5500 (2,495)	0.16 (0.072)	–	–	–	0.904 (22.961)	0.904 (22.961)	45°	20°	**HD12006-101**
	5500 (2,495)	0.16 (0.072)	–	–	–	0.904 (22.961)	0.904 (22.961)	45°	20°	**HD12006-102**
	5500 (2,495)	0.16 (0.072)	–	–	–	0.904 (22.961)	0.904 (22.961)	45°	20°	**HD12006-103**

E

With Separate Hinges

Series	Dimensions	Material/ Finish
HD12026 	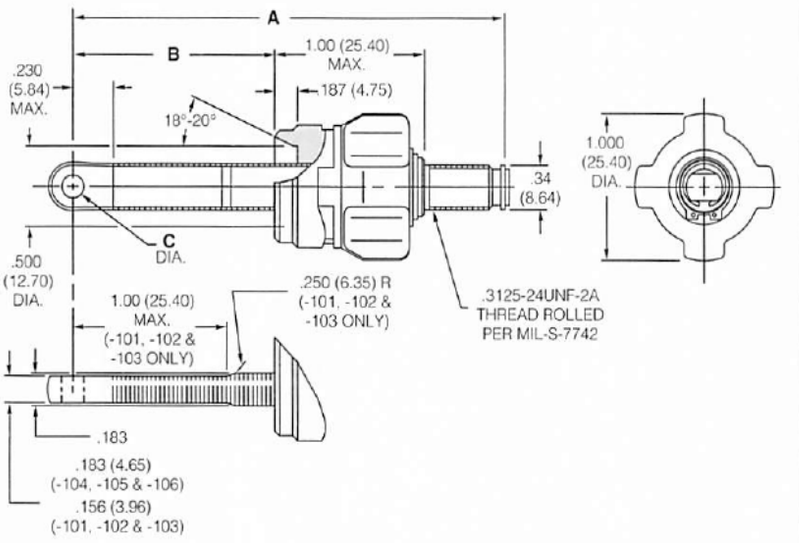 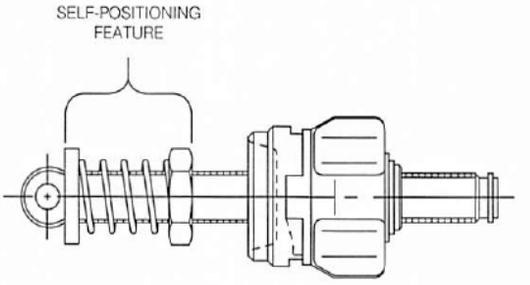	Knob: 2024-73511 Hard Anodize Clevis Bolt: 17-4PH CRES/ Passivate Nosepiece: 304 or 316 CRES/ Passivate or 15-5PH CRES/ Passivate Spring: 17-7PH CRES/ Passivate

Dimensions specified in inches (millimeters) and pounds (kilograms).
Note: Variables may not represent the same dimensions on all series numbers.

Get quote
Angic Global Solutions 1-888-872-0690
https://www.AngicGlobal.com Sales@AngicGlobal.com

Installation Reference - Typical

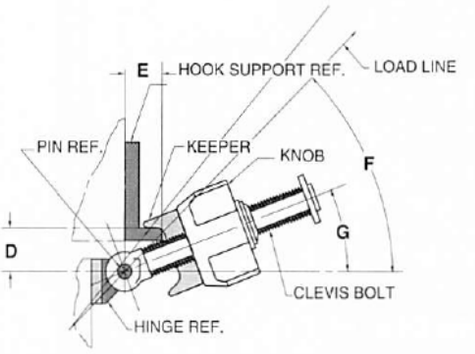

Ultimate Load, lbs.	Weight, lbs.	A	B Min Grip	C DIA	Values Per Diagram Above D	E	F	G	Part Number
1000 (454)	0.15 Max. (0.068)	2.03 (51.56)	1.000 (25.400)	0.128 (3.251)	0.418 ± 0.020 (10.617 ± 0.508)	0.418 ± 0.020 (10.617 ± 0.508)	45°	20°	**HD12026-101**
		2.41 (61.24)	1.375 (34.925)						**HD12026-102**
		2.91 (73.91)	1.875 (47.625)						**HD12026-103**
2000 (907)	0.15 Max. (0.068)	2.03 (51.56)	1.000 (25.400)	0.160 (40.64)					**HD12026-104**
		2.41 (61.24)	1.375 (34.925)						**HD12026-105**
		2.91 (73.91)	1.875 (47.625)						**HD12026-106**
1000 (454)	0.20 (0.09) Max.	2.03 (51.56)	1.000 (25.400)	0.128 (3.251)	0.418 ± 0.020 (10.617 ± 0.508)	0.418 ± 0.020 (10.617 ± 0.508)	45°	20°	**HD12026-101 CP**
		2.41 (61.24)	1.375 (34.925)						**HD12026-102 CP**
		2.91 (73.91)	1.875 (47.625)						**HD12026-103 CP**
2000 (907)	0.20 (0.09) Max.	2.03 (51.56)	1.000 (25.400)	0.160 (4.064)					**HD12026-104 CP**
		2.41 (61.24)	1.375 (34.925)						**HD12026-105 CP**
		2.91 (73.91)	1.875 (47.625)						**HD12026-106 CP**

E

With Separate Hinges

Series	Dimensions	Material/ Finish
HD12023 	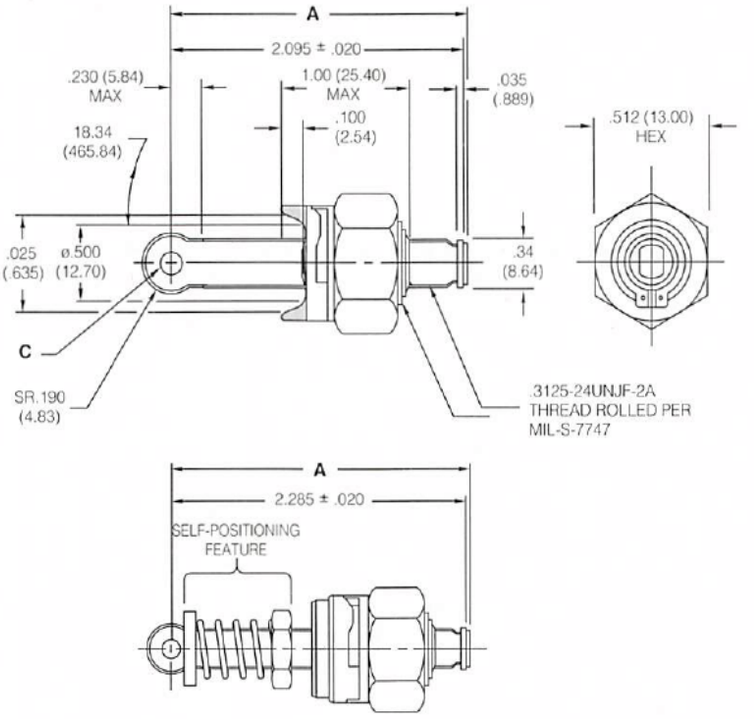	Knob: 416 CRES/ Passivate Clevis Bolt: 17-4PH CRES/Passivate Nosepiece: 15-5PH CRES/ Passivate Spring: 17-7PH CRES
HD12017 	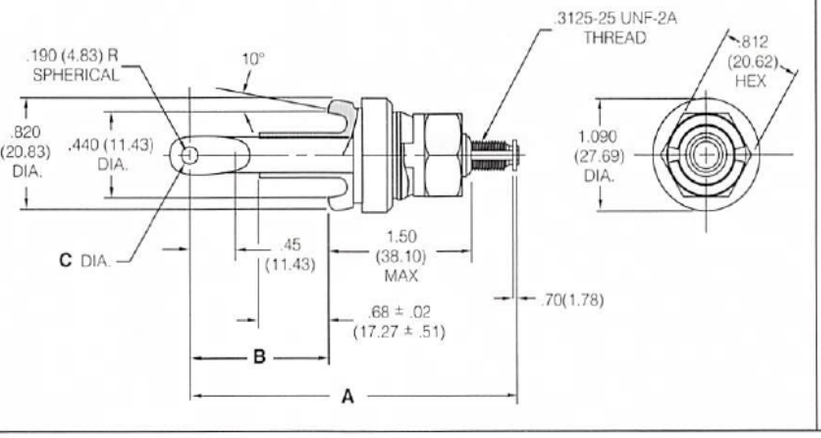	Knob: 416 CRES/ Passivate Clevis Bolt: PH 13-8 MO CRES/Passivate Nosepiece: 17-4 PH CRES/ Passivate

Dimensions specified in inches (millimeters) and pounds (kilograms).
Note: Variabl

Get quote
Angic Global Solutions 1-888-872-0690
https://www.AngicGlobal.com Sales@AngicGlobal.com

Installation Reference - Typical

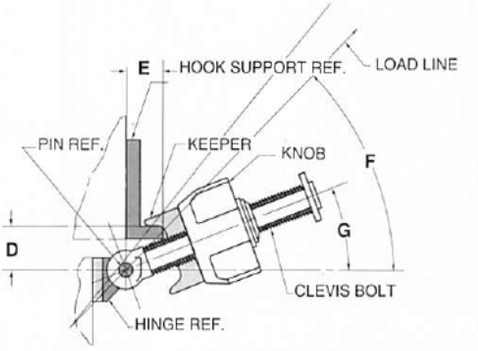

	Ultimate Load, lbs.	Weight, lbs.	A	B Min Grip	C DIA	Values Per Diagram Above				Part Number
						D	E	F	G	
	2000 (907)	0.17 (0.077)	2.130 (54.102)	–	0.160 / 0.163 (4.064 / 4.140)	0.418 ±. 0.020 10.617 ± 0.508	0.418 ±. 020 (10.617 ± 0.508)	45°	20°	**HD12023-101**
	2000 (907)	0.25 (0.113) Max.	2.320 (58.928)							**HD12023-102**
	3500 (1,588)	0.17 (0.077)	3.30 (83.82)	1.20 (30.48)	0.160 / 0.163 (4.064 / 4.140)	0.75 (19.05)	–	32.50°	15°	**HD12017-101**

E

Get quote
Angic Global Solutions 1-888-872-0690
https://www.AngicGlobal.com Sales@AngicGlobal.com

With Separate Hinges

Series	Dimensions	Material/ Finish
HD12031 	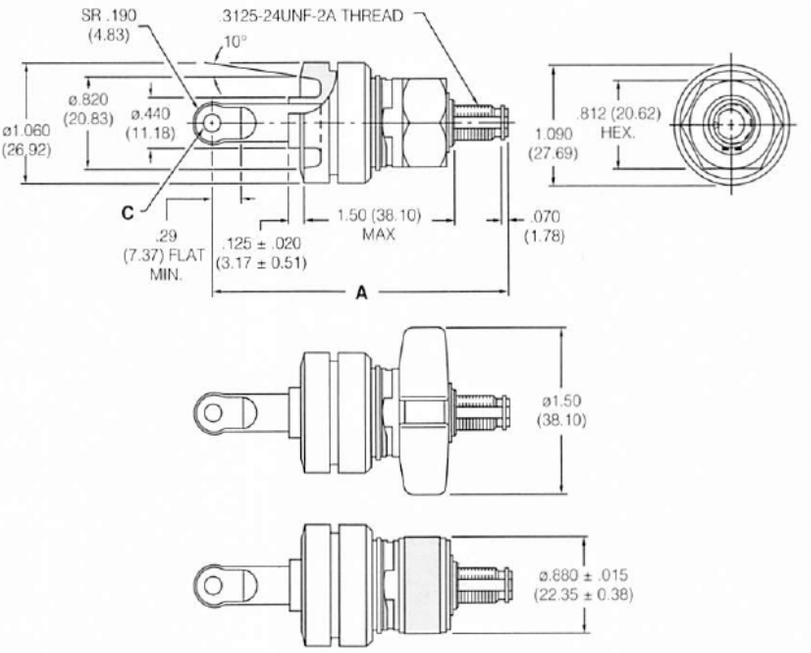	*Knob: 416 CRES/ Passivate Clevis Bolt: PH 13-8 MO CRES/Passivate Nosepiece: 17-4PH CRES/Passivate
		*Knob: A356-T6 Aluminum/Hard Anodize
		*Knob: 2024 Aluminum/Hard Anodize
HD12032 	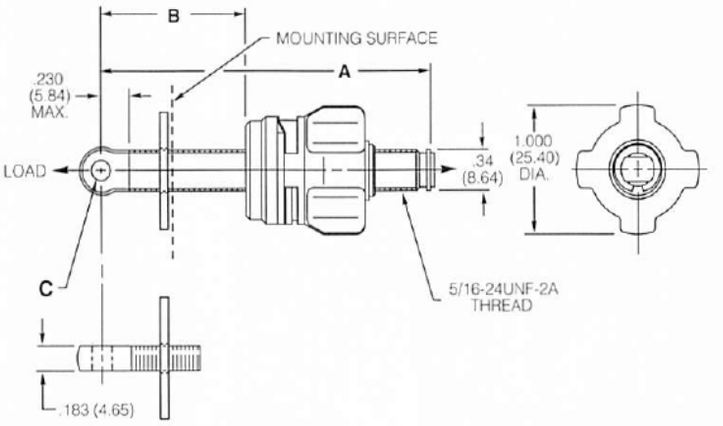	Knob: 2024-73511 2024-T4 Hard Anodize Clevis Bolt: 17-4PH CRES/Passivate Dry Film Lube Nosepiece: 304 or 316 CRES/Passivate or 15-5PH CRES/Passivate Dry Film Lube

Dimensions specified in inches (millimeters) and pounds (kilograms).
Note: Variables may not represent the same dimensions on all series numbers.

Get quote
Angic Global Solutions 1-888-872-0690
https://www.AngicGlobal.com Sales@AngicGlobal.com

Installation Reference - Typical

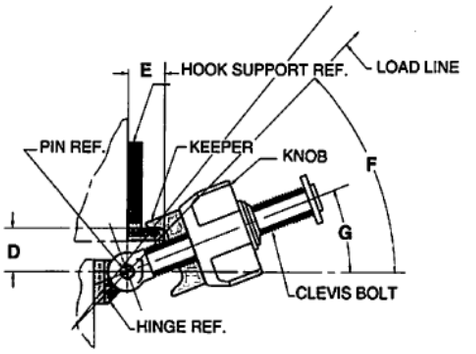

Ultimate Load, lbs.	Weight, lbs.	A	B Min Grip	C DIA	Values Per Diagram Above				Part Number
					D	E	F	G	
3500 (1,588)	0.16 (0.072)	2.80 (71.12)	–	0.160 / 0.163 (4.064 / 4.140)	0.658 (16.713)	0.658 (16.713)	45°	18°	**HD12031-101**
3500 (1,588)	0.16 (0.072)	2.8 (71.12)	–	0.160 / 0.163 (4.064 / 4.140)	0.658 (16.713)	0.658 (16.713)	45°	18°	**HD12031-102**
3500 (1,588)	0.16 (0.072)	2.80 (71.12)	–	0.160 / 0.163 (4.064 / 4.140)	0.658 (16.713)	0.658 (16.713)	45°	18°	**HD12031-103**
2000 (907)	0.20 (0.090) Max.	2.03 (51.56) 2.41 (61.24) 2.91 (73.91)	1.000 (25.400) 1.375 (34.925) 1.875 (47.625)	0.160 / 0.163 (4.064 / 4.140)	–	–	–	90°	**HD12023-104** **HD12023-105** **HD12023-106**

E

Get quote
Angic Global Solutions 1-888-872-0690
https://www.AngicGlobal.com Sales@AngicGlobal.com

With Integral Hinges

Series	Dimensions	Material/ Finish
CA12096 	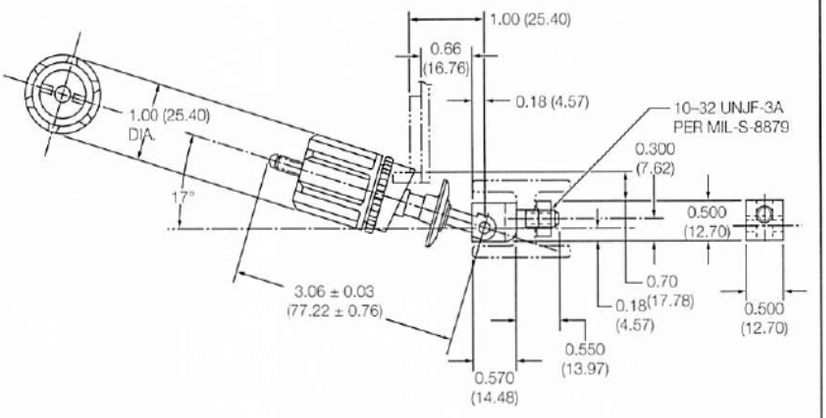	Sleeve: Glass Reinforced Polyester Resin Keeper and Extractor: Aluminum Alloy/ Anodize Hinge Base: Aluminum/ Anodize Center Shaft: CRES/Passivate or 4130 Alloy Steel/Cadmium Plated
CA12145 	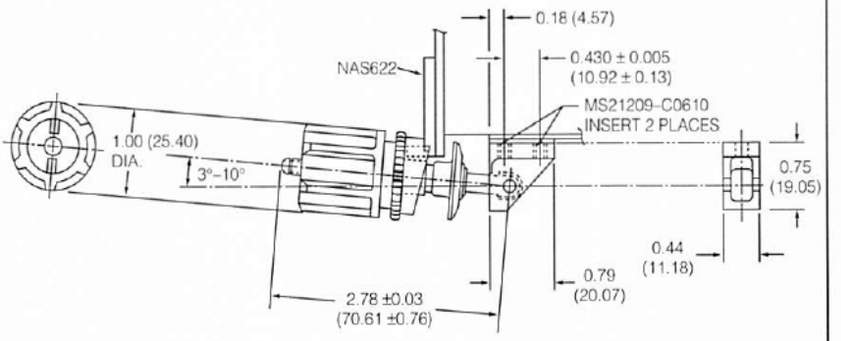	Sleeve: Glass Reinforced Polyester Resin Keeper, Extractor and Hinge Base: Aluminum Alloy/ Anodize Hinge Base: Aluminum/ Anodize Center Shaft: CRES/Passivate or 4130 Alloy Steel/Cadmium Plated

Dimensions specified in inches (millimeters) and pounds (kilograms).
Note: Variables may not represent the same dimensions on all series numbers.

Get quote
Angic Global Solutions 1-888-872-0690
https://www.AngicGlobal.com Sales@AngicGlobal.com

Load Diagram

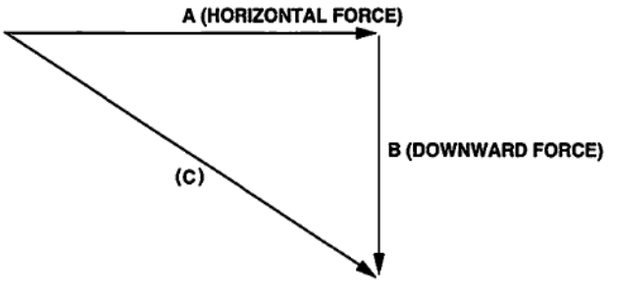

Ultimate Load, lbs.	Weight, lbs.	Clutch Load, lbs.	Values Per Diagram Above			Minimum Extraction	Part Number
			A	B	(C) Ref.		
500 (227)	0.15 (0.07) Max.	120 ± 20 (54 ± 9)	100 to 140 (45 to 64)	31 to 43 (14 to 20)	–	0.05 (12.70)	**CA12096-101**
500 (227)	0.13 (0.058) Max.	120 ± 20 (54 ± 9)	100 to 140 (45 to 64)	44 to 65 (20 to 30)	–	0.05 (12.70)	**CA12145-102**

E

Get quote
Angic Global Solutions 1-888-872-0690
https://www.AngicGlobal.com Sales@AngicGlobal.com

With Integral Hinges

Series	Dimensions	Material/ Finish
HD11097 	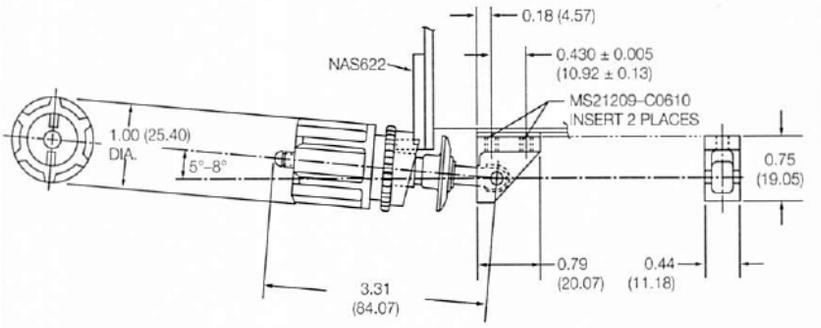	Sleeve: Glass Reinforced Polyester Resin Keeper, Extractor and Hinge Base: Aluminum/ Anodize Center Shaft: CRES/Passivated or 4130 Alloy Steel/Cadmium Plated
HD11098 	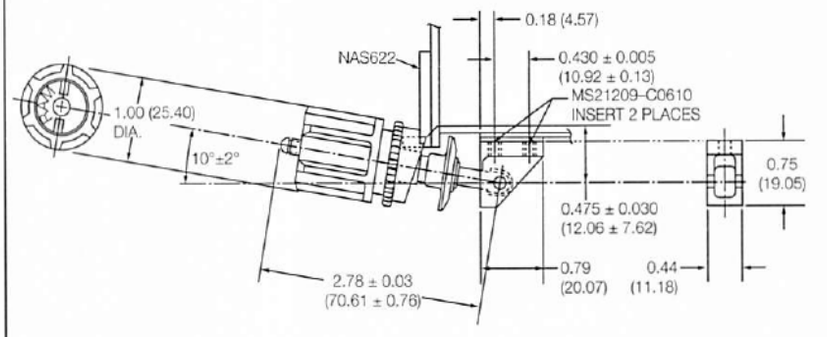	Sleeve: Glass Reinforced Polyester Resin Keeper, Extractor and Hinge Base: Aluminum/ Anodize Center Shaft: CRES/Passivated or 4130 Alloy Steel/Cadmium Plated

Dimensions specified in inches (millimeters) and pounds (kilograms).
Note: Variables may not represent the same dimensions on all series numbers.

Get quote
Angic Global Solutions 1-888-872-0690
https://www.AngicGlobal.com Sales@AngicGlobal.com

Load Diagram

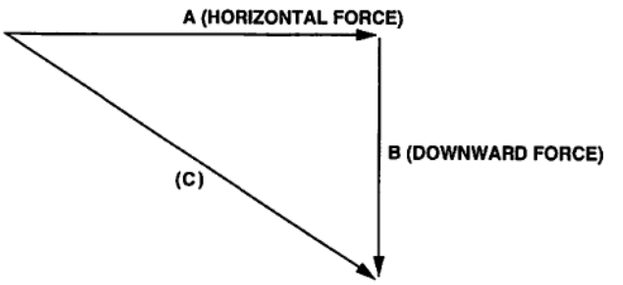

Ultimate Load, lbs.	Weight, lbs.	Clutch Load, lbs.	Values Per Diagram Above			Minimum Extraction	Part Number
			A	B	(C) Ref.		
500 (227)	0.13 (0.06) Max.	120 ± 20 (54 ± 9)	100 to 140 (45 to 64)	44 to 65 (20 to 29)	–	1.00 (25.40)	**HD-11097-101**
500 (227)	0.13 (0.06) Max.	150 ± 20 (68 ± 9)	130 to 170 (59 to 77)	71 to 93 (32 to 42)	–	0.05 (12.70)	**HD11098-101**

E

Get quote
Angic Global Solutions 1-888-872-0690
https://www.AngicGlobal.com Sales@AngicGlobal.com

With Separate Hinges

Series	Dimensions	Material/ Finish
HD11006 	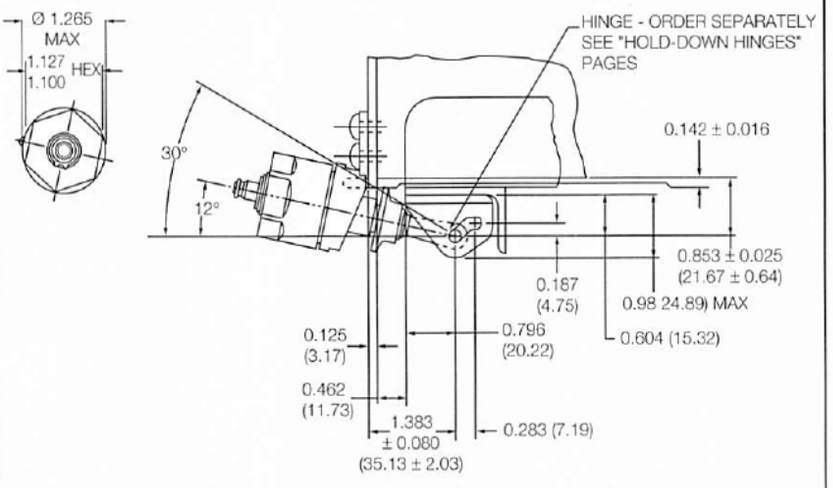 Note: See Hold-Down Hinges page.	Shaft: PH 13-8MO CRES/ Passivate Dry Film, Wet Lube Knob: A356-T6/ Hard Anodize Hook Connector: 17-4 PH CRES/Passivate Extractor: 7075-T6/Anodize

Dimensions specified in inches (millimeters) and pounds (kilograms).
Note: Variables may not represent the same dimensions on all series numbers.

Get quote
Angic Global Solutions 1-888-872-0690
https://www.AngicGlobal.com Sales@AngicGlobal.com

Load Diagram

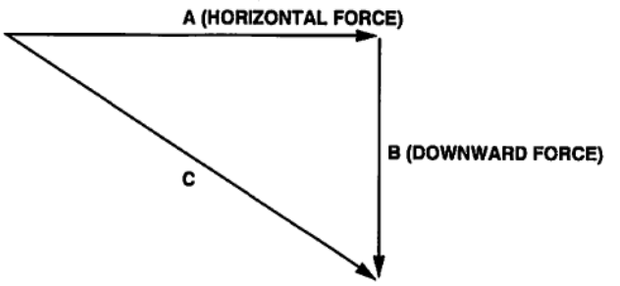

Ultimate Load, lbs.	Weight, lbs.	Clutch Load, lbs.	Values Per Diagram Above			Minimum Extraction	Part Number
			A	B	C		
2,000 (907)	0.42 (0.190) Max. With Hinge	150 (68)	150 (68) Min.	–	–	0.05 (12.70)	**HD11006-102**
		500 ± 50 (227 ± 23)	500 (227) Min.				**HD11006-103**

E

Dimensions	Material/ Finish	Weight, lbs.	Y	B	A	Part Number Hinge	Part Number Hinge Pin
For Hold-Down Series: **HD12026** **HD12023*** 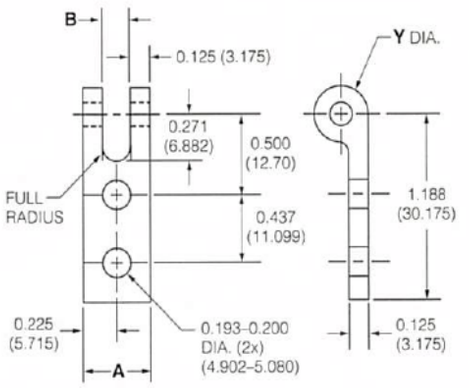	Alloy Steel/ Cadmium Plated	.025 (.011)	.130 (3.30)	0.197 (5.00)	0.450 (11.430)	**HD12026-115** **HD13002-101***	**HD12026-123**
				.312 (7.92)	0.566 (14.376)	**HD13019-101**	
			.162 (4.11)	.197 (5.00)	0.450 (11.430)	**HD12026-117** **HD13002-103***	
				.312 (7.92)	0.566 (14.376)	**HD13019-103**	
	CRES/ Passivate	.025 (.011)	.130 (3.30)	0.197 (5.00)	0.450 (11.430)	**HD12026-116** **HD13002-102***	**HD12026-124**
				.312 (7.92)	0.566 (14.376)	**HD13019-102***	
			.162 (4.11)	0.197 (5.00)	0.450 (11.430)	**HD12026-118** **HD13002-104***	
				.312 (7.92)	0.566 (14.376)	**HD13019-104***	
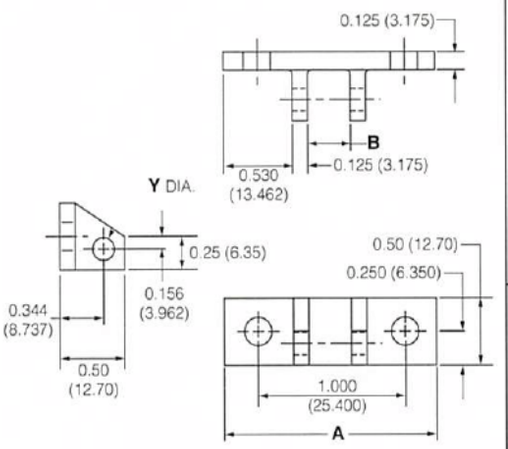 *Note for HD12023 Series Hold-Downs use Hinges: HD13002, HD13003, HD13019, or HD13020	Alloy Steel/ Cadmium Plated	.035 (.016)	.130 (3.30)	0.197 (5.00)	0.150 (35.10)	**HD12026-119** **HD13003-101***	**HD12026-123**
				.312 (7.92)	1.62 (41.148)	**HD13020-101***	
			.162 (4.11)	0.197 (5.00)	0.150 (35.10)	**HD12026-121** **HD13003-103***	
				.312 (7.92)	1.62 (41.148)	**HD13020-103**	
	CRES/ Passivate	.035 (.016)	.130 (3.30)	0.197 (5.00)	0.150 (35.10)	**HD12026-120** **HD13003-102***	**HD12026-124**
				.312 (7.92)	1.62 (41.148)	**HD13020-102**	
			.162 (4.11)	0.197 (5.00)	0.150 (35.10)	**HD12026-122** **HD13003-104***	
				.312 (7.92)	1.62 (41.148)	**HD13020-104**	
For Hold-Down Series: **HD12031** 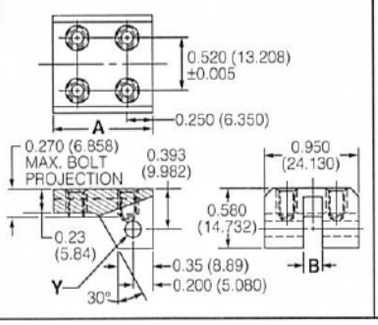	6061-T6 Aluminum Alloy/ Anodize	.060 (.027)	.162 (4.11)	.205 (5.207)	1.00 (25.40)	**HD13024-101**	**HD14005-101**

Dimensions specified in inches (millimeters) and pounds (kilograms).
Note: Variables may not represent the same dimensions on all series numbers.

ANGIC GLOBAL SOLUTIONS
Get quote
Angic Global Solutions 1-888-872-0690
https://www.AngicGlobal.com Sales@AngicGlobal.com

Hinge Dimensions	Material/ Finish	Weight, lbs.	Y	B	A	Part Number Hinge	Part Number Hinge Pin
For Hold-Down Series: HD11002 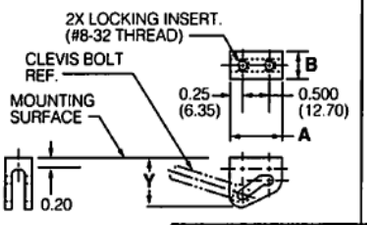	17-4PH Stainless Steel/ Passivate	.030 (.013) Max.	.90 (22.86)	0.50 (12.70)	1.00 (25.40)	**HD13008-101**	
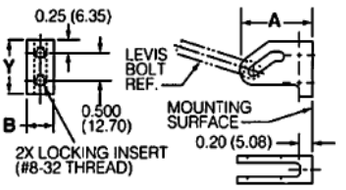	17-4PH Stainless Steel/ Passivate	.030 (.013) Max.	1.00 (25.40)	0.50 (12.70)	1.40 (35.56)	**HD13009-101**	
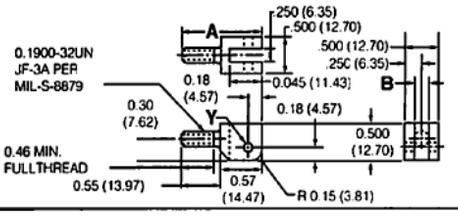	303 CRES/ Passivate	.030 (.013) Max.	0.128 (3.25) Dia.	.196 - 1.200 (4.98 - 5.08)	1.12 (28.45)	**CA12084-101**	
For Hold-Down Series: HD11003 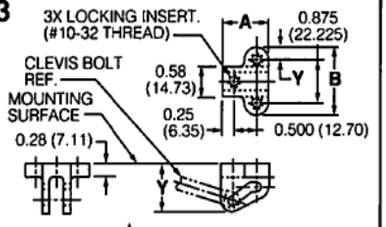	17-4PH Stainless Steel/ Passivate	.040 (.018) Max.	1.00 (25.40)	1.38 (35.05)	1.00 (25.45)	**HD13011-101**	
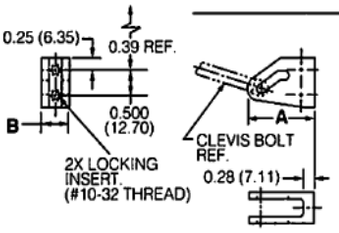	17-4PH Stainless Steel/ Passivate	.040 (.018) Max.	1.00 (25.40)	.58 (14.73)	1.40 (25.45)	**HD13012-101**	

For Hold-Down Series: HD11006	Material/ Finish	Weight, lbs.	A	B	C	D	Part Number Hinge	Part Number Hinge Pin
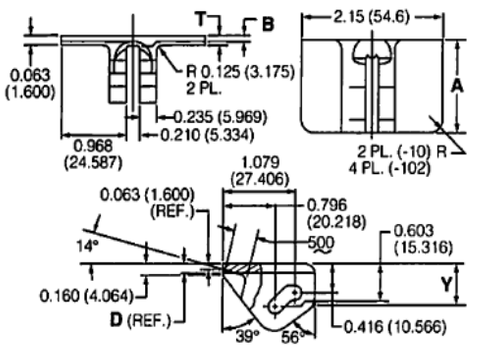	7050 - T.73511 Aluminum Alloy/ Anodize	.090 (.040) Max.	1.364 (34.64)	.125 (3.17)	0.163 (15.57)	.125 (3.17)	**HD13021-101**	**MS20392-2R Straight Pin and MS24665-1012 Cotter Pin**
			1.630 (41.40)	.160 (4.06)	0.434 (11.02)	.160 (4.06)	**HD13021-102**	

E

ANGIC Get quote

Angic Global Solutions 1-888-872-0690
https://www.AngicGlobal.com Sales@AngicGlobal.com

Selected Hold-Down Series	Hinge Dimension	Material/ Finish	Weight, lbs.	X Dia.	A	Hook Support Part Number
HD12023 **HD12026**	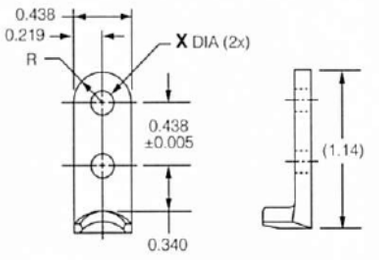	4140 Alloy Steel/ Cadmium Plated	.020 (.009)	.169 (4.429)	–	**HD13001-101** **HD13001-102**
		17-4 CRES/ Passivate	.020 (.009)	.195 (4.95)	–	**HD13001-103** **HD13001-104**
	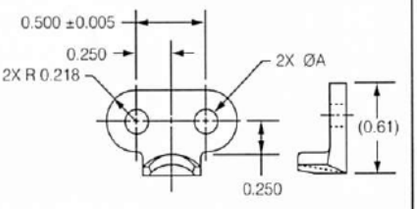	4140 Alloy Steel/ Cadmium Plated	.020 (.009)	.169 (4.29)	–	**HD13001-105** **HD13001-106**
		17-4 CRES/ Passivate	.020 (.009)	.195 (4.95)	–	**HD13001-107** **HD13001-108**
HD11002 **HD11003**	–	–	.020 (.009)	–	–	**MS14108***
CA12090 **CA12145** **HD11006** **HD11098**	–	–	.020 (.009)	–	–	**NAS622***
HD12031	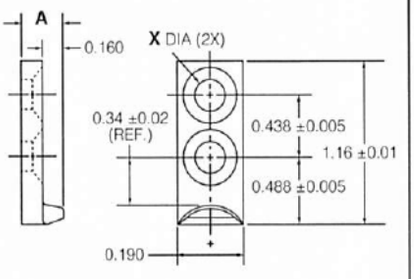	PH13-8MO CRES/ Passivate Heat Treat to 180,000 PSI Min.	.025 (.011)	0.211 (5.36) thru C'Sink 100° x 0.395	0.310 (7.87)	**HD13023-101**
		PH13-8MO CRES/ Passivate Heat Treat to 220,000 PSI Min.				**HD13023-102**
HD12006	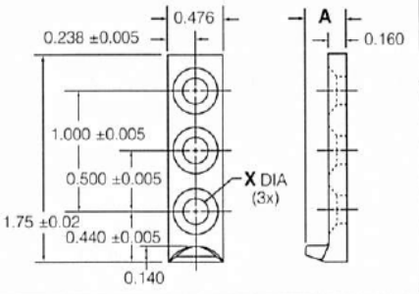	17-4 CRES/ Passivate	.032 (.014)	0.219 (5.56)	0.310 (7.87)	**HD13000-102**
		17-4 CRES/ Passivate A-286 Steel/ Passivate	.032 (.014)	0.219 (5.56)	0.360 (9.14)	**HD13000-101**
HD11000	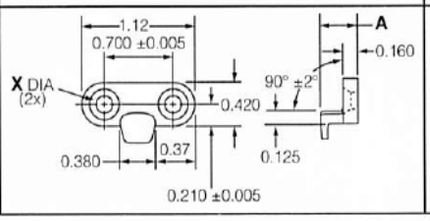	15-5PH CRES/ Passivate	.020 (.009)	0.156 (3.96)	0.380 (9.65)	**HD13006-101**

* Available at local distributor.

Dimensions specified in inches (millimeters) and pounds (kilograms).
Note: Variables may not represent the same dimensions on all series numbers.

Get quote

Angic Global Solutions 1-888-872-0690
https://www.AngicGlobal.com Sales@AngicGlobal.com

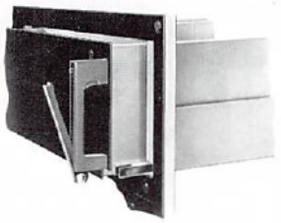

Camloc Chassis Latches offer a wide range of styles, strengths, materials and finishes. Included in this catalog are versions which meet requirements of NAS1637.

Most application requirements can be met by one of the many Camloc Chassis Latches shown in this catalog. However, the Camloc Products Division is geared to provide solutions to all types of special fastening problems. *If you don't see a design in this catalog that will suit your application, consult one of our field sales engineers for a solution to meet your specific needs.*

Typical fork assemblies:

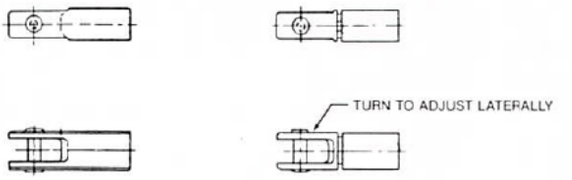

Non-adjustable Version
(Use shims at mounting point to compensate for grip variations.)

Adjustable Version
(Provides .250 max. mechanical adjustment.)

Basic Chassis Latch Components:

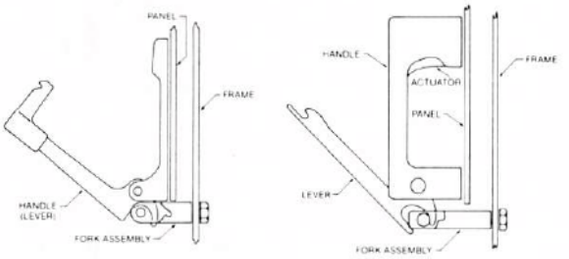

21L Series **40L/61L/72L Series (Typical)**

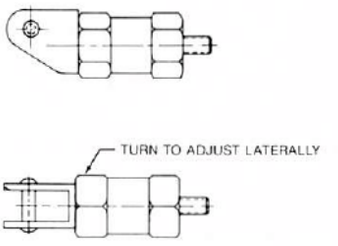

Self-compensating Version
(Provides .200 mechanical adjustment plus .192 self-compensating travel.)

Design and Features:

Camloc Chassis Latches secure removable electronic drawers as well as function as carrying handles. Each latch has a built-in lever (see above illustrations) which, when engaged with the fork assembly, provides a mechanical advantage with sufficient force to connect and disconnect electronic pin connectors, compress RFI gaskets, etc.

Mating fork assemblies come in non-adjustable, adjustable and self-compensating versions. Shims are available for non-adjustable versions to compensate for grip variations at installation. Other fork assemblies can be mechanically adjusted after installation or are self-adjusting.

E

Contents

Series Number	Page Number	Specifications					Features				
		Strength (lbs.)		Mechanical Advantage		Handle Carrying Load (lbs.)	Meets NAS1637	Adjustable Fork Assembly Available	Self-Compensating Fork Assembly Available	Various Handle Lengths Available	Safety Wire Hole Available
		Ultimate	Working	Disengagement Ratio	Engagement Ratio						
21L	E-30-E-33	600	400	8 to 1	6 to 1	200 Max.				●	●
40L	E-30-E-33			10 to 1	9 to 1						
61L	E-34-E-39	*	*	*	*	500 Max.	●	●	●	●	●
72L	E-40-E-43	2000	1333					●		●	●

**Varies by part number.*

● = Illustrated in catalog.

Get quote
Angic Global Solutions 1-888-872-0690
https://www.AngicGlobal.com Sales@AngicGlobal.com

Features:

■ Fixed and movable handle versions. ■ Various materials and handle lengths available. ■ Lightweight. ■ Mechanical advantage provides sufficient leverage to engage and disengage pin connectors and compress RFI gaskets. ■ Low cost versions available.



21L Series

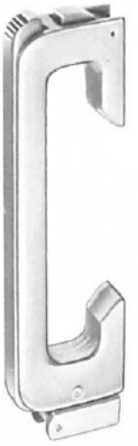

40L Series

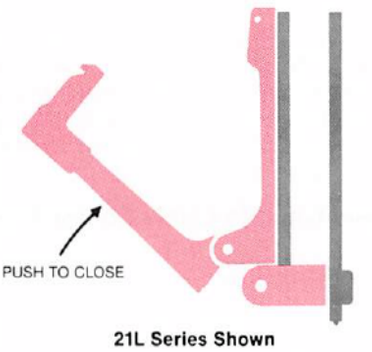

21L Series Shown

21L Series

Strength: 600 pounds ultimate; 400 pounds working.

Low Cost, Short Handle Version

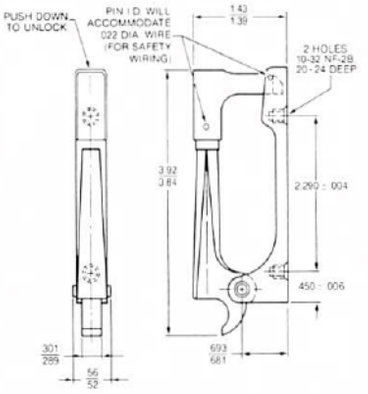

Locked Position

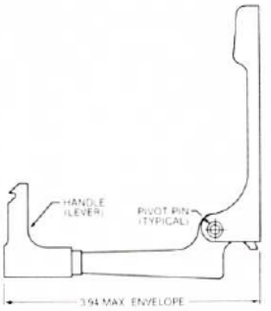

Unlocked Position

Low Cost, Long Handle Version

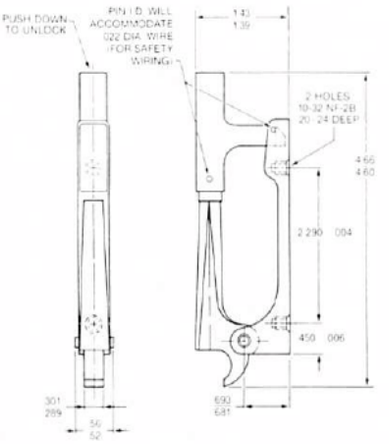

Locked Position

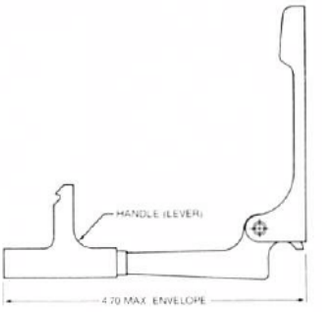

Unlocked Position

40L Series

Strength: 600 pounds ultimate; 400 pounds working.

Fixed Handle Version

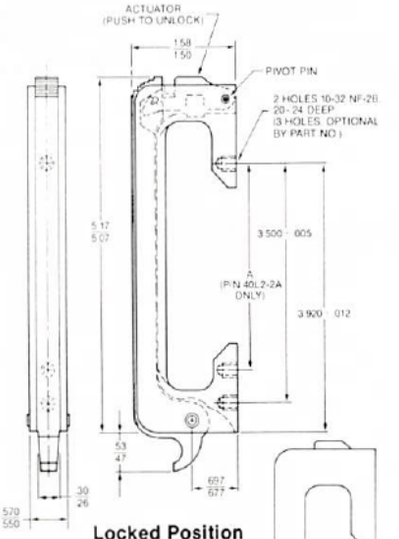

Locked Position

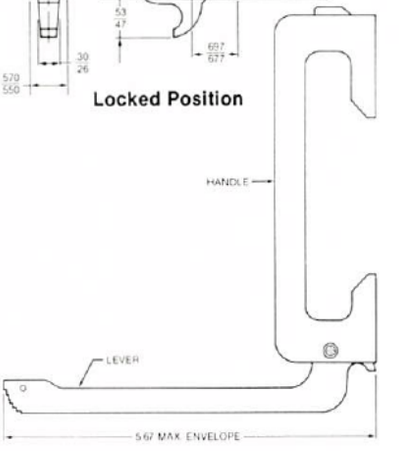

Unlocked Position

Get quote

Angic Global Solutions 1-888-872-0690
https://www.AngicGlobal.com Sales@AngicGlobal.com

Unlined. 7C1-4. 1/4" Nominal Clamp Size.

- Single Hole Mounting
- Passivated Stainless Steel
- Temperatures to 750°F.

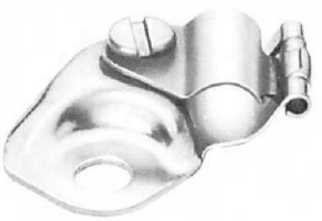

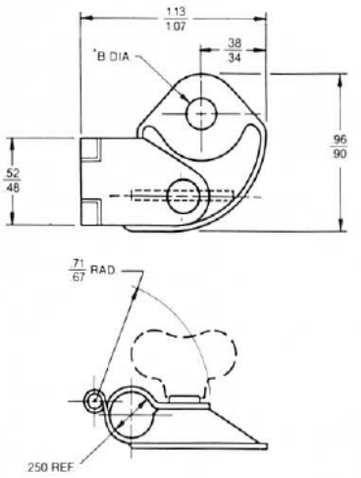

Head Styles:

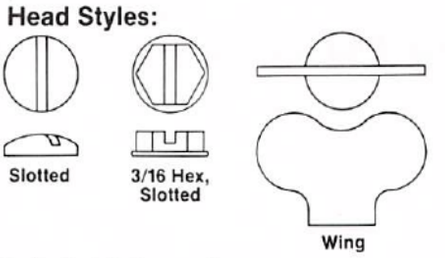

Ordering Information:

B Diameter	Head Style	Part No.	Weight (lbs.)
.198 / .191	Slotted	7C1-4	.0074
.134 / .128	Slotted	7C1-4A	.0074
.257 / .251	Slotted	7C1-4B	.0074
.198 / .191	3/16 Hex, Slotted	7C1-4H	.0074
.198 / .191	Wing	7C1-4W	.0101

7C31-1AA. 1/4" Nominal Clamp Size.

- Double Hole Mounting
- Passivated Stainless Steel
- Temperatures to 750°F.



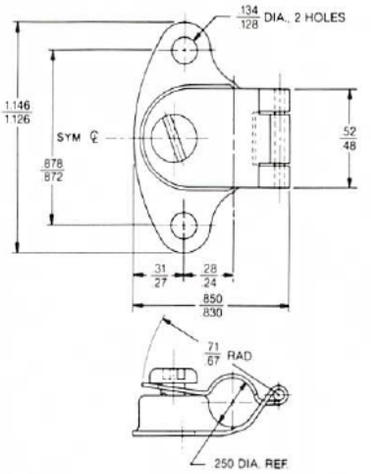

Head Style:

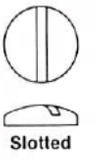

Ordering Information:

Head Style	Part No.	Weight (lbs.)
Slotted	7C31-1AA	.0074

F

7C1-6. 3/8" Nominal Clamp Size.

- Single Hole Mounting
- Passivated Stainless Steel
- Temperatures to 450°F.



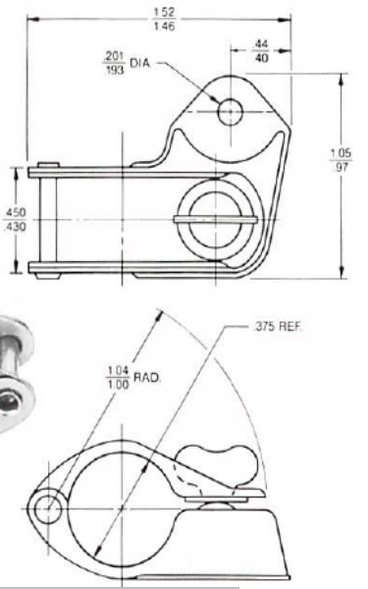

Head Styles:

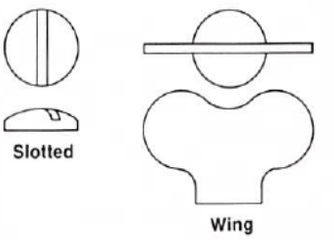

Ordering Information:

Head Style	Part No.	Weight (lbs.)
Slotted	7C1-6	.0241
Wing	7C1-6W	.0268

Get quote

Curved or Flat Surface Mounting. 7C61. .245" Nominal Clamp Size.

- Mounts on Curved or Flat Surfaces
- Passivated Stainless Steel
- Temperatures to 750°F.



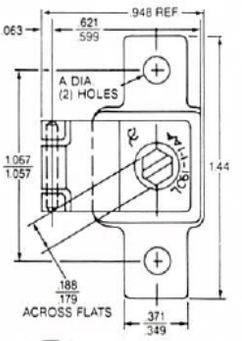

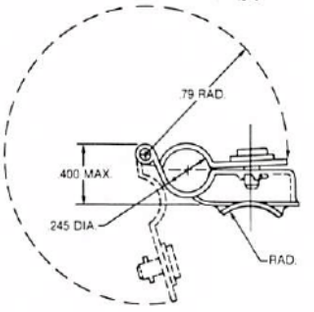

Ordering Information:

Mounting Flange	A Diameter	Part No.
Curved .230R	.146-.156	7C61-1-1AA
Curved .230R	None	7C61-1-2AA
Flat	None	7C61-2-2AA
Curved .18R	None	7C61-3-2AA
Flat	.146-.156	7C61-2-1AA

7C60. .245" x 2 Nominal Clamp Size.

- Dual, Quick-Access Clamp
- Mounts on Curved or Flat Surfaces
- Passivated Stainless Steel
- Temperatures to 750°F.

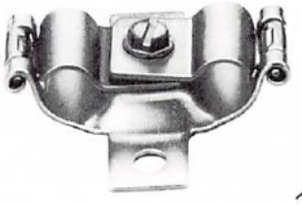

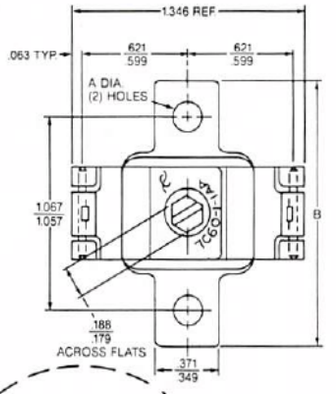

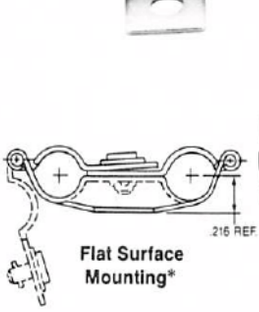

Flat Surface Mounting*

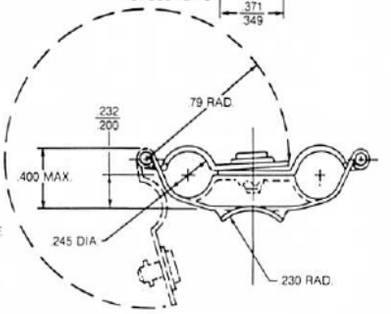

Curved Surface Mounting

*Dimensions same as Curved Surface Mounting except where indicated.

Ordering Information:

Mounting Flange	A Diameter	B Diameter	Part No.
Curved	.146-.156	1.39	7C60-1-1AA
Curved	.129-.139		7C60-1-2AA
Curved	None		7C60-1-3AA
Flat	None	1.44	7C60-2-3AA
Flat	.146-.156		7C60-2-1AA
Flat			

7C70. .245" x 2 Nominal Clamp Size.

- Dual, Quick-Access Clamp
- Short Mounting Tabs for Welding to Curved Surfaces
- Passivated Stainless Steel
- Temperatures to 750°F.



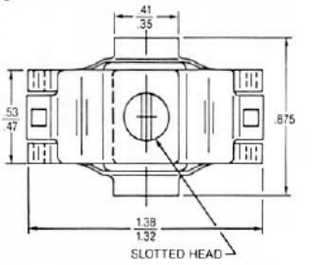

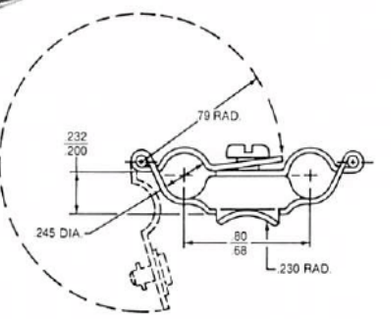

Ordering Information:

Mounting Flange	Part No.
Curved	7C70-4-1AA
Flat	7C70-4-2AA

Get quote
Angic Global Solutions 1-888-872-0690
https://www.AngicGlobal.com Sales@AngicGlobal.com

Neoprene Liners. 7C27-5. 5/16" Nominal Clamp Size.

- Neoprene Liner
- Single Mounting Hole
- Passivated Stainless Steel
- Temperatures to 212°F.



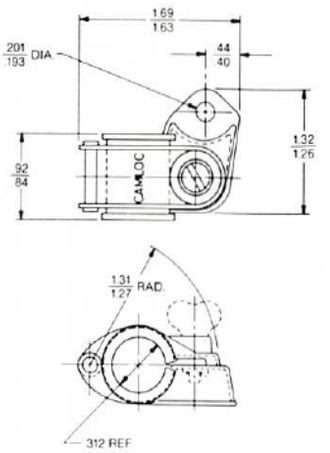

Head Styles:

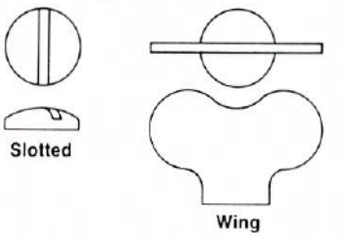

Ordering Information:

Head Style	Part No.	Weight (lbs.)
Slotted	7C27-5AA	.0402
Wing	7C27-5BA	.0429

7C27-*. 3/8" to 1-3/8" Nominal Clamp Size.

- Neoprene Liner
- Single Mounting Hole
- Passivated Stainless Steel
- Temperatures to 212°F.

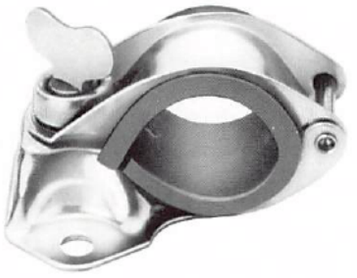

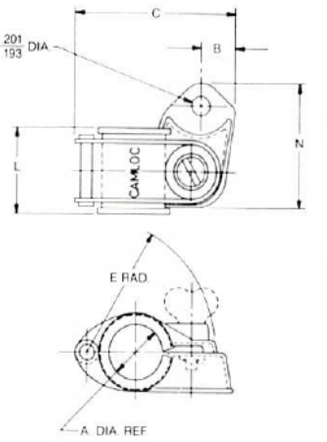

Head Styles:

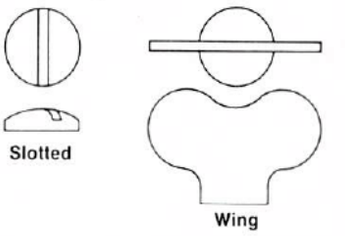

Ordering Information:

Head Style	Part No.
Slotted	7C27-*A
Wing	7C27-*BA

*Select dash number for clamp size from Selection & Dimension Table below.

F

Selection & Dimension Table

Nominal Clamp Size	*Dash No.	A Ref.	B ± .02	C ± .03	E ± .02	L ± .04	N ± .03	Weight (lbs.)	
								7C27-#AA	7C27-#BA
3/8	-6	.375	.42	1.66	1.29	.88	1.29	.0386	.0413
7/16	-7	.438	.42	1.80	1.56	.88	1.29	.0442	.0469
1/2	-8	.500	.42	1.80	1.56	.88	1.29	.0421	.0448
9/16	-9	.562	.42	1.95	1.56	.88	1.29	.0508	.0535
5/8	-10	.625	.42	1.95	1.56	.88	1.29	.0481	.0508
11/16	-11	.688	.42	2.01	1.74	.88	1.29	.0565	.0592
3/4	-12	.750	.42	2.01	1.74	.88	1.29	.0534	.0561
13/16	-13	.812	.46	2.18	1.89	.88	1.30	.0635	.0712
7/8	-14	.875	.46	2.18	1.89	.88	1.30	.0599	.0676
15/16	-15	.938	.47	2.29	2.03	.88	1.30	.0705	.0794
1	-16	1.000	.47	2.29	2.03	.88	1.30	.0665	.0754
1-1/16	-17	1.062	.50	2.46	2.18	.88	1.30	.0796	.0903
1-1/8	-18	1.125	.50	2.46	2.18	.88	1.30	.0751	.0858
1-3/16	-19	1.188	.52	2.57	2.32	.88	1.31	.0828	.0954
1-1/4	-20	1.250	.52	2.57	2.32	.88	1.31	.0778	.0904
1-5/16	-21	1.312	.52	2.71	2.47	.88	1.31	.0946	.1077
1-3/8					2.47				

Get quote
Angic Global Solutions 1-888-872-0690
https://www.AngicGlobal.com Sales@AngicGlobal.com

Stainless Steel Liners. 7C11-4. .08" Nominal Clamp Size.

- Stainless Steel Liner
- Single Hole Mounting
- Passivated Stainless Steel
- Temperatures to 750°F.



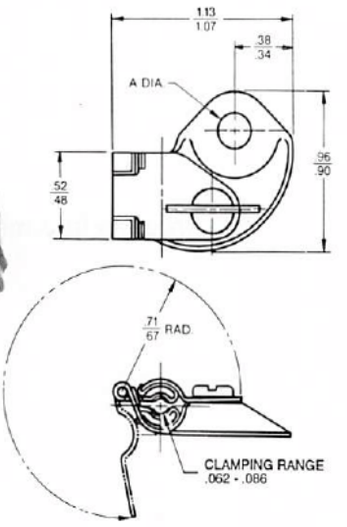

Head Styles:

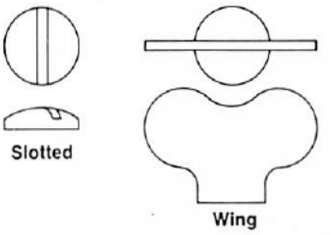

Ordering Information:

Head Style	Part No.	A Diameter	Weight (lbs.)
Slotted	7C11-4	.198 / .191	.0094
Slotted	7C11-4A	.134 / .128	.0094
Wing	7C11-4B	.198 / .191	.0121

7C41-1AA. .08" Nominal Clamp Size.

- Stainless Steel Liner
- Double Hole Mounting
- Passivated Stainless Steel
- Temperatures to 750°F.



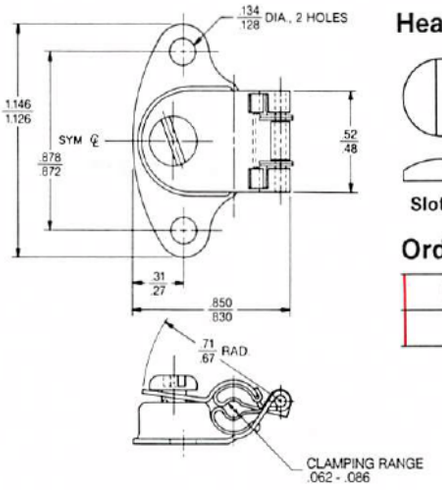

Head Style:

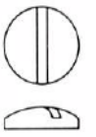

Ordering Information:

Head Style	Part No.	Weight (lbs.)
Slotted	7C41-1AA	.0087

Get quote

Angic Global Solutions 1-888-872-0690
https://www.AngicGlobal.com Sales@AngicGlobal.com

CONTENTS Page No.

Introduction.....G-1 - G-3
Selection Table.....G-3
PTSL01.....G-4
PTSL06.....G-5
PTCL38.....G-6
PTCL01.....G-7
PTCL02.....G-8
PTCL10.....G-9
PTCL25/PTCL28.....G-10
PTCL12/PTCL56/
PTCL59.....G-11
PTCL66/PTCL69.....G-12

Note: Custom designs, proprietary key codes, and master keying are available upon request.

key locks and key switches

When security and high quality are crucial, there are many Camloc® High Security Key Lock and Key Switch design features you can select to protect your data and possessions.

TUBULAR KEY

Tubular key systems provide greater security than conventional double-edged, flat keys because round, hollow keys have far more indent combinations, minimizing the potential for key duplication. With as few as seven tumbler pins, a tubular key lock or switch can accommodate more than 800,000 possible key combinations.

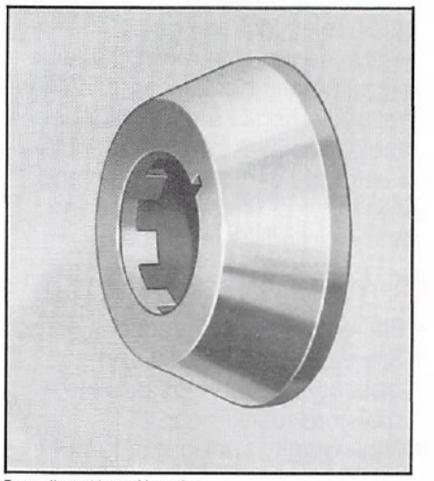

Castellated bezel interior

CASTELLATED DESIGN

A castellated design inside the bezel and around the upper collar spindle increases the difficulty of depressing the plungers and turning the spindle. As a result, successful tampering becomes nearly impossible.

GROOVELESS SPINDLE

The absence of a groove in the spindle discourages picking since a thief can no longer stabilize the spindle and sequentially push in plungers or tumblers to allow the spindle to rotate.

HARDENED STEEL SPINDLE AND HOUSING

A hardened steel spindle improves security by making it very difficult to drill out the center and trip the lock. Also, certain lock housings are available in hardened steel for added protection.

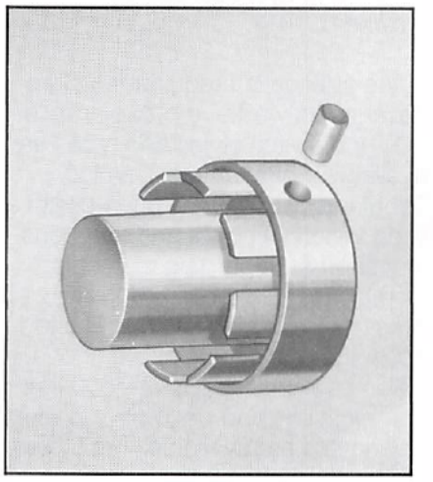

Notchless spindle, castellated upper collar, hardened steel pin.

G

Get quote
Angic Global Solutions 1-888-872-0690
https://www.AngicGlobal.com Sales@AngicGlobal.com

APPLICATIONS

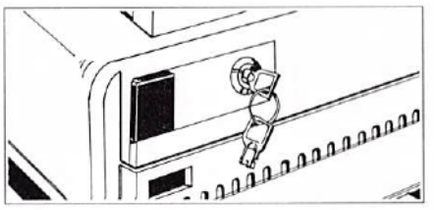

Some of the many uses of Camloc Key Locks: computers and peripheral equipment, terminals, vending machines, alarms, control boxes, electrical instruments, money receivers, garage doors, telephones, security systems, cash registers, medicine cabinets, communications scramblers, parking meters, utility meter locks, lockers, gas pump meters, desks, gun racks, ski racks, and automatic bank teller machines. These Key Locks are ideal for access panels, doors, drawers and enclosures made of metals, plastic and wood for electronics, industrial and commercial equipment.

QUALITY AND VERSATILITY

- Flat or tubular key versions
- Stainless steel bezels and optional dust shields provide moisture resistance.
- High quality spring and tumbler elements for smooth operation and high cycle life (30,000 cycles).

Since application requirements are never exactly alike, a broad array of lock and switch styles and types are available. For example, Camloc Tubular Key Locks are offered with a wide variety of pawls and four housing lengths. Regarding materials, Camloc Key Switches are available in brass or virgin zinc alloy die-casted housings with choice of bright or satin chrome finishes. Up to 800,000 key combinations and decorative plastic key covers are available. The following pages highlight the numerous varieties. However, if one of these standard units doesn't fit specific requirements, custom designs can be developed through discussions with our sales engineers who will be happy to help you.

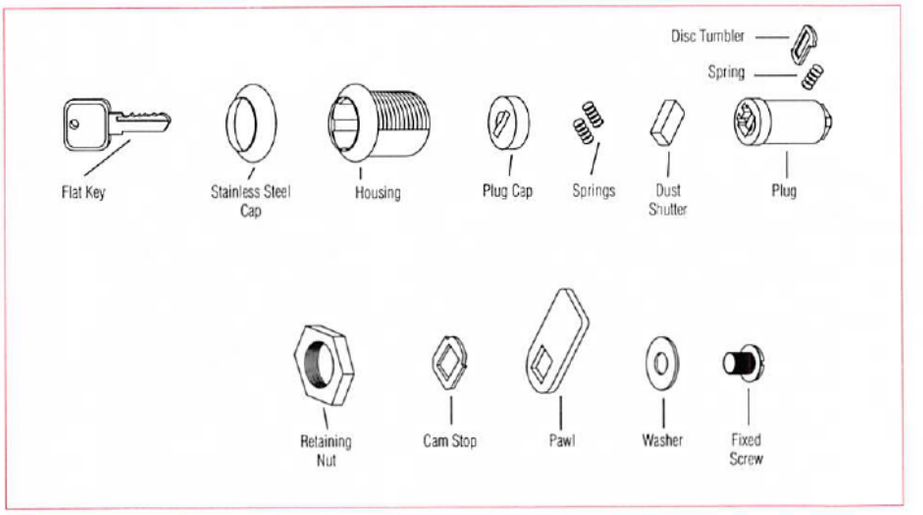

Design of typical Camloc flat key lock

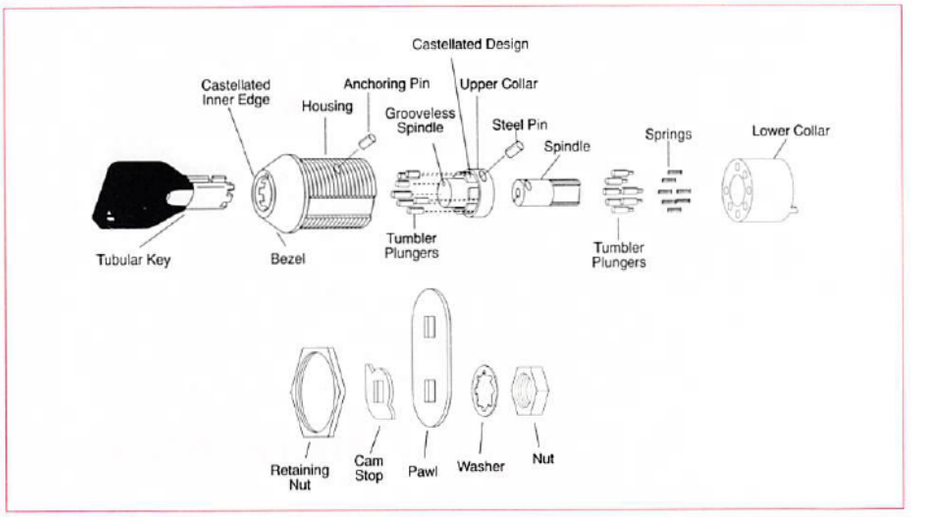

Design of typical Camloc high-security tubular key lock

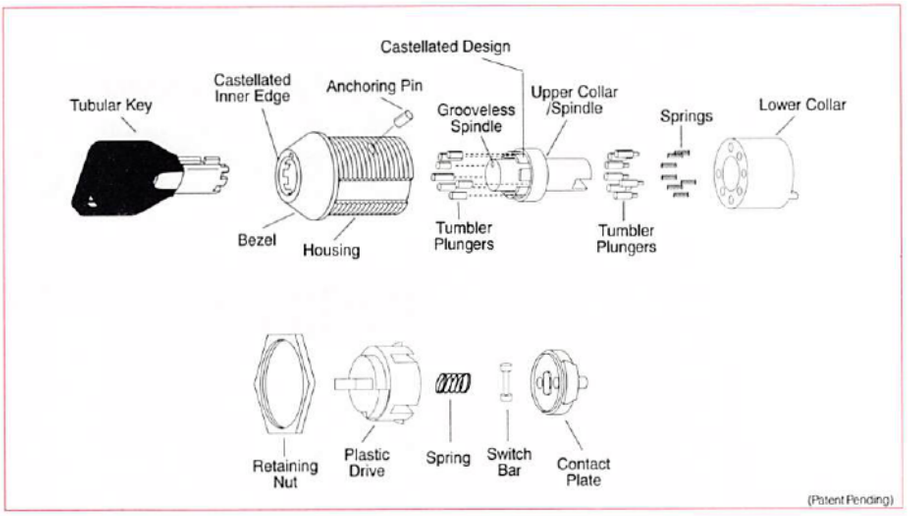

Design of typical Camloc key switch

Get quote

Angic Global Solutions 1-888-872-0690
https://www.AngicGlobal.com Sales@AngicGlobal.com

KEY OPTIONS

Camloc offers optional key retention for tubular key locks. The normal action of this type of lock is to lightly eject the key when turned 90°. The retention option holds the key in the lock until gently pulled.

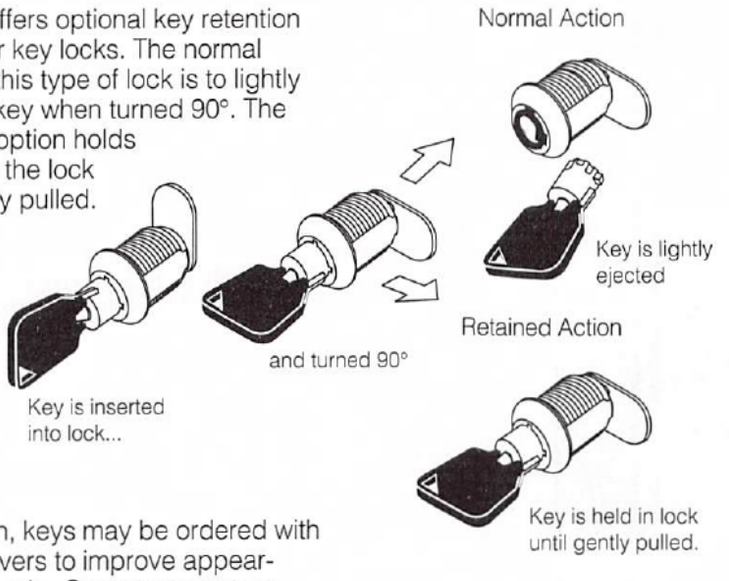

In addition, keys may be ordered with plastic covers to improve appearance and grip. Customer name or logo can be imprinted in the plastic or the standard Camloc logo is provided.

CAMLOC INNER CYLINDER LOCKS

For the many applications where a perfectly usable housing is available but a new tubular key cylinder lock is required to increase security or simply replace a worn lock, Camloc offers high security cylinder locks. When they are in the unlocked position, they are easily removed by depressing a spring bolt, allowing a quick change of the lock cylinder. These units are ideal for Tee handles commonly found in coin operated vending equipment.

KEY REPLACEMENT

Additional keys can be ordered or lost keys can be easily replaced by simply contacting Camloc headquarters with the part number taken from the lock or switch body, key code number stamped on the key or from the key tag, if provided. Be sure to describe key characteristics such as presence of a plastic cover, logo and original part number, if available.

CAMLOC KEY SWITCH AND KEY LOCK SELECTION TABLE

Consider the following:

- Size/space (diameter/length)
- Desired material (brass, zinc)
- Finish
- Mounting method (nut, clip)
- Key combinations
- Key pulls
- Operation direction (left, right)
- Assembled/unassembled
- Pawl style
- Key positions
- Security features (hardened steel pins, balls; castellations; number of tumblers)

Lock/Switch Part No.	High Security Version	Brass Material	Zinc Material	Number of Tumblers	Retaining Method	SwitchLock	Pawl Lock	Hollow Tubular Keys	*Distinguishing Feature
PTSL01		X	X	7	Nut	X (on-off)		X	Economical Security
PTSL06		X		4	Nut	X (on-off)		X	Key Pull Variety
PTCL38		X		4	Clip	X (on-off)	X		Combined Electrical and Mechanical Lock
PTCL01		X	X	7	Clip		X	X	Low Profile Pawl Lock
PTCL02	X	X	X	7	Nut		X	X	Most Common
PTCL10			X	4	Nut		X	X	Miniature
PTCL25			X	7	Self-retained		Springbolt	X	Inner Cylinder
PTCL28	X		X	7	Nut				
PTCL12			X	5	Nut		X		Stainless Steel Bezel with Dust Shutter
PTCL56			X	5	Nut				
PTCL59				5	Nut		X		
PTCL66		X		4	Nut			X	Miniature, Push Button Locks
PTCL69		X		4	Anchor Pin			X	

G

ANGIC GLOBAL SOLUTIONS Get quote
Angic Global Solutions 1-888-872-0690
https://www.AngicGlobal.com Sales@AngicGlobal.com

SEVEN PIN TUMBLERS, BRASS OR ZINC ALLOY DIE-CAST HOUSINGS

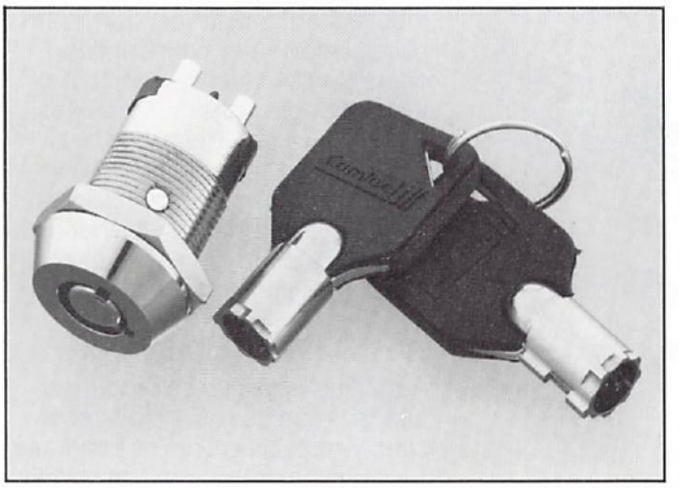

For most applications, the PTSL01 standard Camloc Tubular Key Switch provides an ideal balance between security requirements and cost limitations. The tubular key and seven pin tumblers provide more security than a conventional flat key switch and the zinc construction contributes to economy. A high security version is also available. It includes castellated design on the bezel interior and upper collar, notchless spindle with hardened steel ball and hardened steel pin in the collar. Both bright and satin chrome finishes are offered. Contacts and terminals are silver plated. A retaining nut provides for secure mounting.

Specifications:
Contact Rating: 4A 125 VAC, 2A 250VAC
Contact Resistance: 10 milliohms maximum
Insulation Resistance: 500 megohms minimum (500VDC)
Dielectric Strength: 1500 VAC-1 minute

How to Order Switch:
Part Number Structure

PTSL01 – 2 L 1 A A

Finish
A = Bright chrome plated
B = Satin chrome plated

Material
A = Zinc housing, no key cover
B = Brass housing, no key cover
P = Zinc housing, plastic key cover
R = Brass housing, plastic key cover

This -# is available for future variations

Operation Direction
L = Left-hand operation (counterclockwise) to "on" position
R = Right-hand operation (clockwise) to "on" position

Key Pull Positions
–1 = One key pull position
–2 = Two key pull positions

Basic Part Number

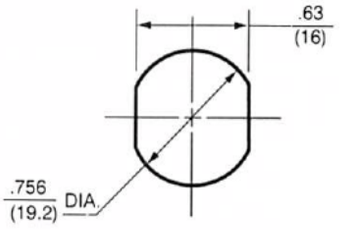

Installation Hole

Dimensions are expressed as follows: inch (millimeters) or inch (millimeters).

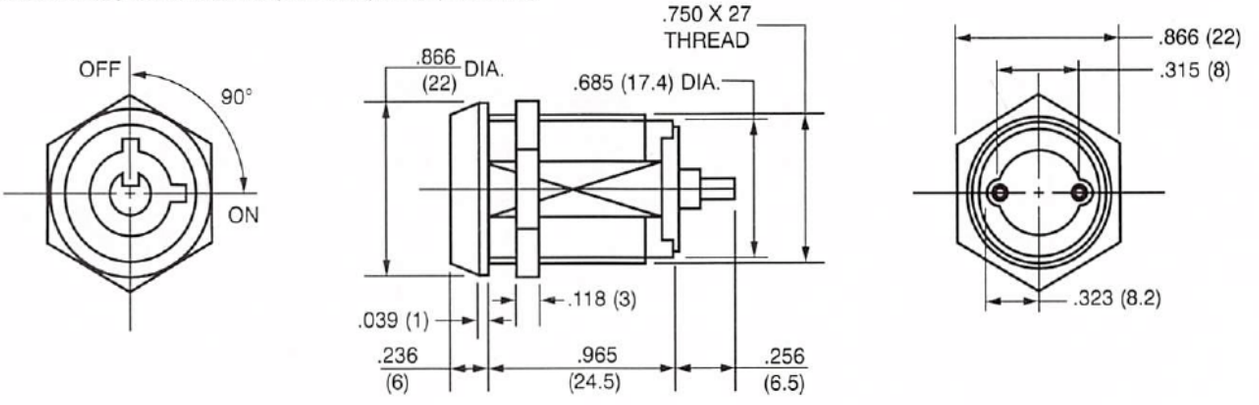

Get quote
Angic Global Solutions 1-888-872-0690
https://www.AngicGlobal.com Sales@AngicGlobal.com

MINIATURE TUBULAR KEY SWITCH PTSL06

KEY CAN BE REMOVED AT BOTH "ON" AND "OFF" POSITIONS

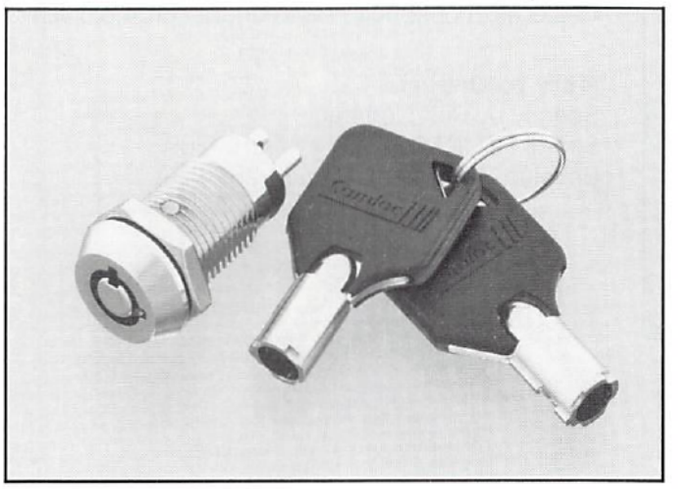

How to Order Switch:
Part Number Structure

PTSL06 – 2 L 1 B A

- **Finish**
  A = Bright chrome plated
  B = Satin chrome plated
- **Material**
  B = Brass housing, no plastic key cover
  R = Brass housing, plastic key cover
- This -# is available for future variations
- **Operation Direction**
  L = Left-hand operation (counterclockwise) to "on" position
  R = Right-hand operation (clockwise) to "on" position
- **Key Pull Positions**
  –1 = One key pull position
  –2 = Two key pull positions
- **Basic Part Number**

The PTSL06 Tubular Key Switch is ideal for use where limited space is available and high quality appearance and durable performance are desired. It incorporates a high life-cycle switch design. This model allows a choice of key removal at both "on" and "off" positions or only at "off." The brass housing and spindle are chrome plated. Stainless steel tubular key with wide range of key changes available. Four pin tumblers provide up to 200 key changes and seven pin tumbler units are available for applications requiring more than 800,000 key changes. A retaining nut provides for secure mounting.

Specifications:
Contact Rating: 2A 125 VAC, 1A 250VAC
Contact Resistance: 10 milliohms maximum
Insulation Resistance: 500 megohms minimum (500VDC)
Dielectric Strength: 1500 VAC-1 minute

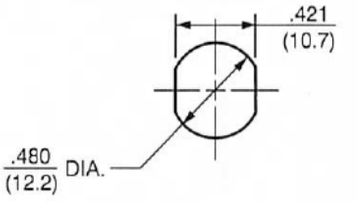

Installation Hole

G

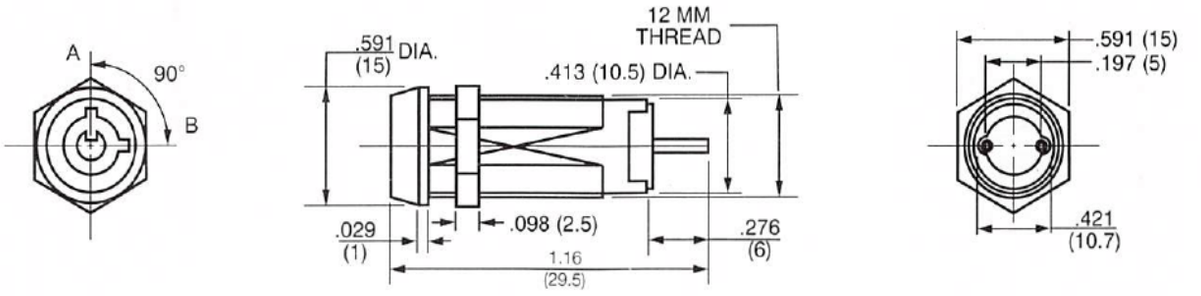

Dimensions are expressed as follows: inch (millimeters) or inch (millimeters).

ANGIC
Get quote
Angic Global Solutions 1-888-872-0690
https://www.AngicGlobal.com Sales@AngicGlobal.com

COMBINED MINI SWITCH/LOCK PTCL38

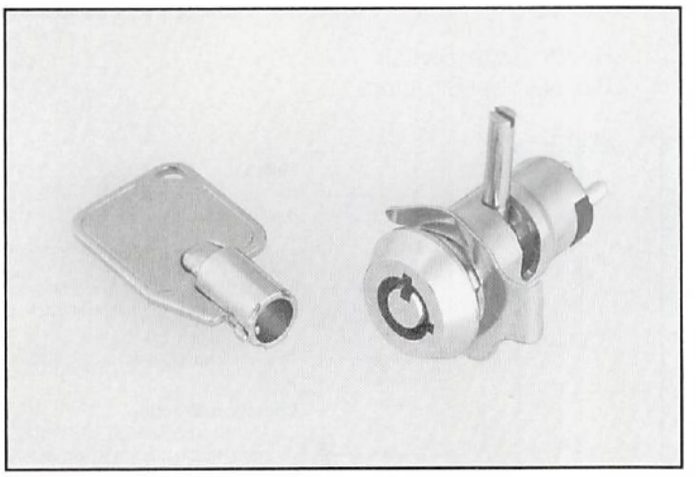

- 2 bezel styles – beveled or straight sides.
- Clip-on mounting.
- Key is gently retained in lock in either ON or OFF position, when removal isn't required.
- All brass construction with bright chrome finish.

How to Order:
Specify by Part Number
Straight Side Face: PTCL38-2R3-2BA
Beveled Side Face: PTCL38-2R2-2BA

The versatile PTCL38 combines mechanical locking capability with a high cycle-life, 2A switch. A removable pawl screws into and out of the lock body with a standard screwdriver to facilitate easy installation. Four-pin tumblers provide up to 200 key changes; seven-pin tumbler units are available for applications requiring more than 800,000 key changes.

Specifications:
Contact Rating: 4A 125VAC, 2A 250VAC
Contact Resistance: 10 milliohms maximum
Insulation Resistance: 500 megohms minimum (500VDC)
Dielectric Strength: 1500 VAC-1 minute

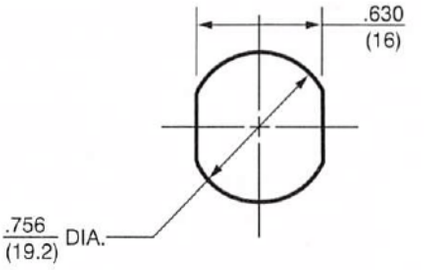

Installation Hole

Straight Side Face

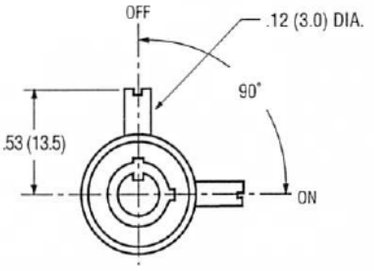

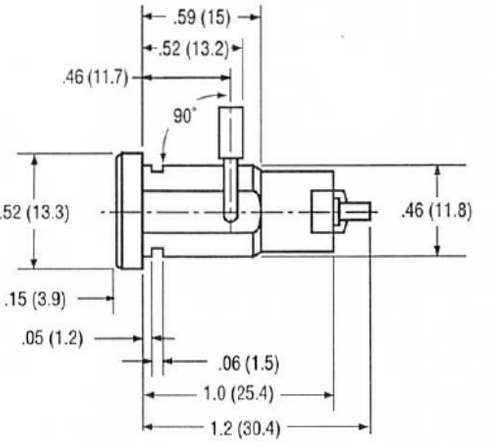

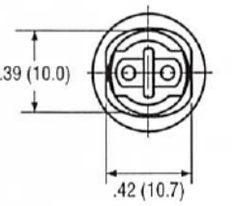

Beveled Side Face

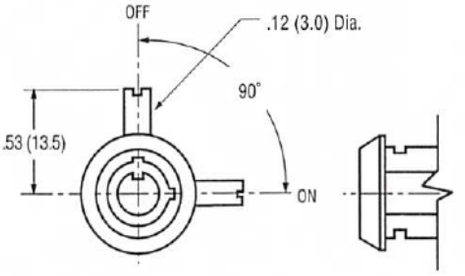

Dimensions are expressed as follows: (millimeters) or inch (millimeters).

Get quote

Angic Global Solutions 1-888-872-0690
https://www.AngicGlobal.com Sales@AngicGlobal.com

CLIP RETAINED MOUNTING FOR HAND INSTALLATION

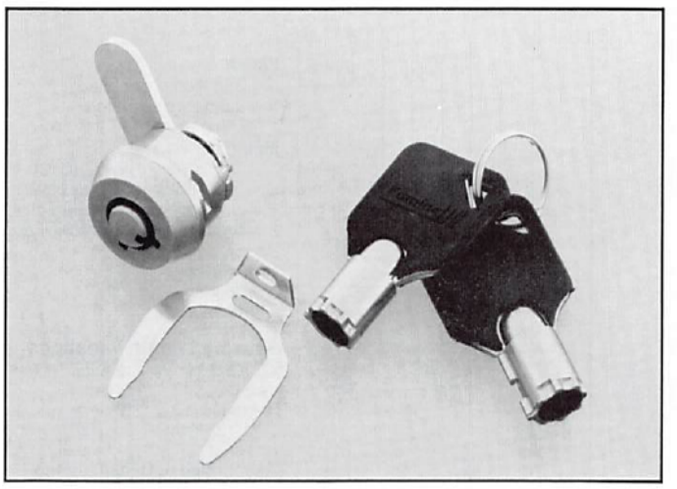

Clip retained tubular key lock with seven pin tumblers allows for more than 800,000 key changes. Distance from the back of the bezel to the grooves can be specified by the customer. Two key-pull design is standard, unless otherwise specified. Chrome plated zinc alloy housing is standard; brass housing is optional. There are many pawls to choose from. The Camloc Products Division will help custom-design a pawl upon request.

How to Order Lock:
Part Number Structure

PTCL01 -2 R 2 S 4 A A

Finish
A = Bright chrome plated
B = Satin chrome plated

Material
A = Zinc housing, no key cover
B = Brass housing, no key cover
P = Zinc housing, plastic key cover
R = Brass housing, plastic key cover

Pawl Variations
0 = No pawl
1 = Pawl per detail A

Spring Clip Grip
S = .090 spring clip grip
L = .160 spring clip grip

Pawl Assembly
1 = Pawl assembled to lock
2 = Pawl unassembled

Operation Direction
L = Left-hand operation (counterclockwise) to unlock
R = Right-hand operation (clockwise) to unlock

Key Pull Positions
-1 = One key pull position
-2 = Two key pull positions

Basic Part Number

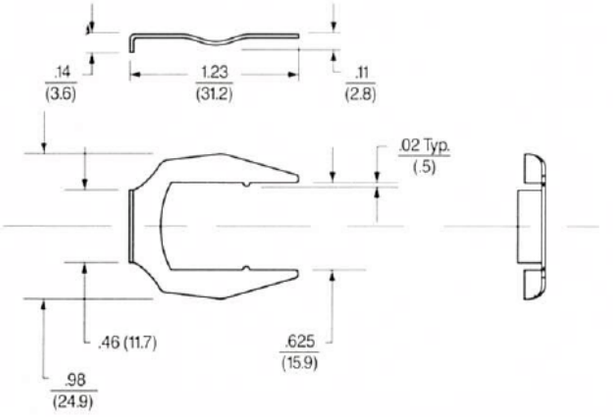

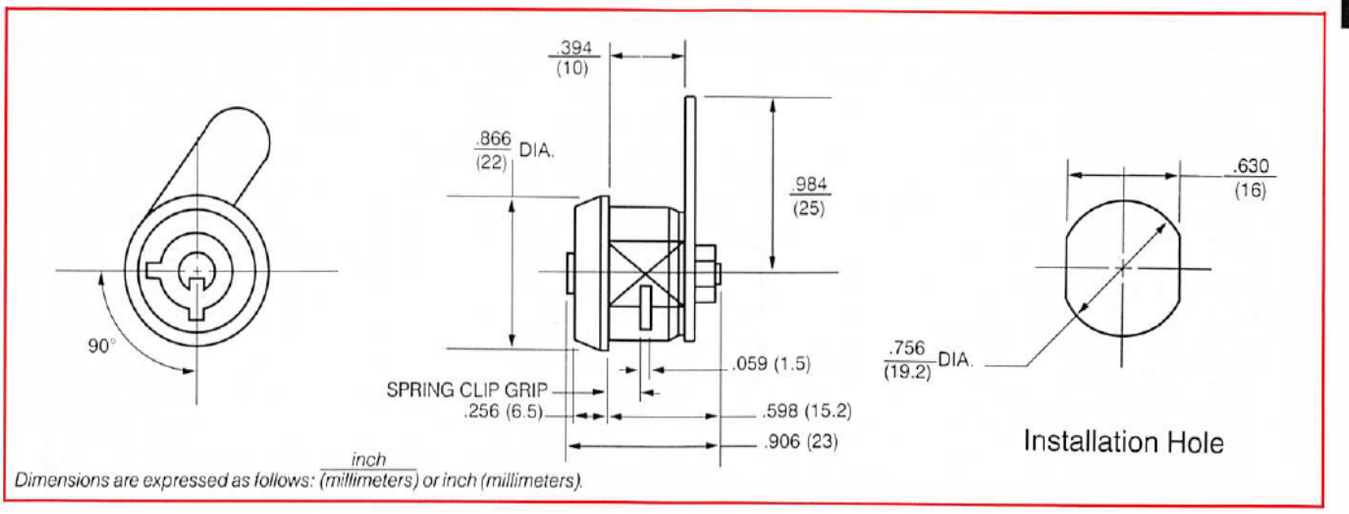

G

Get quote
Angic Global Solutions 1-888-872-0690
https://www.AngicGlobal.com Sales@AngicGlobal.com

HIGH QUALITY TUBULAR KEY LOCK PTCL02

NUT RETAINED, ZINC OR BRASS HOUSING

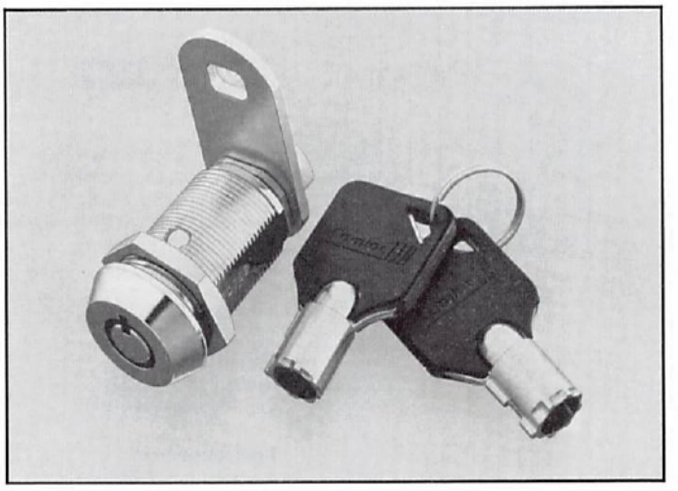

High quality PTCL02 model is the most commonly used lock for a broad range of applications. Aesthetically pleasing appearance contributes to attractiveness. Choice of finishes includes bright chrome or satin chrome. Seven pin tumbler design provides for more than 800,000 key combinations. Housings are constructed of zinc or brass. There is a wide choice of key combinations from all keyed alike to all keyed differently. Also, PTCL02 locks can be ordered with master keying option to allow owners access to rented space. Available in extra small, small, medium and large lengths. There is a wide variety of pawls to choose from. The Camloc Products Division will help custom-design a pawl if needed. A retaining nut provides for secure mounting.

How to Order Lock:
Part Number Structure

PTCL02 – 2 R 2 X 1 A B

Finish
A = Bright chrome plated
B = Satin chrome plated

Material
A = Zinc housing, no key cover
B = Brass housing, no key cover
P = Zinc housing, plastic key cover
R = Brass housing, plastic key cover

Pawl Variations
0 = No pawl
1 Pawl

Housing Length Variations

X = 0.472 inch	12.5mm
S = .690 inch	17.5mm
M = 0.906 inch	22.5mm
L = 1.102 inches	28.5mm

Assembled or Unassembled
1 = Pawl assembled to lock
2 = Pawl unassembled (packaged separately)

Operation Direction
L = Left-hand operation (counterclockwise) to unlock
R = Right-hand operation (clockwise) to unlock

Key Pull Positions
-1 = One key pull position
-2 = Two key pull positions
-3 = Three key pull positins

Basic Part Number

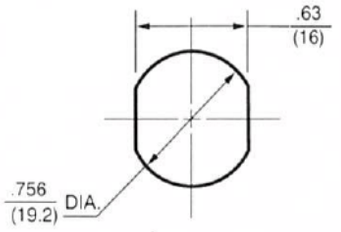

Installation Hole

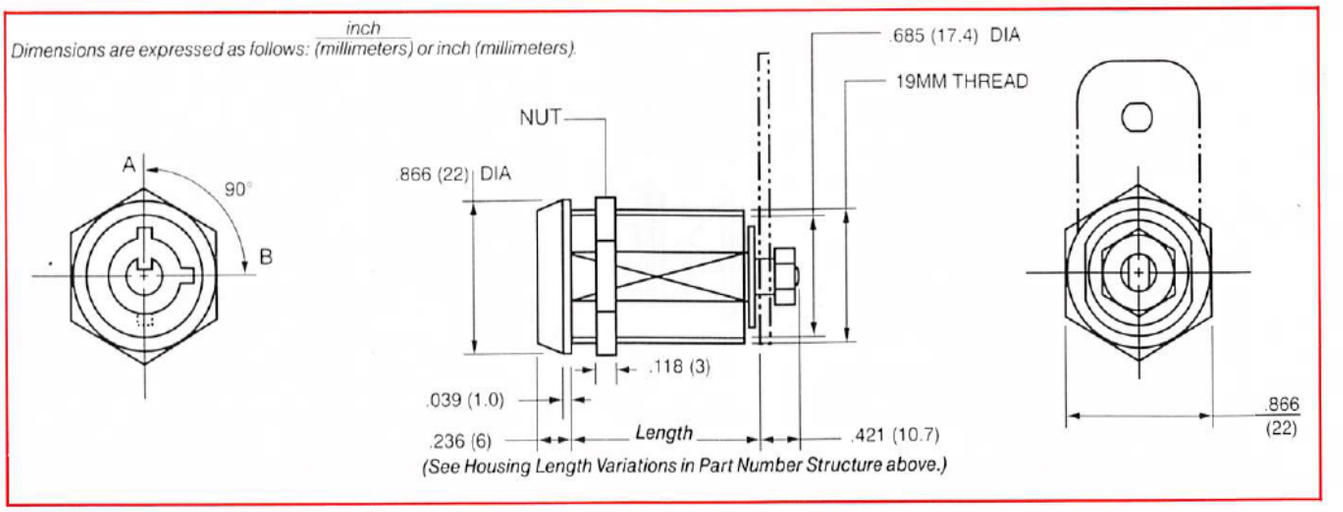

Get quote

Angic Global Solutions 1-888-872-0690
https://www.AngicGlobal.com Sales@AngicGlobal.com

NUT RETAINED DESIGN

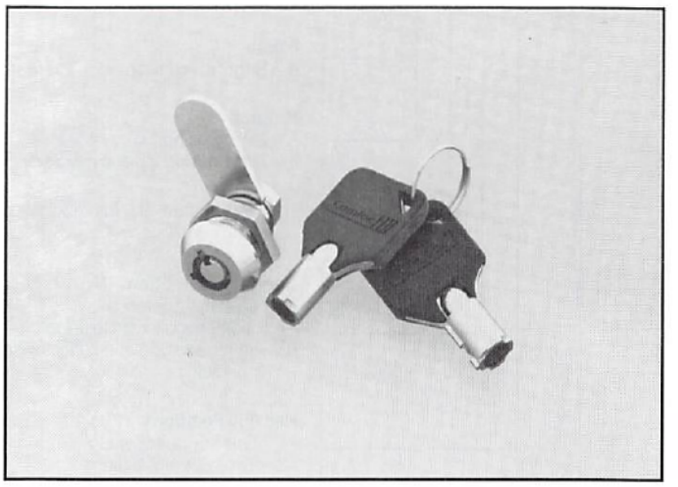

Housing is available in brass or zinc. Small size makes this tubular key lock ideal for electronics and high technology office equipment where space is limited. It is available in bright or satin chrome finish on the bezel and spindle face. The key may be removed in either of two positions. Specify standard four-pin tumbler design for more than 200 key changes or seven-pin design for more than 800,000 key changes. The two key-pull design is standard unless otherwise specified. (Please ask the Camloc Products Division for assistance if special pawl designs are required. A retaining nut provides for secure mounting. Clip-mount version available on request.

How to Order Lock:
Part Number Structure

PTCL10 – 2 L 2 – 1 A A

Finish
A = Bright chrome plated
B = Satin chrome plated

Material
A = Zinc housing, no key cover
B = Brass housing, no key cover
P = Zinc housing, plastic key cover
R = Brass housing, plastic key cover

Pawl Variations
0 = No pawl
-1 = Pawl

Assembled or Unassembled
1 = Pawl assembled to lock
2 = Pawl unassembled (packaged separately

Operation Direction
L = Left-hand operation (counterclockwise) to unlock
R = Right-hand operation (clockwise) to unlock

Key Pull Positions
-1 = One key pull position
-2 = Two key pull positions
-3 = Three key pull positions

Basic Part Number

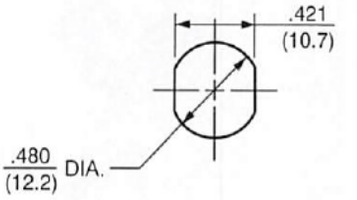

Installation Hole

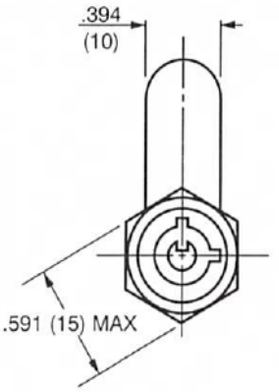

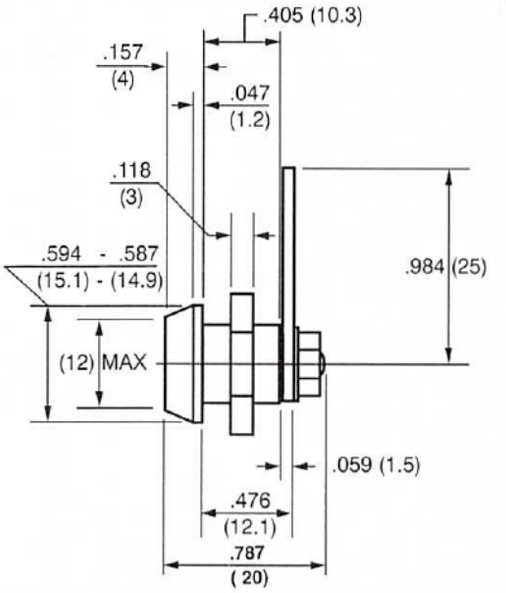

Dimensions are expressed as follows: inch (millimeters) or inch (millimeters).

G

Get quote
Angic Global Solutions 1-888-872-0690
https://www.AngicGlobal.com Sales@AngicGlobal.com

IDEAL FOR T-HANDLE APPLICATIONS

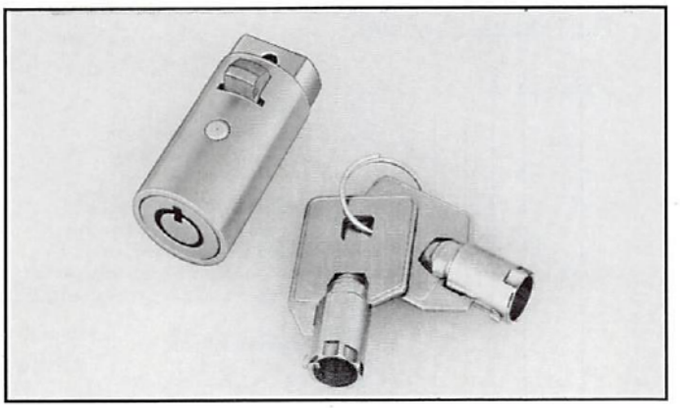

The PTCL25 lock allows for replacement of a lock cylinder with a new tumbler combination in the field in seconds by using simple procedures. When a new combination is desired, removal is achieved by depressing a bolt in the unlocked position. Solid brass bolt and inner mechanism are standard. The die cast zinc outer barrel is chrome plated. The flush face design eliminates bezel protrusion. The PTCL25 lock incorporates a self-retained mounting design.

How to Order - PTCL25
Part Number Structure:

PTCL25 –1 L 1 A A

Finish
A = Bright chrome plated

Material
A = Zinc housing, no key cover
P = Zinc housing, plastic key cover

This -# is available for future variations, stamping code

Operation Direction
L = Left-hand operation (counterclockwise) to unlock
R = Right-hand operation (clockwise) to unlock

Key Pull Positions
–1 = One key pull position
–2 = Two key pull positions

Basic Part Number

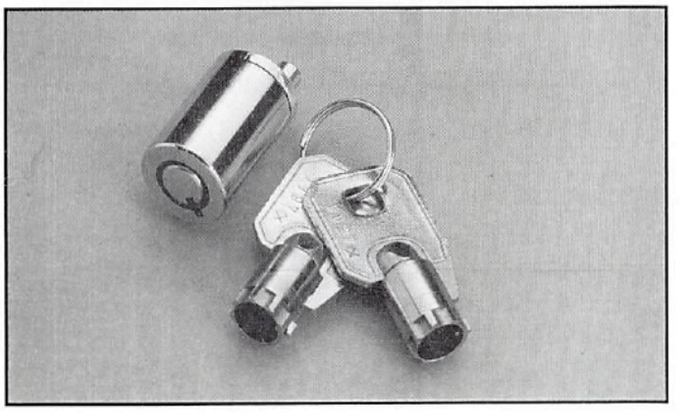

PTCL28
- Designed for tubular installation such as U-bar bicycle locks.
- 7-pin lock provides up to 800,000 combinations.
- Internally threaded spindle post allows attachment of special pawl types.
- Zinc housing, bright chrome finish.

Part Number: PTCL28-1-1AA

PTCL25

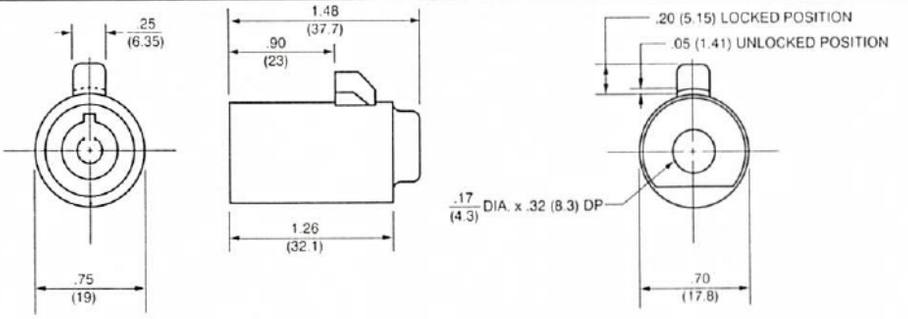

PTCL28

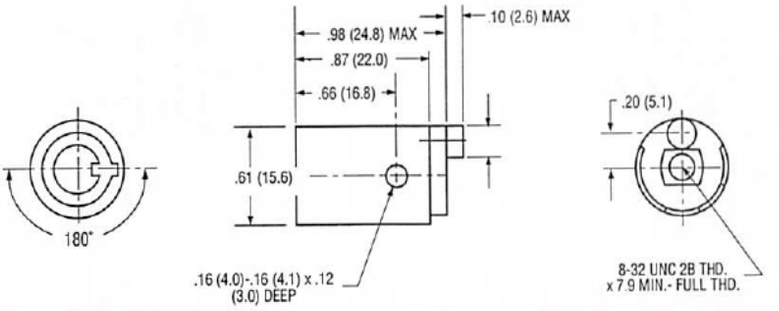

Dimensions are expressed as follows: inch (millimeters) or inch (millimeters).

Get quote
Angic Global Solutions 1-888-872-0690
https://www.AngicGlobal.com Sales@AngicGlobal.com

FLAT KEY LOCKS PTCL12/PTCL56/PTCL59

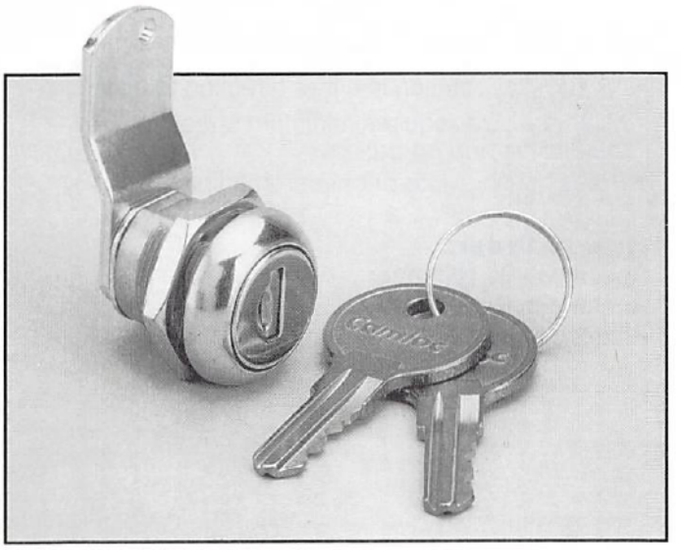

- Rivet or screw pawl attachment.
- With or without dust shutter.
- Zinc alloy die casted housing, with stainless steel caps.
- Disc tumbler cylinder.
- Durable, solid brass, single-bitted key resists rust and corrosion.
- Key removable in locked and unlocked position.

How to Order:
Rivet Attached Pawl:
Long, Offset Pawl: PTCL12-85-1AA
Short, Flat Pawl: PTCL56-1-1AA
Screw Attached Pawl: PTCL59-1-1AA

These flat key lock series offer an excellent combination of compactness, versatility and economy. Locks can be supplied keyed differently or alike. A choice of pawl shapes are available; please contact Camloc Products.

Installation Hole

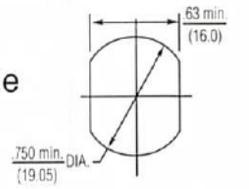

Rivet Attached Pawl:
PTCL12

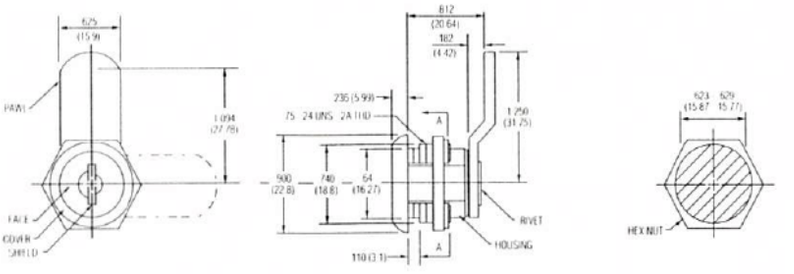

PTCL56

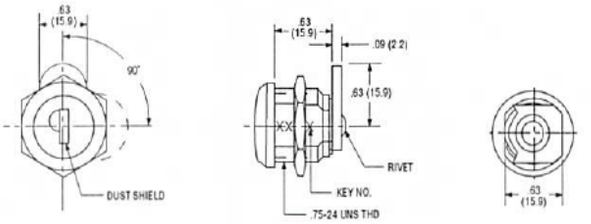

Screw Attached Pawl:
PTCL59

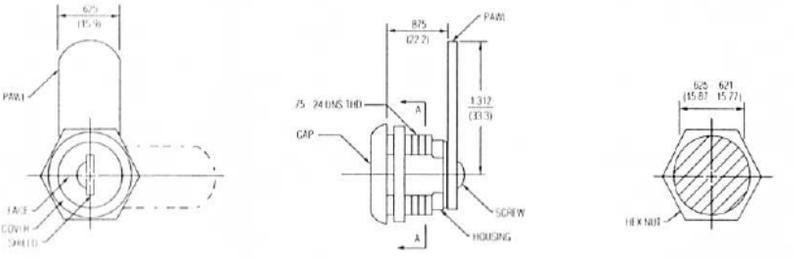

Dimensions are expressed as follows: inch (millimeters) or inch (millimeters).

G

ANGIC
Get quote
Angic Global Solutions 1-888-872-0690
https://www.AngicGlobal.com Sales@AngicGlobal.com

IDEAL FOR ELECTRONICS EQUIPMENT

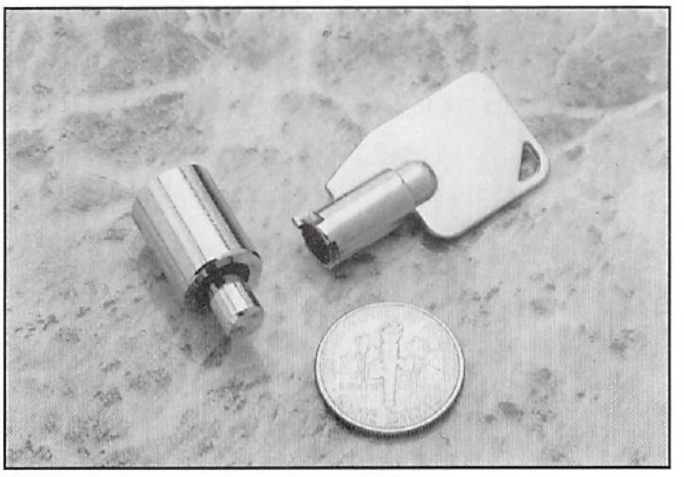

- Push with finger to lock.
- 1/4 turn key rotation in either direction to open.
- Miniature size requires minimum space for installation and operation.
- Brass housing with bright chrome finish.

How to Order:
Specify by Part Number
Anchor Pin Retained: PTCL69-1R1-1AA
Bezeled Nut Retained: PTCL66-1RN1AA

Less than 1/2 inch in diameter, PTCL66 and PTCL69 Series offer security in lightweight, compact envelopes. The PTCL69, pictured, is an anchor pin retained type, while the PTCL66 is a bezeled, nut retained type. Their small size makes these locks ideal for electronics and high technology office equipment where space is limited; their low weight is well suited to recreational equipment like bicycles and ultralight aircraft. Grooveless spindles deter picking; 7-pin versions offer increased key security. Center spindles are hardened steel.

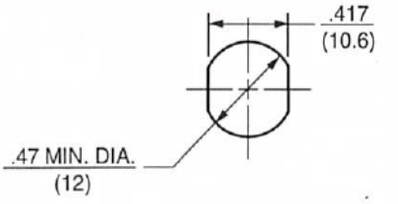

Installation Hole (PTCL66 Only)

PTCL66

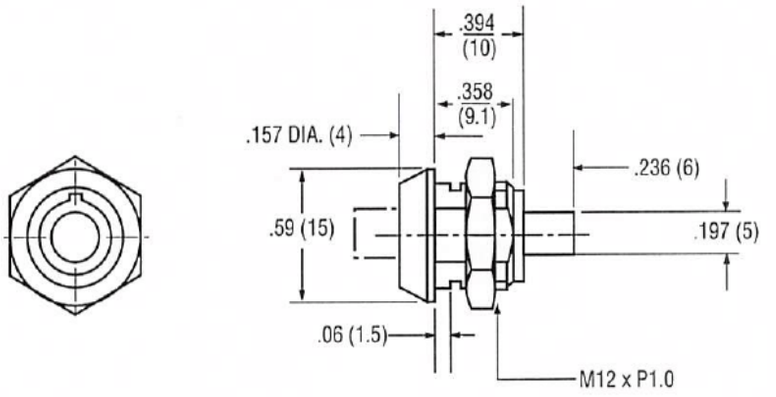

PTCL69

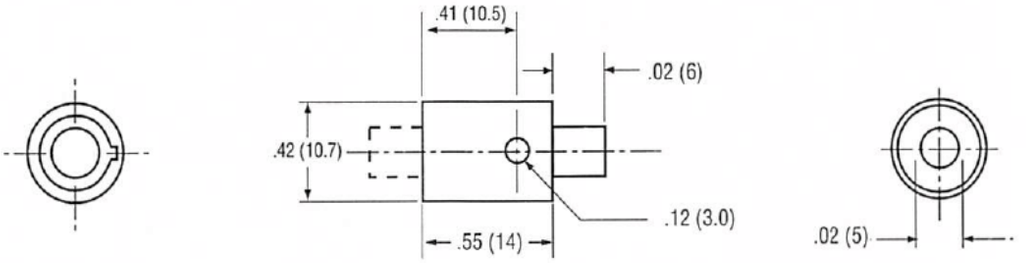

Dimensions are expressed as follows: inch (millimeters) or inch (millimeters).

Get quote
Angic Global Solutions 1-888-872-0690
https://www.AngicGlobal.com Sales@AngicGlobal.com

CAMLOC LATCHES SELECTOR GUIDE

Included in this catalog is a wide choice of tension latches,pawl latches, flush-mounted panel latches and chassis latches. Each design provides secure lock-up, quick operating action and high performance.

Section Contents

	Page No.
Design and Features of Light, Medium and Heavy Duty Latches	H-4 - H-5
Light Duty Latches	H-6 - H-12
Medium Duty Latches	H-14 - H-25
Heavy Duty Latches	H-27 - H-41
Pawl Latches	H-43 - H-55
Panel Latches	H-56 - H-65

Type	General Application	Page No.
Light Duty Tension Latches **Medium Duty Tension Latches** **Heavy Duty Tension Latches** 	Spans the gap between two mating panels and draws them together applying a compressive load to the joint.	H-6 - H-12 H-14 - H-25 H-27 - H-41
Pawl Latches 	Secure hinged panels and doors with easy hand or tool operation; adjustable compression.	H-43 - H-55
Flush-Mounted Panel Latches 	Secure hinged panels and access doors; good cosmetic appearance.	H-56 - H-65

H

Get quote

Angic Global Solutions 1-888-872-0690
https://www.AngicGlobal.com Sales@AngicGlobal.com

Camloc™ Latches for

Designed and manufactured to meet cost and performance requirements of the electronics industry.

Typical Applications

Electronic Computing



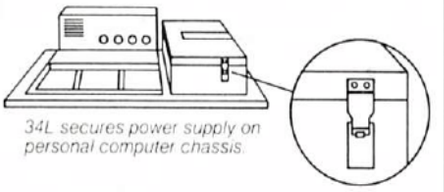

34L secures power supply on personal computer chassis.

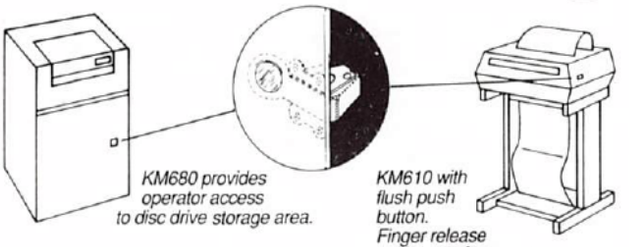

KM680 provides operator access to disc drive storage area.

KM610 with flush push button. Finger release to lift cover for paper loading on printer.



118L secures access door for roll feed on digital plotter.

107L provides limited access and secure clamping for RFI shielding on CPU.

Office Equipment

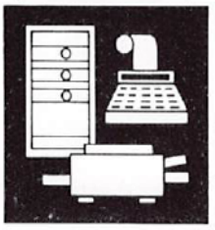

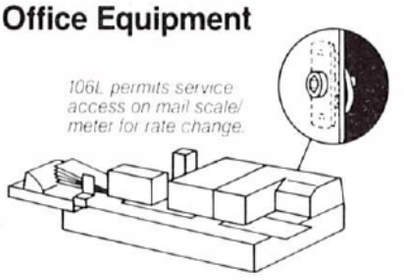

106L permits service access on mail scale/ meter for rate change.

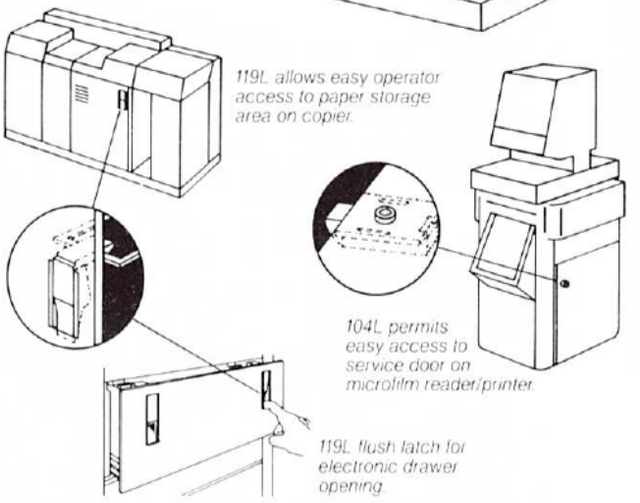

119L allows easy operator access to paper storage area on copier.

104L permits easy access to service door on microfilm reader/printer.

119L flush latch for electronic drawer opening.

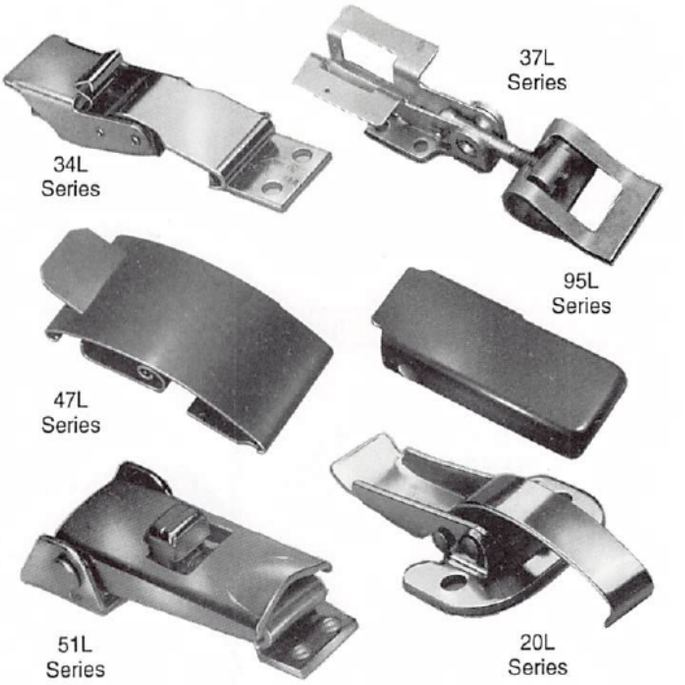

34L Series. Miniature size: available with secondary lock. **37L Series.** Heavy duty, rugged design. Excellent tensile load carrying capacity. **47L Series.** Low profile, large take-up. Styling characteristics of similar plastic versions but is trouble free. **95/96L Series.** Attractive style. Available in two sizes; numerous materials/finishes. **51L Series.** Adjustable series; over 200 variations: secondary locks, right angle bases, extended drawhooks, etc. **20L Series.** Medium duty latch. High strength to weight ratio.

Camloc® Custom Latches

If one of the hundreds of standard latches shown in our catalogs will not suit your particular application, give us a call. Our design staff can no doubt solve your "special" problem. Shown below are just a few of the custom latches designed to suit specific requirements.

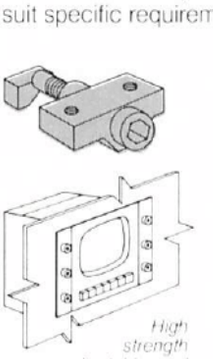

High strength adjustable pawl latch designed to secure military computer cabinets. Permits quick release of unit for servicing and meets high "G" loads.

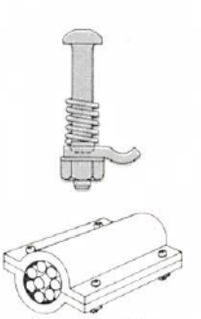

Mini-pawl latch secures two halves of cable conduit on subway transit cars.

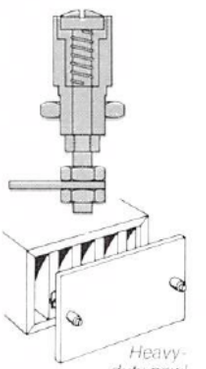

Heavy-duty pawl latch secures outer cover on motor control box.

Camloc is a trademark for Camloc Products Division's entire line of specialty fasteners.

ANGIC GLOBAL SOLUTIONS Get quote

Angic Global Solutions 1-888-872-0690
https://www.AngicGlobal.com Sales@AngicGlobal.com

Electronic Equipment

For modems to black boxes…from office equipment to avionics.

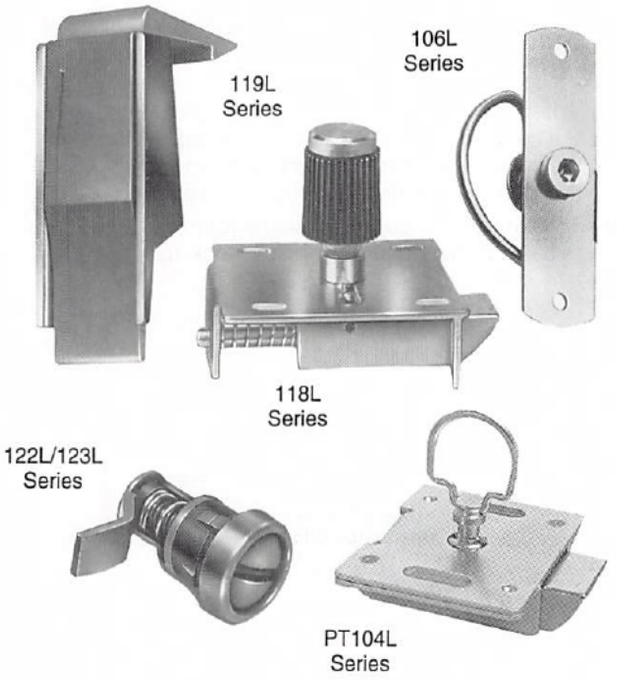

119L Series. Hand installed; requires only finger operation to open **106L Series.** Self adjusting pawl compensates for tolerances and gasket wear. Tool or hand actuator. **118L Series.** 60° turn to open; slam to close. No strike required. **122L/123L Series.** Fully assembled miniature pawl latch in snap-in and panel nut versions provide adjustment to compress RFI gaskets. **104L Series.** Flush latch with hand or tool operation; 1/4-turn to open, slam to close. No strike required.



Camloc III Chassis Latches

Provide mechanical advantage to engage and disengage drawer from pin connectors. Also function as carrying handles. Ideal for compressing RFI/EMI shields as well, or securing chassis equipment against high tension and shear loads.

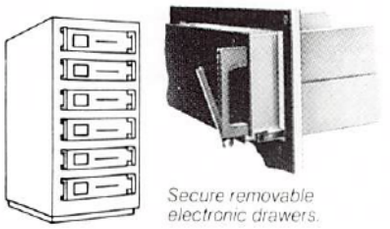

Secure removable electronic drawers.

Typical Applications

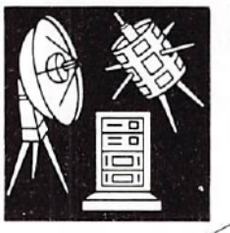

Instrumentation and Telecommunications

47L allows access to modem circuitry; enhances modular styling.

47L secures hinged keyboard to CRT on medical monitor.

104L provides restricted access for servicing data switch gear equipment.

95L attaches outer cover to portable field oscilliscope; smooth appearance.



Military/Aerospace Electronics

112L clamps keyboard to main unit of terrain surveillance equipment.

30L latches interconnect electronic countermeasure equipment modules. Low profile.

51L provides adjustment and moisture seal to gasketed door on naval computer.

Hold down devices secure avionic drawer equipment.

H

ANGIC GLOBAL SOLUTIONS Get quote

Angic Global Solutions 1-888-872-0690
https://www.AngicGlobal.com Sales@AngicGlobal.com

TENSION LATCHES

Light Duty, Medium Duty and Heavy Duty

Design and Features

Basic Components:

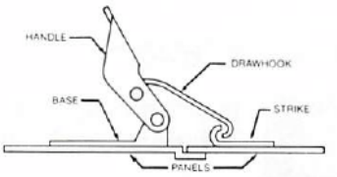

Typical Tension Latch Unlocked Position

How It Operates:

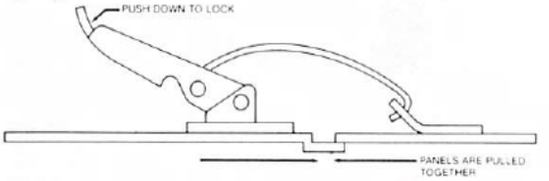

With drawhook engaged in strike, a downward force is applied to handle causing drawhook to pull mating panels together.

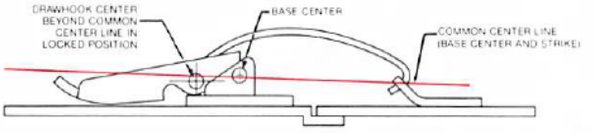

Positive lock is achieved when drawhook center is beyond the common center line of the base and strike. Panels are held in place with tension load on latch.

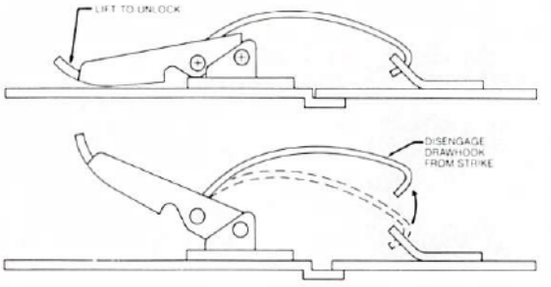

To unlock, simply pull up on handle and disengage drawhook from strike.

Operating Action:
Over-Center and Under-Center.

There are two distinct operating actions for tension latches: over-center and under-center. Both provide positive lock-up.

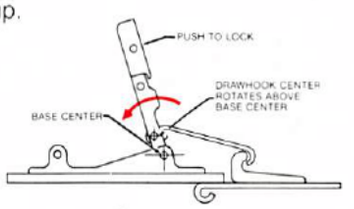

Over-Center Operating Action

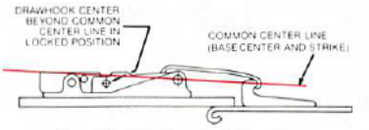

Over-Center Locked Position

Over-center operating action rotates drawhook center over base center and comes to a locked position below the common center line of the base and strike. Its advantages are: low profile and large take-up.

Note: Strike must be mounted on same (or lower) panel plane as base of latch to insure positive lock-up.

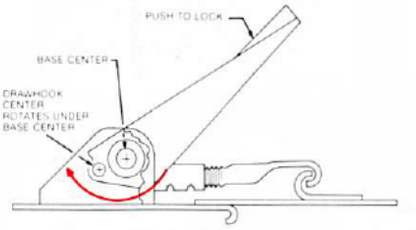

Under-Center Operating Action

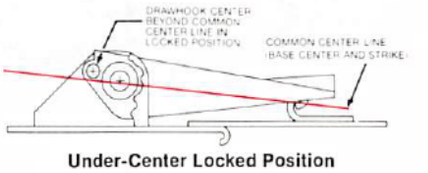

Under-Center Locked Position

Under-center operating action rotates the drawhook center under the base center and comes to a locked position above the common center line of the base and strike. Its advantages are: handle covers drawhook, short length and latch not sensitive to strike position.

Take-Up:

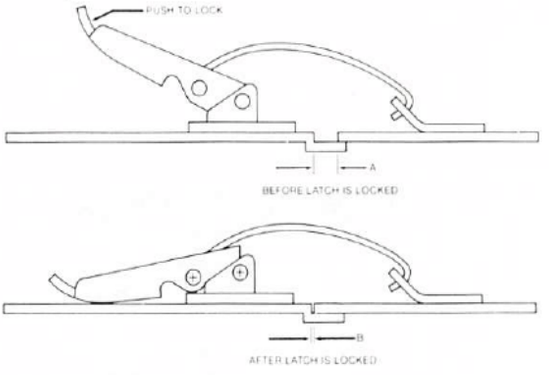

Take-up = A - B

Take-up is the distance latch pulls two mating sections or panels together.

Get quote

Angic Global Solutions 1-888-872-0690
https://www.AngicGlobal.com Sales@AngicGlobal.com

TENSION LATCHES

Adjustment:

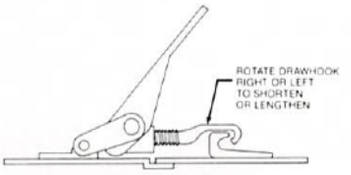

Typical Threaded Drawhook

Many latches are provided with threaded drawhooks. Adjustment of drawhooks' relative position to the strike is made by rotating the drawhook.

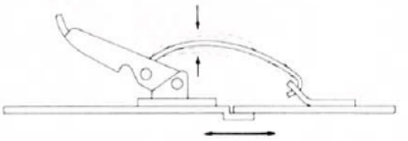

Self-compensating spring-steel drawhooks provide limited self-adjustment.

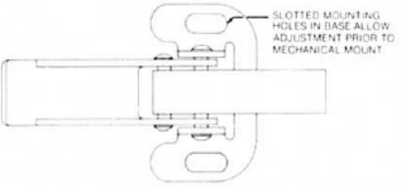

Some latches offer bases with slotted mounting holes, allowing adjustment before fastening latch to panel.

Strength: Ultimate and Working.

Ultimate strength is the load in pounds at which the latch's function is permanently impaired.

Working strength is the maximum load in pounds which can be repeatedly applied without impaired function.

Special Purpose Bases:

Many special purpose bases are available.

• Adjustable Slotted Base Versions.

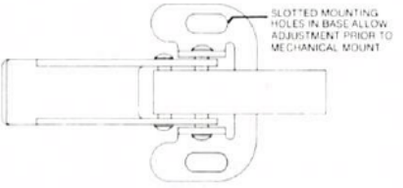

• Radiused or Curved Base Versions.



Side View

• Reverse Base Versions.

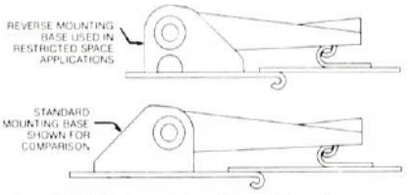

• Mechanical or Weld Mounting Base Versions. Base versions available for mechanical (rivet or bolt) mounting or weld (spot or conventional) mounting.

• Low Profile Versions.

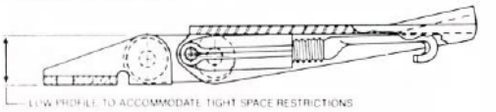

Special Purpose Drawhooks:

Many special drawhook versions are available including, narrow or wide width for space consideration.

• Extended and Special Profile Versions for Gripping Wide Flanges or Spanning Raised Joints.



• Drawhooks with Lift-Spring — Drawhook automatically springs away from strike when disengaged and keeps in upright position while unlocked.

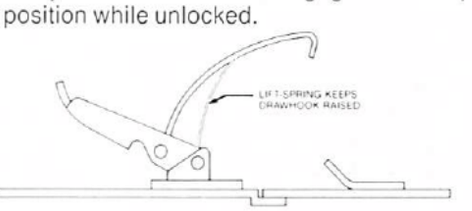

• Reverse Offset Drawhooks.

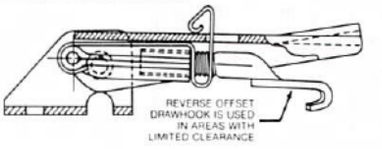

Secondary Lock Versions:

Secondary lock provides added security against accidental opening due to vibration, shock or other influences. Many secondary lock versions available.

• Some Secondary Lock Styles.



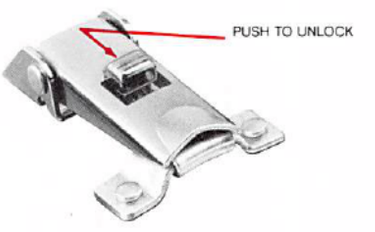

H

ANGIC GLOBAL SOLUTIONS
Get quote
Angic Global Solutions 1-888-872-0690
https://www.AngicGlobal.com Sales@AngicGlobal.com

LIGHT DUTY TENSION LATCHES SELECTOR GUIDE

Latches are shown actual size. Illustrations are typical only, and size may vary by part numbers.

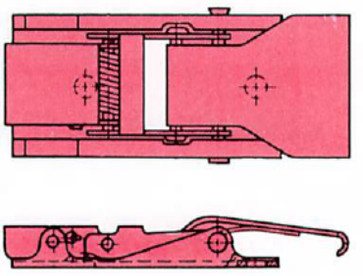

30L Series

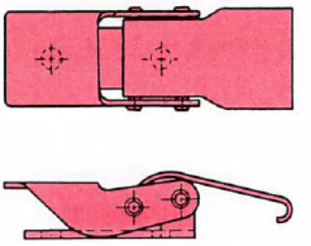

34L Series

Series Number	Page Number	Specifications					
		Strength (lbs.)		Operating Action	Take-up (inches)	Adjustment	
		Ultimate	Working	Over-Center			
30L	H-8	150	80	●	.155 Min.	Self-compensating spring-steel drawhook	
34L	H-9	125	70	●	.150 Min.	Self-compensating spring-steel drawhook	
47L	H-12	100	50	●	.520 Min.	Self-compensating spring-steel drawhook	
95L	H-10 - H-11	100	50	●	1.000 Min.	Self-compensating spring element(s)	
96L	H-10 - H-11	150	100	●	1.000 Min.	Self-compensating spring element(s)	

Note: *For strength values, contact the Camloc Products Division.*

Shown are typical light duty tension latches detailed in this section. See individual pages for size and performance variations.

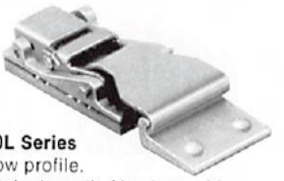

30L Series
Low profile.
High strength. Versions with self-lifting drawhook.



34L Series
Low profile and narrow width.
High strength. Secondary lock versions available.

Get quote

Angic Global Solutions 1-888-872-0690
https://www.AngicGlobal.com Sales@AngicGlobal.com

LIGHT DUTY TENSION LATCHES SELECTOR GUIDE

● = Illustrated in catalog.
△ = Not illustrated in catalog; contact Camloc Products Division for sales drawings.

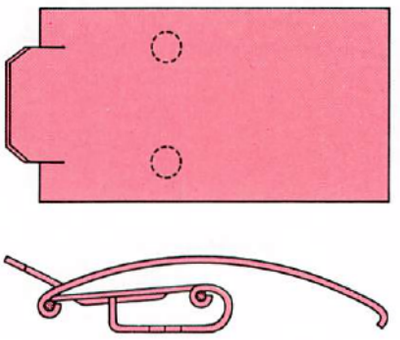

47L Series

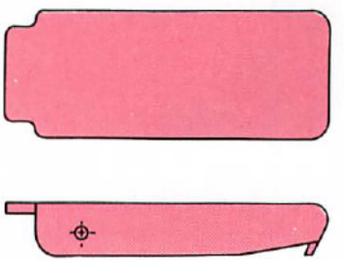

95L Series

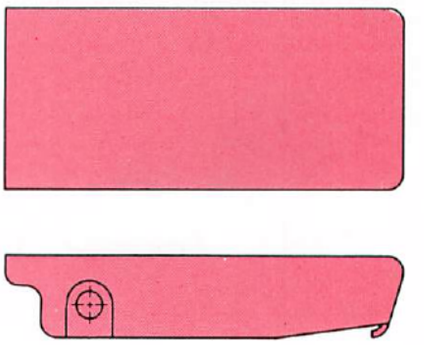

96L Series

	Features						
	Minimum Envelope Versions	Special Purpose Base Versions	Special Purpose Drawhook Versions	Secondary Lock Versions	Decorative Styling Versions	Installation Method	
						Weld Mounting Versions	Mechanical Attachment Versions
	●	△	●	●		●	●
	●			●			●
	●				●		●
	●				●		●
	●				●		●



47L Series
Low profile with decorative styling. Large take-up capability. Steel and stainless.



95L/96L Series
Low silhouette design with decorative styling. Mechanisms concealed under handle. Steel and stainless.

H

Get quote
Angic Global Solutions 1-888-872-0690
https://www.AngicGlobal.com Sales@AngicGlobal.com

LIGHT DUTY TENSION LATCHES — 30L SERIES

Features:

- Low profile (.274 inches maximum protrusion in locked position).
- High strength to weight ratio.
- Versions available with self-lifting drawhook.

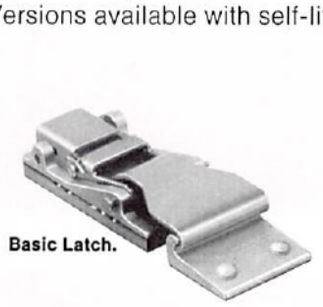
Basic Latch.


Self-Lifting Drawhook Version.

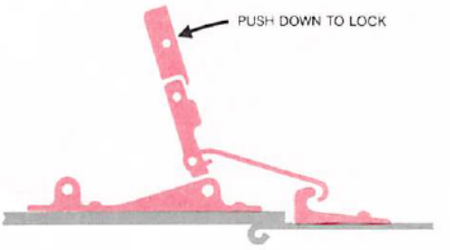

Strength: 150 pounds ultimate; 80 pounds working.

Basic Latch

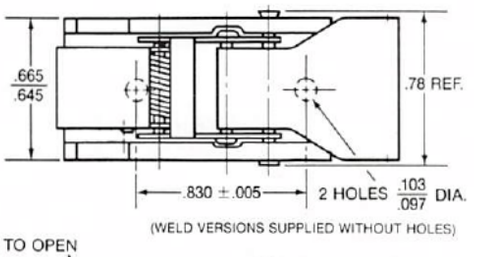

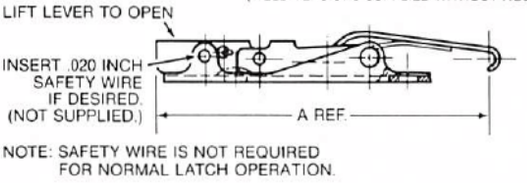

NOTE: SAFETY WIRE IS NOT REQUIRED FOR NORMAL LATCH OPERATION.

Self-Lifting Drawhook Version

A lift spring is concealed under the drawhook. When the latch is opened, drawhook will automatically lift to an included angle of about 80° relative to the lift lever.

Strike

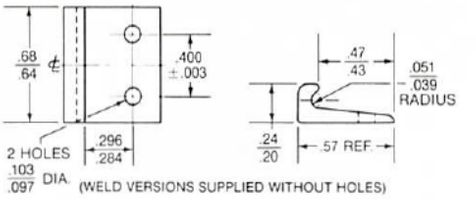

Description	Part No.	Mounting Type	A REF.	Weight Per Piece (lbs.)
Basic Latch	30L1-3	Weld	1.89	.018
	30L1-4	Rivet	1.58	
Drawhook Version Self-Lifting	30L20-1AA	Weld	1.89	.018
	30L20-2AA	Rivet	1.58	
Strike	30L2-3	Weld	—	.003
	30L2-4	Rivet	—	.003

Specifications:

Material: Strike and latch base, aluminum (no finish); other components steel (cadmium plated).
Strength: 150 pounds ultimate; 80 pounds working.
Operating Action: Over-center.
Adjustment: Self-compensating spring-steel drawhook.
Take-up: .155 inches minimum.

Panel Preparation and Installation Data.

Mechanical Attachment:

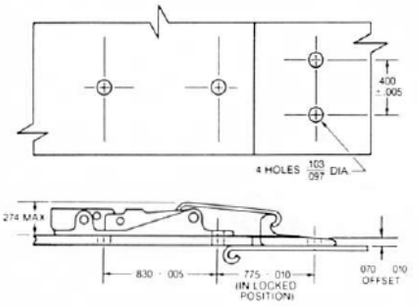

(Thickness of strike base at rivet holes is .042-.062 inch; thickness of latch base is .029-.036 inch.)

1. Locate and form 4 holes .103/.097 Dia.
2. Attach with 3/32 Dia. rivets (not supplied).
3. **Mounting surface of strike must be offset .070 ± .010 inch from mounting surface of latch as shown at left. (Required to insure over center lock up function of latch.)**

Weld Attachment:

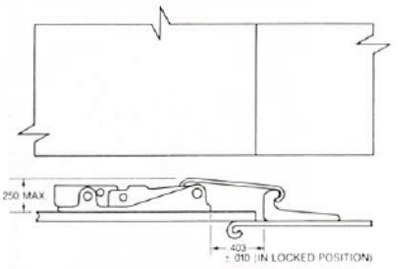

1. Locate latch and strike as required and weld in place.
2. **Mounting instructions (see Note 3, Mechanical Attachment).**

Get quote
Angic Global Solutions 1-888-872-0690
https://www.AngicGlobal.com Sales@AngicGlobal.com

LIGHT DUTY TENSION LATCHES 34L SERIES

Features:

- Low profile (.290 inches maximum protrusion in locked position) and narrow width (.55 inches max.).
- High strength to weight ratio. ■ Secondary lock version available.



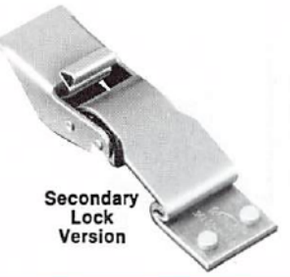

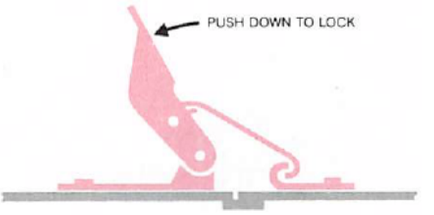

Strength: 125 pounds ultimate; 70 pounds working.

Basic Latch

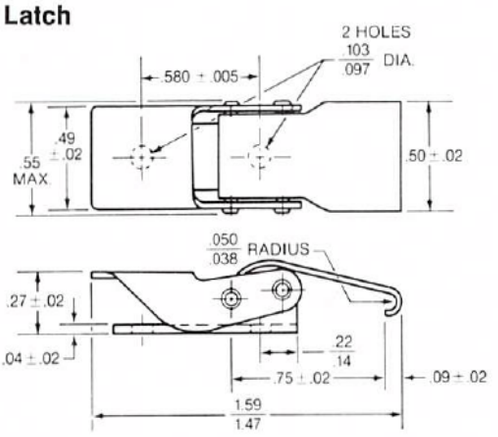

Secondary Lock Version

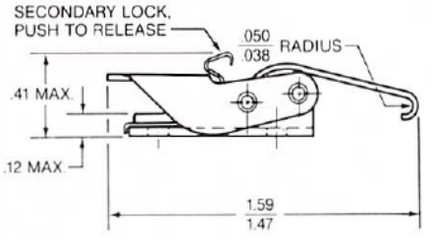

Strike

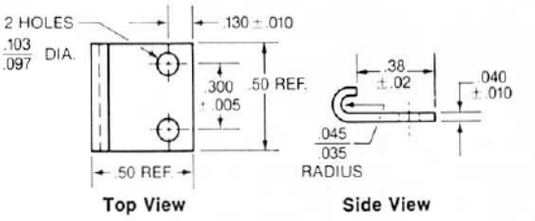

Description	Material	Part No.	Weight Per Piece (lbs.)
Basic Latch	Steel (Cadmium Plated, Gold Chromate)	34L01-1-1AA	.016
	Steel (Zinc Plated, Clear Chromate)	34L01-1-1AB	.016
	Steel (Chromalloy)	34L01-1-1AC	.016
Secondary Lock Version	Steel (Cadmium Plated, Gold Chromate)	34L01-2-1AA	.018
	Steel (Zinc Plated, Clear Chromate)	34L01-2-1AB	.018
	Steel (Chromalloy)	34L01-2-1AC	.018
Strike	Steel (Cadmium Plated, Gold Chromate)	34L02-1-1AA	.007
	Steel (Zinc Plated, Clear Chromate)	34L02-1-1AB	.007
	Steel (Chromalloy)	34L02-1-1AC	.007

Specifications:

Material: See table above.
Strength: 125 pounds ultimate; 70 pounds working.
Operating Action: Over-Center.
Adjustment: Self-compensating spring-steel drawhook.
Take-up: .150 inches minimum.

Panel Preparation and Installation Data.

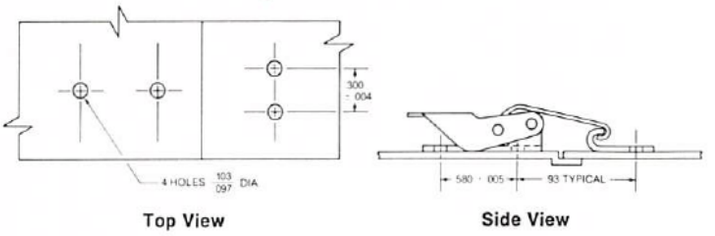

1. Locate and form (4) $\frac{.103}{.097}$ Dia. holes.
   Note: Adjust distance between holes (.93 typical) to obtain desired lock-up load.
2. Attach with 3/32 diameter rivets (not supplied).

H

ANGIC GLOBAL SOLUTIONS
Get quote
Angic Global Solutions 1-888-872-0690
https://www.AngicGlobal.com Sales@AngicGlobal.com

LIGHT DUTY TENSION LATCHES 95L/96L SERIES

Features:

■ Low silhouette design. ■ Attractive appearance. ■ Mechanisms concealed under handle.



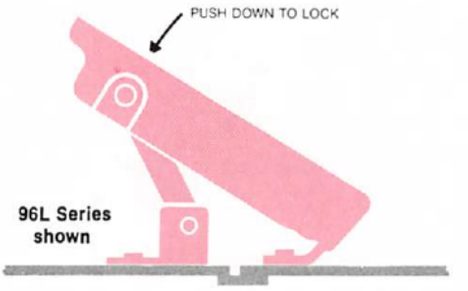

95L Series

Strength: 100 pounds ultimate; 50 pounds working.

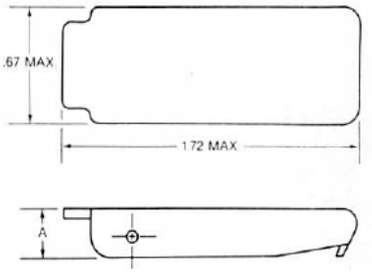

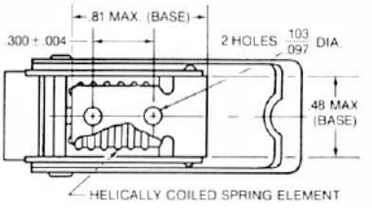

Standard Version
Bottom View 95L01

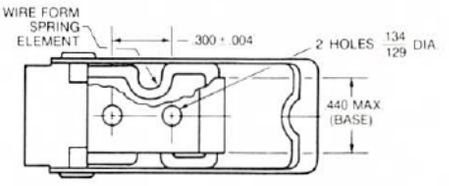

Low Cost Version
Bottom View 95L07

Handle Material & Finish[1]	Latch Version	Latch Part No.	A Max.
Steel (Cadmium Plated, Clear Chromate)	Standard Version (supplied with helically coiled spring element)	95L01-1-1AB	.29
Steel (Chrome Plated)		95L01-1-1AG	
Steel (Nickel Plated)		95L01-1-1AJ	
Steel (Cadmium Plated, Clear Chromate)	Low Cost Version (supplied with wire form spring element)	95L07-1-1AB	.33
Steel (Chrome Plated)		95L07-1-1AG	
Steel (Nickel Plated)		95L07-1-1AJ	
Steel (Cadmium Plated, Black Polyurethane Paint)		95L07-1-1AO	
Stainless Steel (Passivated)		95L07-1-1BC	

Weight Per Piece (lbs.): Standard Version: .029
Low Cost Version: .024

Note: 1. All other latch parts are steel (cadmium plated with clear chromate).

Strike

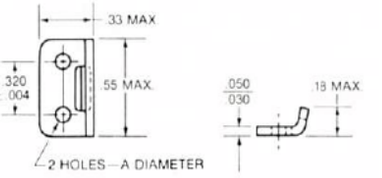

Material	Strike Part No.	A Dia.
Steel (Cadmium Plated, Clear Chromate)	95H01-1-1AB	.103 / .097
	95H07-1-1AB	.134 / .129
Stainless Steel (Passivated)	95H07-1-1BC	

Weight Per Piece (lbs.): .002

Get quote
Angic Global Solutions 1-888-872-0690
https://www.AngicGlobal.com Sales@AngicGlobal.com

96L Series

Strength: 150 pounds ultimate; 100 pounds working.

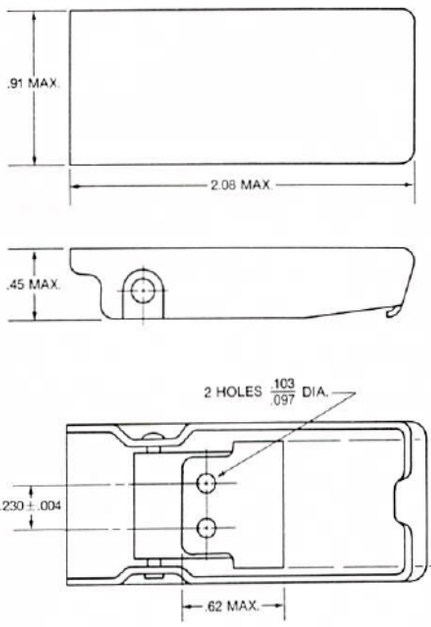

Material	Handle Finish[1]	Standard Latch[2] Part No.
Steel	Cadmium Plated, Clear Chromate	96L01-1-1AB
Steel	Chromium Plated	96L01-1-1AG
Steel	Bright Nickel Plated	96L01-1-1AJ

Weight Per Piece (lbs.): .056

Notes: 1. All other latch parts are cadmium plated with clear chromate.
2. 96L standard latch is supplied with helically coiled spring elements.

Strike

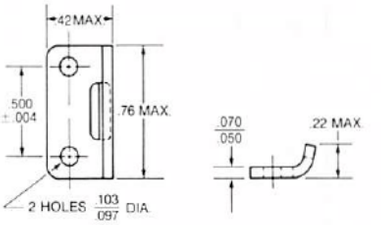

Material	Strike Part No.
Steel, (Cadmium Plated, Clear Chromate)	96H01-1-1AB

Weight Per Piece (lbs.): .005

Specifications:

Material: See tables above.
Strength: 95L: 100 pounds ultimate; 50 pounds working.
96L: 150 pounds ultimate; 100 pounds working.
Operating Action: Over-Center.
Adjustment: Self-compensating spring element(s).
Take-up: 1.00 inches minimum.

Panel Preparation and Installation Data.

95L Series

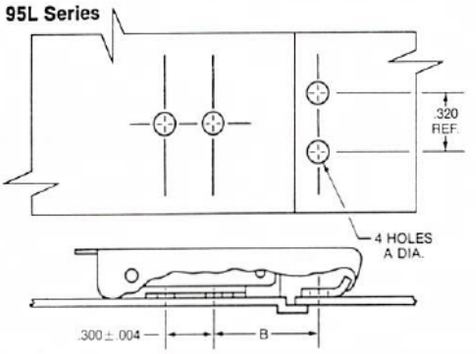

96L Series

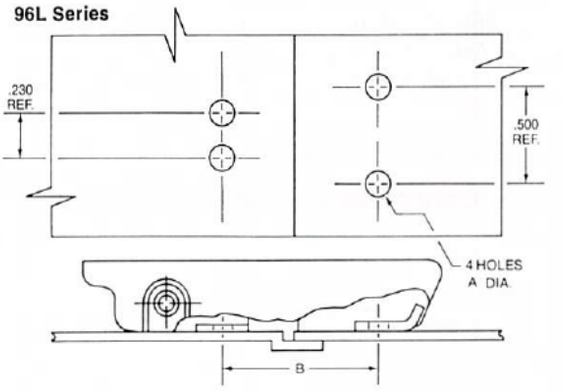

Latch Series	Strike Series	A Dia.	Rivet Dia.	B TYP.	Approximate Clamping Load
95L01	95H01	.103/.097	3/32	.530	18 Pounds
				.590	26 Pounds
95L07	95H07	.134/.129	1/8	.580	N/A
96L01	96H01	.103/.097	3/32	1.000	20 Pounds
				1.060	30 Pounds

1. Locate and form four "A" Diameter holes.
Note: "B" typical will obtain approximate clamping loads as indicated in table.
2. Attach with rivets (size listed in table).

H

Get quote
Angic Global Solutions 1-888-872-0690
https://www.AngicGlobal.com Sales@AngicGlobal.com

LOW-PROFILE, LIGHT DUTY TENSION LATCH 47L SERIES

Features:

■ Attractively styled. ■ Low Profile. ■ Large take-up capability. ■ Low cost.

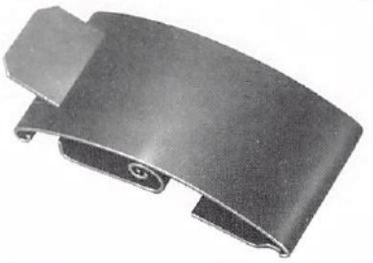

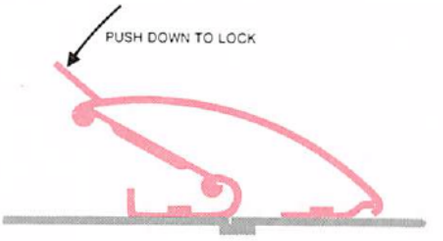

Strength: 100 pounds ultimate; 50 pounds working.

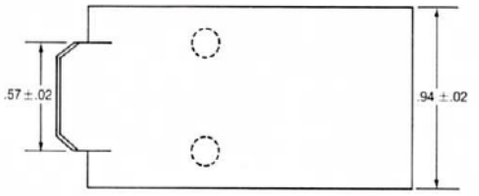

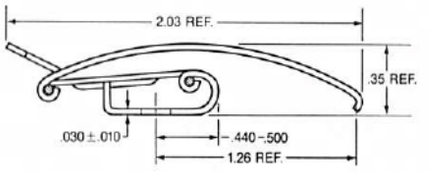

Strike

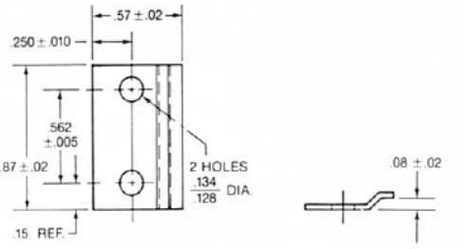

Material	Description	Part No.	Weight Per Piece (lbs.)
Stainless Steel (Passivated)	Latch Assembly	47L01-1-1BC	.031
	Strike	47L02-1-1BC	.004
Stainless Steel (Black Oxide)	Latch Assembly	47L01-1-1BE	.031
	Strike	47L02-1-1BE	.004

Specifications:

Material: See table.
Strength: 100 pounds ultimate; 50 pounds working.
Operating Action: Over-Center.
Adjustment: Self-compensating spring-steel drawhook.
Take-up: .52 inches minimum.

Panel Preparation and Installation Data.

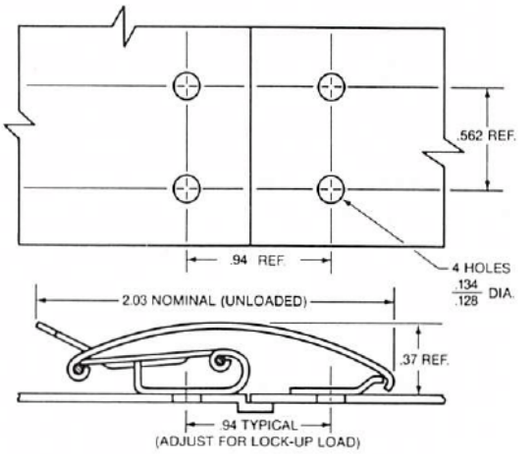

Typical Installation:

1. Locate and form 4 holes $\frac{.134}{.128}$ Dia.

   Note: Adjust distance between holes to obtain desired clamping load. .94 dimension typically allows latch to lock up with no clamping load applied.

2. Attach with No. 5 machine screws or 1/8 inch diameter rivets (not supplied).

Get quote

Angic Global Solutions 1-888-872-0690
https://www.AngicGlobal.com Sales@AngicGlobal.com

Typical Custom Latches

Custom fastener rides in new autos.

(Camloc article excerts as appeared in Machine Design)

A new air filter assembly was needed to fit into the shrinking underhood space of a major auto maker's current model. The box cover, in particular, caused problems.

The air filter lid latch had to meet these requirements:

- Have low profile.
- Blend in with the underhood cosmetic theme.
- Be custom-shaped to fit the housing.
- Be free-standing with no base of its own.
- Snap into an existing boss area without installation tools.
- Be easy to operate by hand.
- Corrosion resistant to withstand 96 hours of salt spray testing.
- Be approximately 50 mm in length and 14 mm wide.

When this problem was presented to designers at Camloc Products, a 47L latch was first suggested. It was a basic design of a low-profile latch made of 17-7PH stainless steel. The steel is heat-treatable, which allowed a tempered drawhook to be made. The latch gets its locking capability from the metal's temper, otherwise it would bend. Using this method allows the latch to retain its shape while the drawhook itself acts as a spring.

Engineers liked the standard design, but modifications were needed. Initally, a rivet-type base had been used, but the housing was changed to allow the latch to snap in place. The handle had to be shortened to provide more of an arc that conformed to the shape of the air cleaner.

Final assembly was suitable for hand installation. The 17-7 PH stainless steel used in the latch is designed to withstand the combination of heat and moisture found under the hood on the air cleaner.

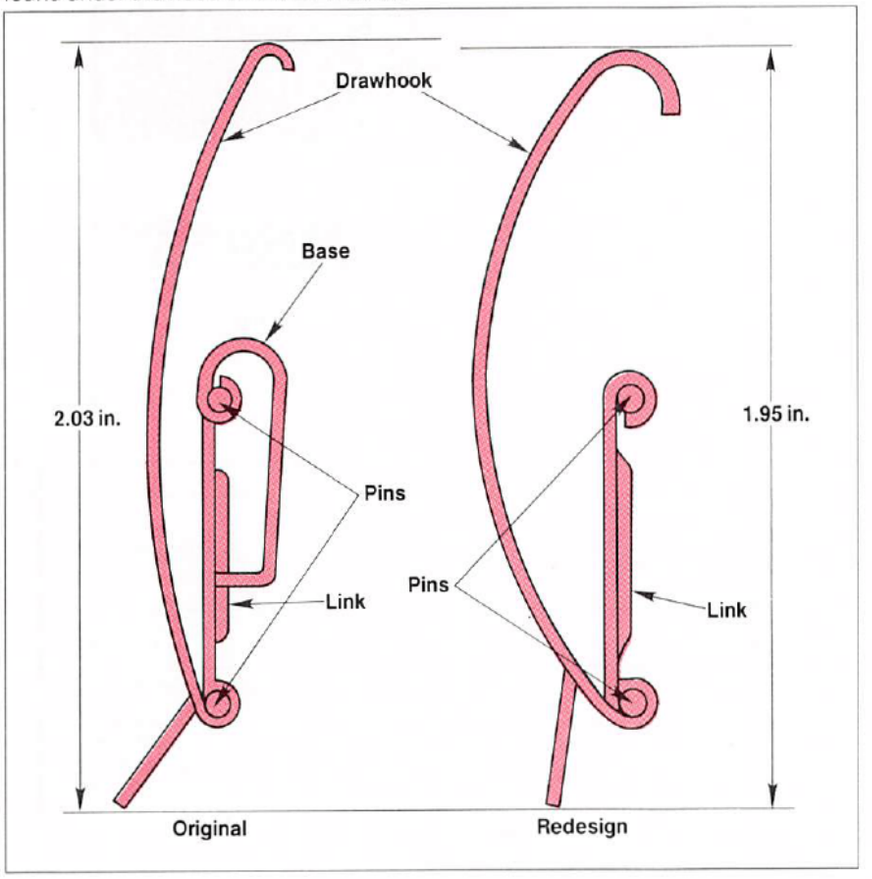

Latch and handle assembly was modified from a previous design to fit an air cleaner.

This custom designed latch helped clean up communications.

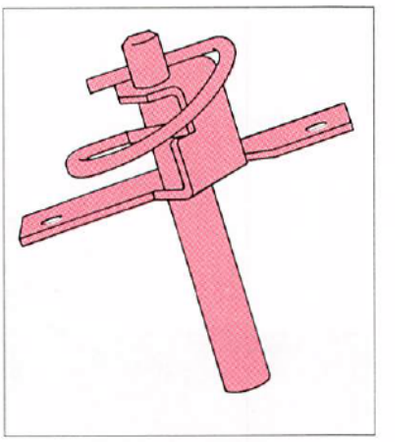

Initially, a latch on a communication switch cabinet was not clamping EMI/RFI gasketing, and not closing properly.

This new latch solved the problem by providing a self compensating wire-form pawl designed to lead into a slot in the cabinet frame, providing sufficient clamping force and vibration resistance.

(See Pawl Latches H-49 through H-66).

H

Get quote

Angic Global Solutions 1-888-872-0690
https://www.AngicGlobal.com Sales@AngicGlobal.com

MEDIUM DUTY TENSION LATCHES SELECTOR GUIDE

Latches are shown actual size. Illustrations are typical only, and size may vary by part numbers.

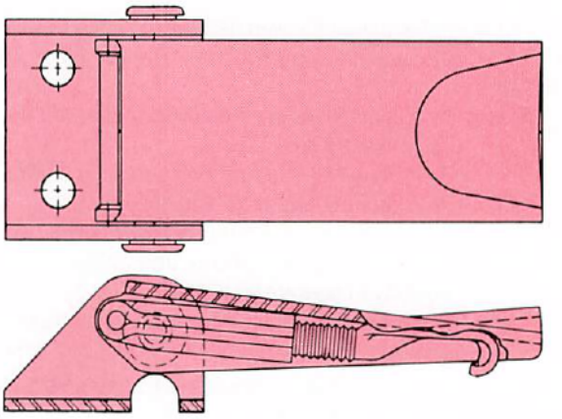

51L Series

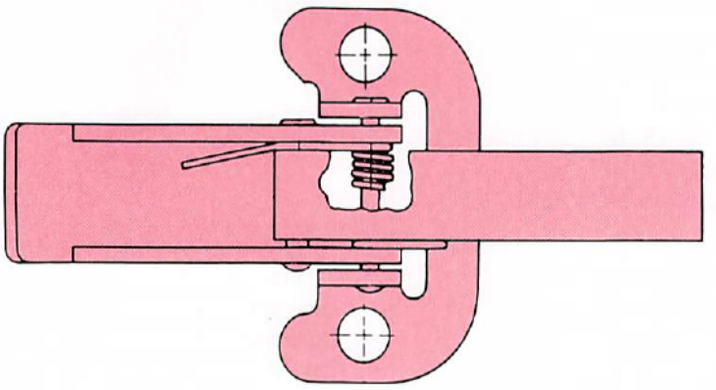

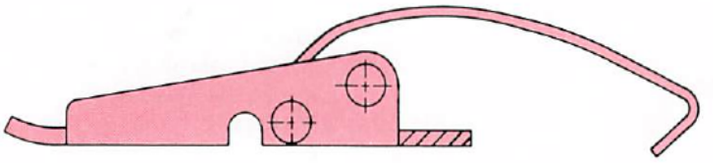

20L Series

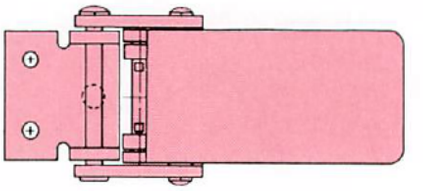

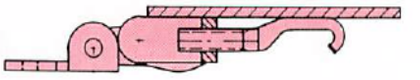

69L Series

Series Number	Page Number	Specifications						
		Strength (lbs.)		Operating Action		Take-up (inches)	Adjustment	
		Ultimate	Working	Over-Center	Under-Center			
20L	H-16 - H-18	200	100	•		.500 Min.	Self-compensating spring-steel drawhook	
51L	H-20 - H-23	500	350		•	.500 Min.	Threaded drawhook: up to .300 inches	
69L	H-24 - H-25	300	200		•	.400 Min.	Threaded drawhook: up to .200 inches	
29L	H-19	250	150	•		.500 Min.	Self-compensating spring-steel drawhook	

Shown are typical medium duty tension latches detailed in this section. See individual pages for size and performance variations.

Get quote

Angic Global Solutions 1-888-872-0690
https://www.AngicGlobal.com Sales@AngicGlobal.com

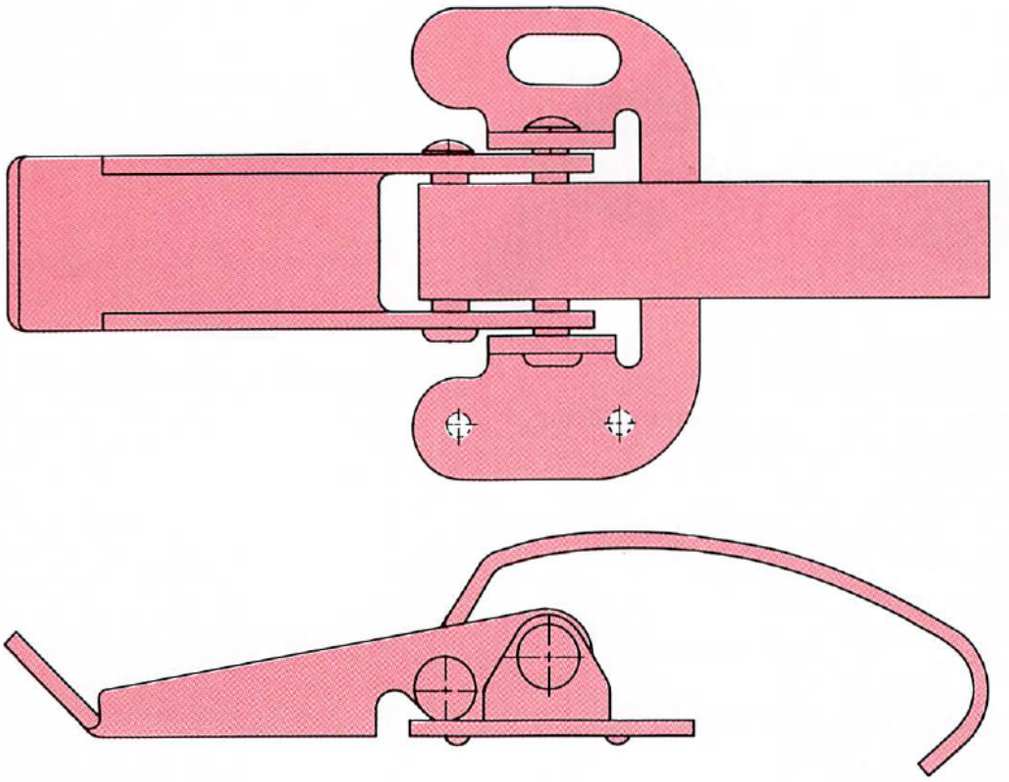

29L Series

	Features						
	Minimum Envelope Versions	Special Purpose Base Versions	Special Purpose Drawhook Versions	Secondary Lock Versions	Hasp Versions	Installation Method	
						Weld Mounting Versions	Mechanical Attachment Versions
	•	•	•			•	•
	•	•	•	•	•	•	•
	•	•	•			•	•
		•	△			•	•

• = Illustrated in catalog.
△ = Not illustrated in catalog; contact Camloc Products Division for sales drawings.

H

Get quote
Angic Global Solutions 1-888-872-0690
https://www.AngicGlobal.com Sales@AngicGlobal.com

MEDIUM DUTY TENSION LATCHES 20L SERIES

Features:

■ Simple rugged design. ■ Can be used with or without a strike. ■ High lift tab available for easy opening.
■ Wide variety of bases and drawhooks. ■ Optional lift spring.

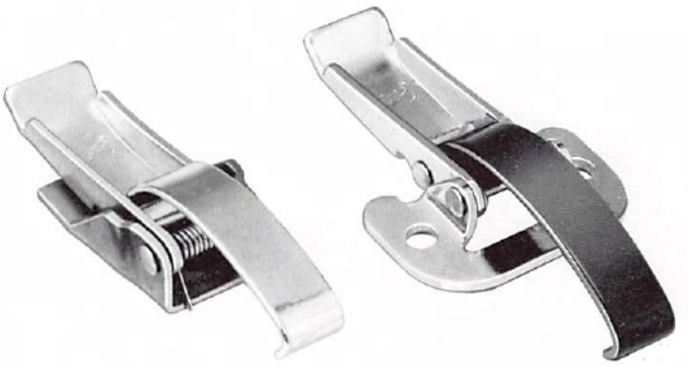

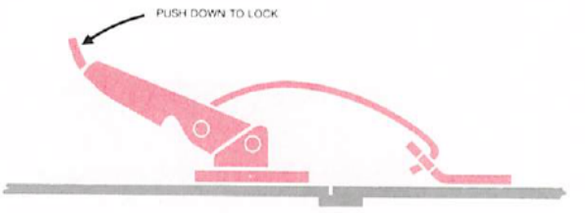

Strength: 200 pounds ultimate; 100 pounds working.

Regular Base

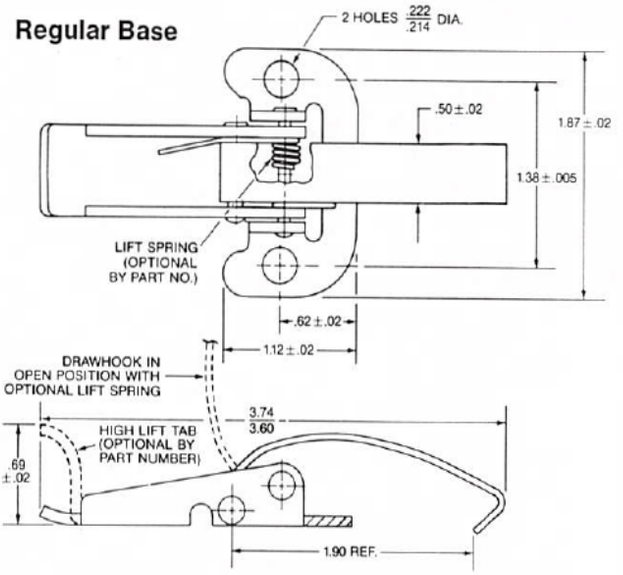

Description	Material	Part No.	Weight Per Piece (lbs.)
Regular Base	Steel (Zinc Plated)	20L01-1-1AA	0.12
	Steel (Chrome Plated)	20L01-1-1AC	
Lift Spring Installed	Steel (Chrome Plated)	20L06-1-2AB	0.13
Regular Base with High Lift Tab	Steel (Zinc Plated)	20L28-1-1AA	0.11
	Steel (Zinc Plated except oil coated base)	20L28-1-1AB	
	Steel (Chrome Plated)	20L28-1-1AC	

Adjustable Base

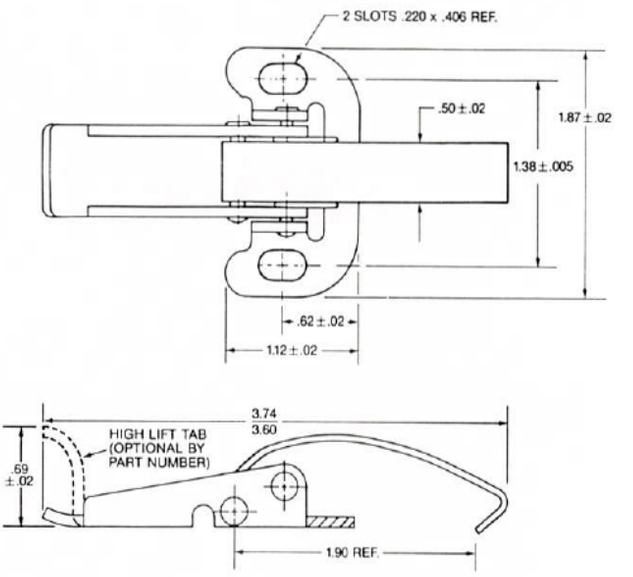

Description	Material	Part No.	Weight Per Piece (lbs.)
Adjustable Base	Steel (Zinc Plated)	20L01-3-1AA	0.11
Adjustable Base with High Lift Tab	Steel (Zinc Plated)	20L28-6-1AA	
	Steel (Zinc Plated except oil coated base)	20L28-6-1AB	
	Steel (Chrome Plated)	20L28-6-1AC	

ANGIC GLOBAL SOLUTIONS
Get quote
Angic Global Solutions 1-888-872-0690
https://www.AngicGlobal.com Sales@AngicGlobal.com

Radiused Base

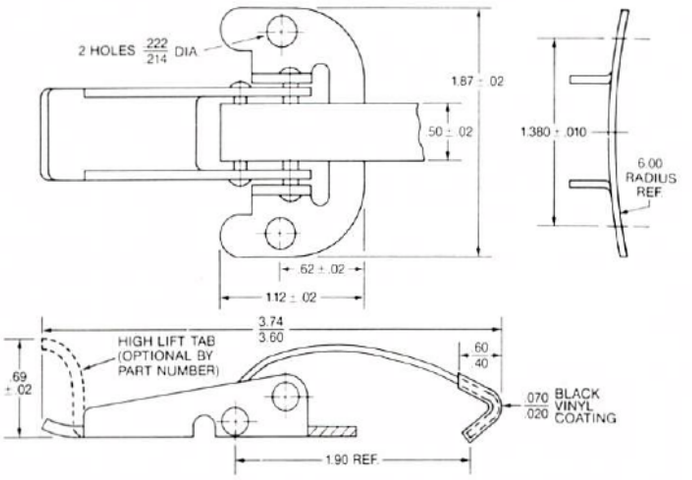

Description	Material	Part No.	Weight Per Piece (lbs.)
Radiused Base	Steel (Chrome Plated)	20L01-4-3AC	0.11
Radiused Base with High Lift Tab	Steel (Zinc Plated)	20L28-4-2AA	
	Steel (Zinc Plated except oil coated base)	20L28-4-2AB	
	Steel (Chrome Plated)	20L28-4-2AC	

Weld-on Base (Regular Width)

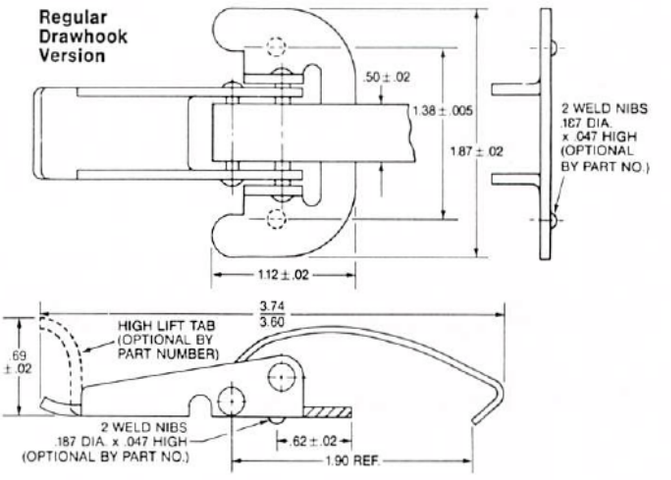

Description	Material	Part No.	Weight Per Piece (lbs.)
Supplied With Weld Nibs	Drawhook: Steel (Zinc Plated) Base: Steel (Oil Coated)	20L01-2-1AB	0.11
Supplied Without Weld Nibs		20L01-5-1AB	
High Lift Tab With Weld Nibs		20L28-2-1AB	0.11
High Lift Tab Without Weld Nibs		20L28-5-1AB	

Weld-on Base (Narrow Width)

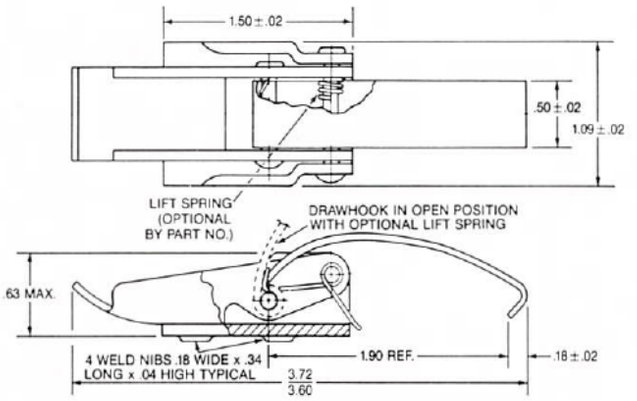

Description	Material	Part No.	Weight Per Piece (lbs.)
Lift Spring Installed.	Drawhook: Steel (Zinc Plated) Base: Steel (Oil Coated)	20L06-1-1AA	0.13
Regular.		20L06-2-1AA	0.12

Short Drawhook Version

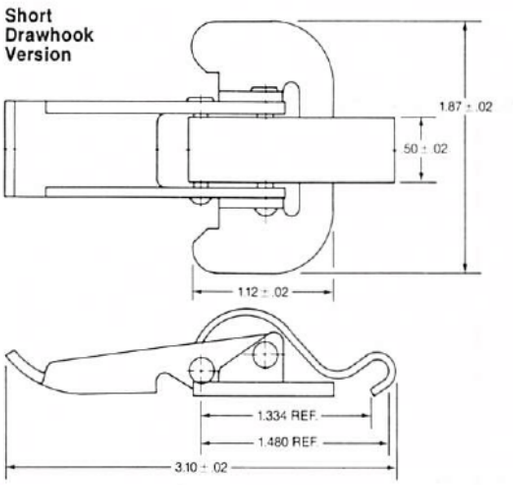

Description	Material	Part No.	Weight Per Piece (lbs.)
Short Drawhook. Supplied Without Weld Nibs.	Drawhook: Steel (Zinc Plated) Base: Steel (Oil Coated)	20L15-1-1AA	0.10

H

Specifications:

Material: See tables.

Strength: 200 pounds ultimate; 100 pounds working.

Operating Action: Over-Center.

Adjustment: Self-compensating spring-steel drawhook. (20L01-3-1AA also has slotted base.)

Take-up: .500 inches minimum.

See strike information on following page.

ANGIC GLOBAL SOLUTIONS Get quote
Angic Global Solutions 1-888-872-0690
https://www.AngicGlobal.com Sales@AngicGlobal.com

Strike

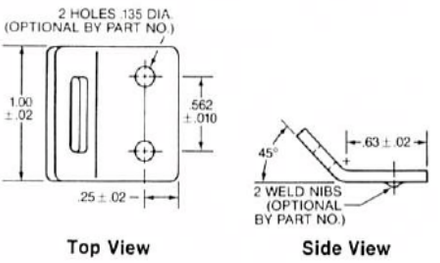

Top View Side View

Description	Material	Part No.
Supplied With Holes For Mechanical Attachment	Steel (Zinc Plated)	20L02-1-1AA
Supplied With Weld Nibs	Steel (Oil Coated)	20L02-2-1AA

Panel Preparation and Installation Data

Installation Using Strike.

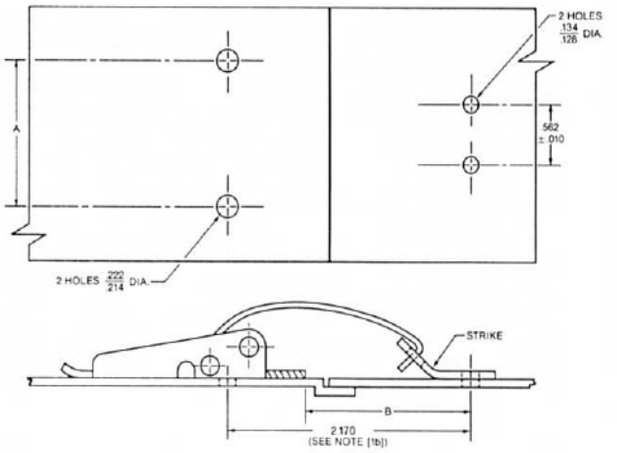

Mechanical Attachment:

1. Locate and form holes for latch and strike.
   (a) Strike can be eliminated by slotting panel or hooking drawhook over an edge. (See Illustration.)
   (b) Adjust "B" or "C" dimension as applicable to obtain desired clamping load. Dimensions referenced typically allow latch to lock up with no clamping load applied.
2. Attach latch with No. 12 bolts or 7/32 inch diameter rivets. Attach strike with No. 5 machine screws or 1/8 inch diameter rivets. (Fasteners are not supplied.)

Weld Attachment:

Locate latch and strike (see notes 1a and 1b above), and weld in place.

Installation in Slotted Panel or Over Edge.

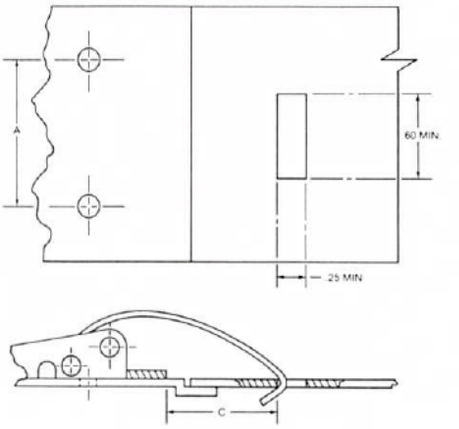

Latch Style	Latch Assembly Part No.	A Ref.	B Typ.	C Typ.
Regular Base	20L01-1-1AA	1.38	1.692	0.970
	20L01-1-1AC			
	20L01-1-2AB			
	20L28-1-1AA			
	20L28-1-1AB			
	20L28-1-1AC			
Adjustable Base	20L01-3-1AA	1.44	1.742	0.970
	20L28-6-1AA			
	20L28-6-1AB			
	20L28-6-1AC			
Radiused Base	20L01-4-3AC	See Part Drawing	1.692	0.970
	20L28-4-2AA			
	20L28-4-2AB			
	20L28-4-2AC			
Weld-on Base	20L01-2-1AB	N/A		
	20L01-5-1AB			
	20L28-2-1AB			
	20L28-5-1AB			
	20L06-1-1AA	N/A	2.122	1.380
	20L06-2-1AA			
	20L15-1-1AA		1.106	0.364

Get quote
Angic Global Solutions 1-888-872-0690
https://www.AngicGlobal.com Sales@AngicGlobal.com

Features:

- Simple rugged design. ■ Adjustable or Weld-on Base. ■ Long handle for easy opening.
- Larger scale than 20L Series for proportional considerations.



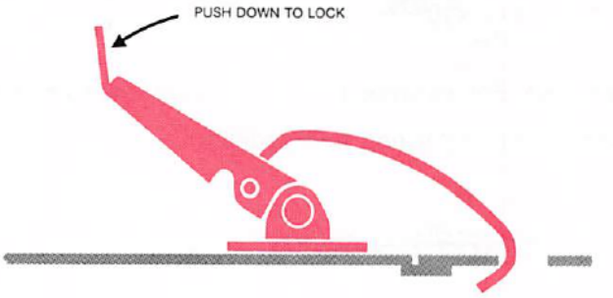

Strength: 250 pounds ultimate; 150 pounds working.

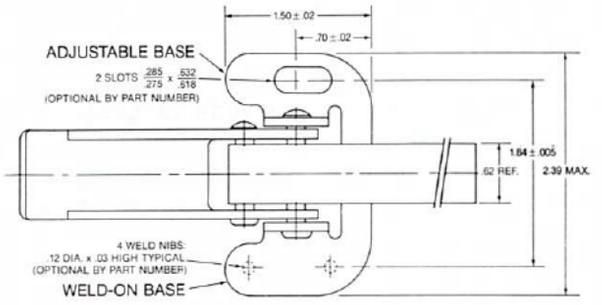

Top View

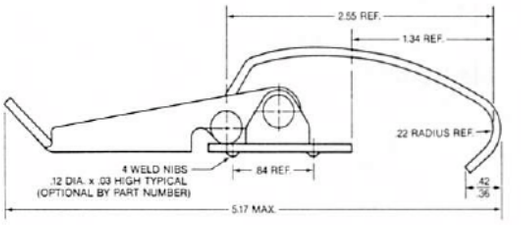

Side View

Description	Material	Part No.	Weight Per Piece (lbs.)
Adjustable Base	Steel (Zinc Plated)	29L01-1-1AA	0.23
Weld-on Base Supplied with Weld Nibs	Drawhook: Steel (Zinc Plated) Base: Steel (Oil Coated)	29L01-2-1AB	0.24

Specifications:

Material: See table.
Strength: 250 pounds ultimate; 150 pounds working.
Operating Action: Over-Center.
Adjustment: Self-compensating spring-steel drawhook. (29L01-1-1AA also has slotted base.)
Take-up: .500 inches minimum.

Mechanical Attachment.

1. Locate and form two .25 Dia. (Ref.) holes.
   Note: Adjust 2.04 dimension to obtain desired clamping load. Reference dimension typically allows latch to lock up with no clamping load applied.
2. Attach with 1/4 inch bolts or rivets (not supplied).

Weld Attachment.

Locate latch (see note above) and spot weld in place.

Panel Preparation and Installation Data.

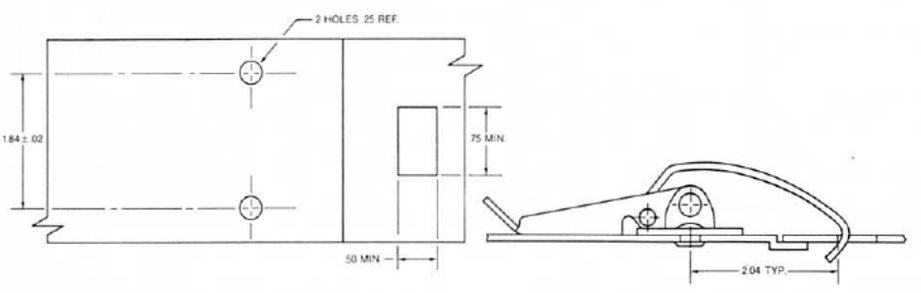

Top View Side View

H

ANGIC GLOBAL SOLUTIONS
Get quote
Angic Global Solutions 1-888-872-0690
https://www.AngicGlobal.com Sales@AngicGlobal.com

MEDIUM DUTY TENSION LATCHES 51L SERIES

Features:

■ Adjustable threaded drawhook. ■ Under-center toggle geometry insures positive lock-up even with latch and strike mounted on different planes. ■ Numerous styles to choose from.

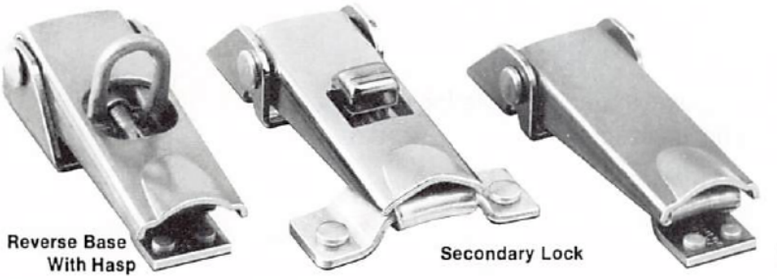

Reverse Base With Hasp

Secondary Lock

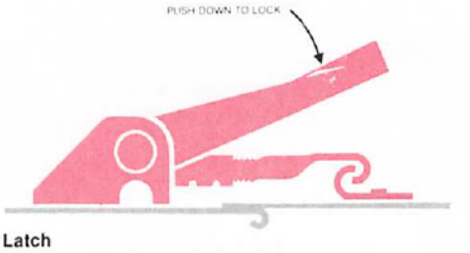

Basic Latch

Strength: 500 pounds ultimate; 350 pounds working.

Hasp Version (for use with padlock).

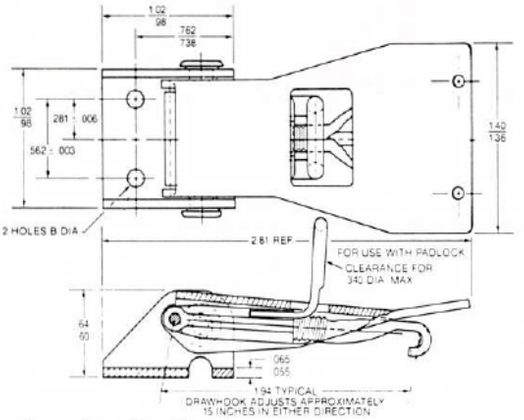

Extended Drawhook Version

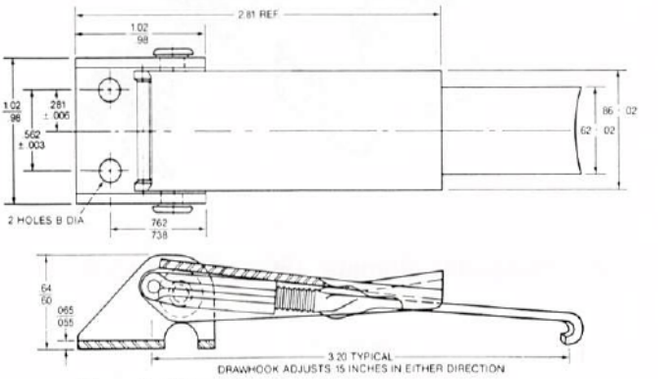

Low Profile Version

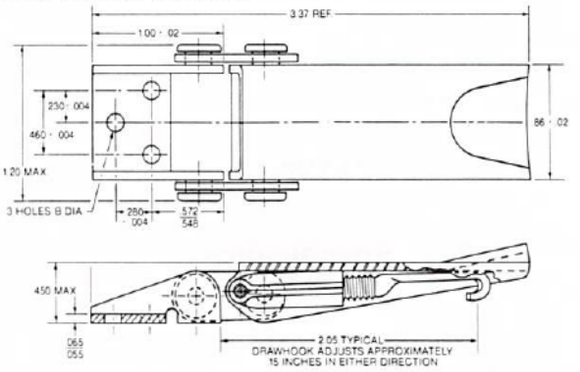

Special Profile Version (Drawhook designed to grip wide flanges).

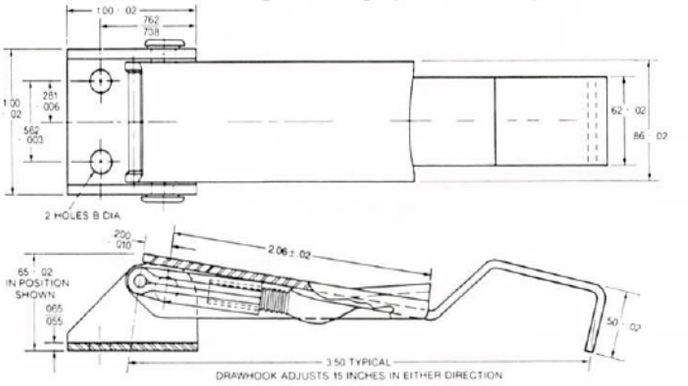

Description	Material	Part No.	B Dia.	Weight Per Piece (lbs.)
Hasp Type	Steel (Cadmium Plated, Gold Chromate)	51L38-1-1AA	.134 / .128	0.12
	Handle: Steel (Chromium Plated); Other: Steel (Cadmium Plated, Clear Chromate)	51L38-1-1AC		
Low Profile	Steel (Cadmium Plated)	51L83-1-1AA	.134 / .129	0.12
		51L83-1H1AA*		0.12
Extended Drawhook	Handle and Base: Steel (Chromium Plated); Other: Steel (Cadmium Plated, Clear Chromate)	51L37-1-1AB	.148 / .140	0.12
Special Profile	Stainless Steel (Passivated)	51L89-1-1AA	.174 / .166	0.13

*P/N 51L83-1H1AA supplied with safety wire hole.

Get quote

Angic Global Solutions 1-888-872-0690
https://www.AngicGlobal.com Sales@AngicGlobal.com

MEDIUM DUTY TENSION LATCHES 51L SERIES

Basic Latch

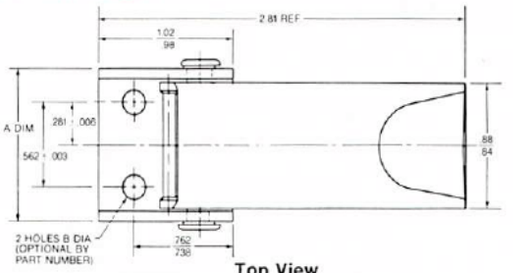

Top View

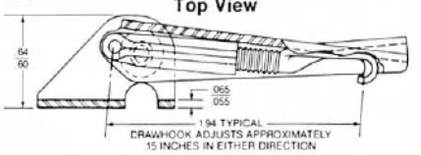

Secondary Lock Version

Standard

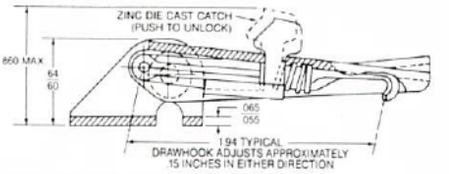

Secondary Lock With Reverse Offset Drawhook (P/N 51L120-1X1AA Only).

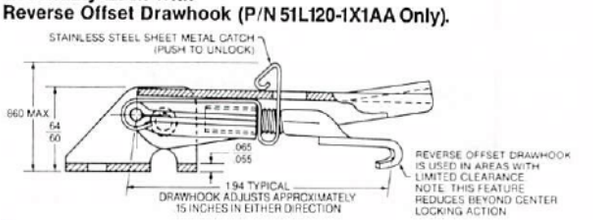

Material[1]	Basic Latch				Secondary Lock Version				
	Part No.	Mounting Method	B Dia.	Weight Per Piece (lbs.)	Part No.	Mounting Method	B Dia.	Weight Per Piece (lbs.)	A Dim.
Steel (Cadmium Plated, Gold Chromate)	51L1-1-1AA	Mechanical	.148/.140	0.11	51L1-1X1AA	Mechanical	.148/.140	0.12	1.02/0.98
	51L1-1H1AA[2]				51L1-1X3AA		.134/.128		
	51L1-1-4AA		.162/.156		51L1-1X4AA		.162/.156		
					51L1-1XH2AA[2]	Weld	N/A		
Handle and Base: Steel (Chromium Plated); Other: Steel (Cadmium Plated)	51L1-1-1AB		.148/.140		51L1-1X1AB	Mechanical	.148/.140		
	51L1-1-4AB		.162/.156		51L1-1X4AB		.162/.156		
Base: Steel (Zinc Plated); Other: Steel (Cadmium Plated)	51L1-1-2AC	Weld	N/A		51L1-1X2AC	Weld	N/A		
Steel (Phosphate Coated)	51L1-1-3AG	Mechanical	.134/.128		51L1-1X3AG[3]	Mechanical	.134/.128		
Stainless Steel (Passivated)	51L1-1-1BF		.148/.140		51L1-1X1BF[4]		.148/.140		
	51L1-1-4BF		.162/.156		51L1-1X4BF[4]		.162/.156		
	51L1-1-2BF	Weld	N/A		51L1-1X2BF[4]	Weld	N/A		
	—	—	—	—	51L120-1X1AA[5]	Mechanical	.148/.140		
					51L120-1X2AA[5]				
Steel (Cadmium, Gold Chromate) Base: Aluminum	51L5-1-1AA	Mechanical	.148/.140	0.10	51L5-1X1AA	Mechanical	.148/.140	0.11	1.14/1.10
	51L5-1-2AA	Weld	N/A		51L5-1X2AA	Weld	N/A		

Notes: 1. *Unless otherwise specified, secondary lock versions are supplied with a Zinc Die Cast catch.*
2. *P/N's 51L1-1H1AA and 51L1-1XH2AA are supplied with safety wire hole.*
3. *P/N 51L1-1X3AG, secondary lock version, supplied with Cadmium Plated, Clear Chromate catch.*
4. *P/N's 51L1-1X1BF, -1X4BF, -1X2BF, secondary lock versions, supplied with Chromium Plated catch.*
5. *P/N's 51L120-1X1AA and -1X2AA are supplied with a formed stainless steel sheet metal catch.*

Specifications:

Material: See table.
Strength: 500 pounds ultimate;
350 pounds working.
Operating Action: Under-Center.
Adjustment: Threaded drawhook: up to .300 inches.
Take-up: .500 inches minimum.

H

ANGIC
Get quote
Angic Global Solutions 1-888-872-0690
https://www.AngicGlobal.com Sales@AngicGlobal.com

Reverse Base Latches.

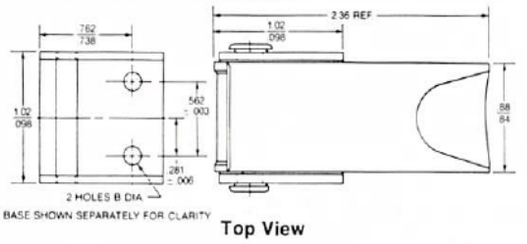

Top View

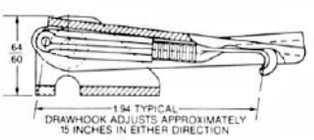

Regular Version

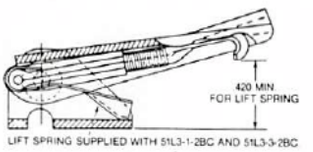

Regular Version with Lift Spring

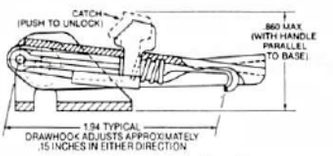

Secondary Lock Version

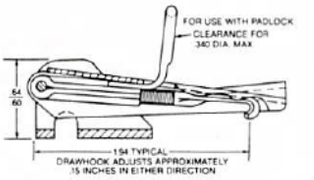

Hasp Version

Specifications:

Material: See table.
Strength: 500 pounds ultimate;
350 pounds working.
Operating Action: Under-Center.
Adjustment: Threaded drawhook: up to .300 inches.
Take-up: .500 inches minimum.

Material[1]	Regular Version			Secondary Lock Version			Hasp Version		
	Part No.	B Dia.	Weight Per Piece (lbs.)	Part No.	B Dia.	Weight Per Piece (lbs.)	Part No.	A Dia.	Weight Per Piece (lbs.)
Steel (Cadmium Plated, Gold Chromate)	51L3-1-1AA	.148 / .140	0.11	51L3-1X1AA	.148 / .140	0.12	51L109-1-1AA	.136 / .128	0.12
							51L109-2-1AA	.148 / .140	
Handle & Base: Steel (Chromium Plated); Other: Steel (Cadmium Plated, Clear Chromate)	51L3-1-1AB			51L3-1X1AB			—	—	—
Stainless Steel (Passivated)	51L3-1-1BC			51L3-1X1BC			51L109-1-1BB	.136 / .128	0.12
	51L3-1-2BC[2]						51L109-2-1BB	.148 / .140	
	51L3-3-2BC[2]	.136 / .128							

Notes: 1. Secondary lock versions are supplied with a Zinc die cast catch.
2. P/N's 51L3-1-2BC and 51L3-3-2BC are supplied with lift spring.

Strikes.

Regular Version

Material	Part No.	Mounting Method	A Dia.
Steel (Cadmium Plated, Gold Chromate)	51L7-1AA	Mechanical	.148 / .140
Steel (Chromium Plated)	51L7-1AB		
Steel (Zinc Plated)	51L7-2AC*	Weld	N/A
Steel (Oil Coated)	51L7-3AG	Mechanical	.134 / .128
	51L7-1AG		.148 / .140
Stainless Steel (Passivated)	51L7-1BF		

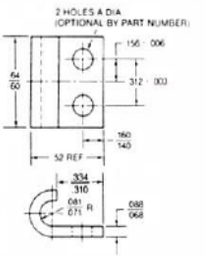

Weight Per Piece (lbs.): 0.10
**Caution: Welding heat may reduce strength of strike.*

Aluminum Version

Material	Part No.	Mounting Method
Aluminum	51L8-1AA	Mechanical
	51L8-2AA	Weld

Weight Per Piece (lbs.): 0.10

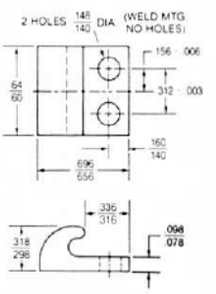

Wide Base Version

Material	Part No.	Mounting Method
Steel (Cadmium Plated, Gold Chromate)	51L59-1-1AA	Mechanical
Steel (Cadmium Plated, Clear Chromate)	51L59-1-1AB	

Weight Per Piece (lbs.): 0.02

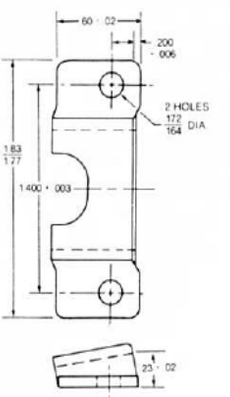

Get quote
Angic Global Solutions 1-888-872-0690
https://www.AngicGlobal.com Sales@AngicGlobal.com

Panel Preparation and Installation Data

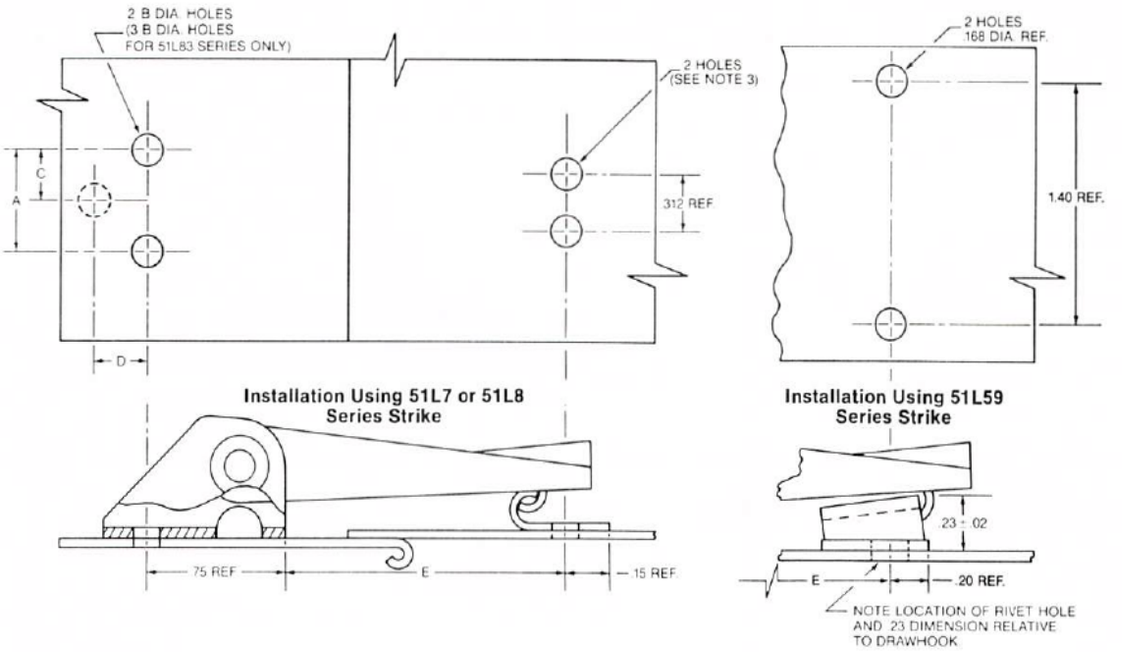

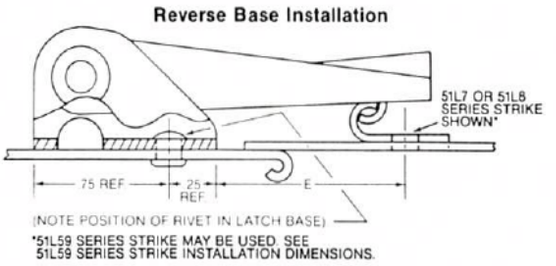

Mechanical Attachment:

1. Locate and form holes for latch and strike.

Important Note: *Please refer to the above illustrations showing correct hole size and location. Note which strike is to be installed and if the latch has a reverse base.*

2. Attach latch and strike with bolts or rivets (not supplied).

Weld Attachment:

Locate latch and strike as required and weld in place.

Part No. Series	Dimensions					
	A Ref.	B Dia. Ref.	C Ref.	D Ref.	51L7 or 51L8 Strike Selected E Typ.	51L59 Strike Selected E Typ.
51L1	.562	Note 1	N/A	N/A	1.670	1.290
51L3					1.170	1.040
51L5		.144			1.670	1.290
51L37					2.926	2.550
51L38		.131			1.670	1.290
51L83	.460		.230	.280	2.230	1.850
51L89	.562	.144	N/A	N/A	3.230	2.850
51L109		Note 1			1.170	1.040
51L120		.144			1.670	1.290

Notes: 1. See applicable table and part number for "B" Diameter.
2. Weld-on versions supplied without holes.
3. 2 holes .144 diameter ref. (2 holes .131 diameter ref. for P/N 51L7-3AG only).

H

Get quote
Angic Global Solutions 1-888-872-0690
https://www.AngicGlobal.com Sales@AngicGlobal.com

MEDIUM DUTY TENSION LATCHES 69L SERIES

Features:

- Adjustable threaded drawhook. ■ Low Profile. ■ High strength to weight ratio.
- Available with base permanently assembled by factory or loose for assembly at user's convenience.
- Under-center toggle geometry insures positive lock-up even with latch and strike mounted on different planes.

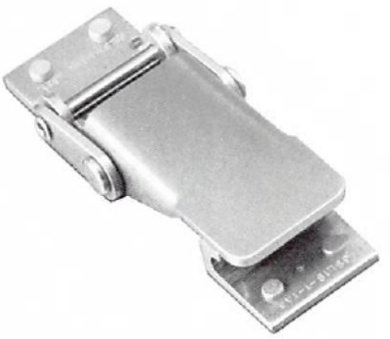

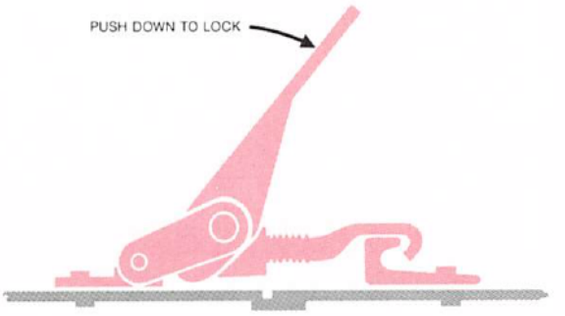

Strength: 300 pounds ultimate; 200 pounds working.

Basic Configuration

Steel base, mechanical attachment illustrated.

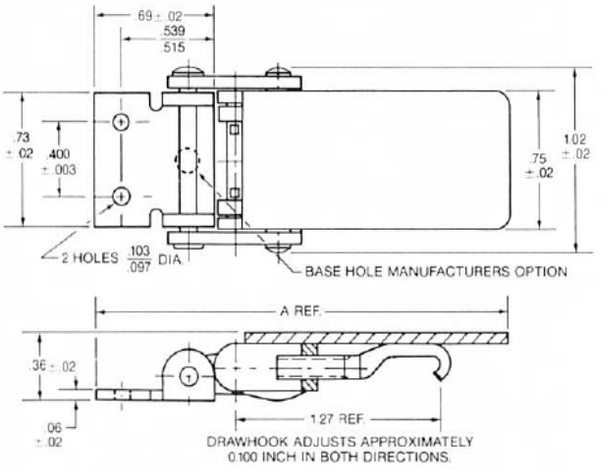

Alternate Bases

See Table below for ordering information.

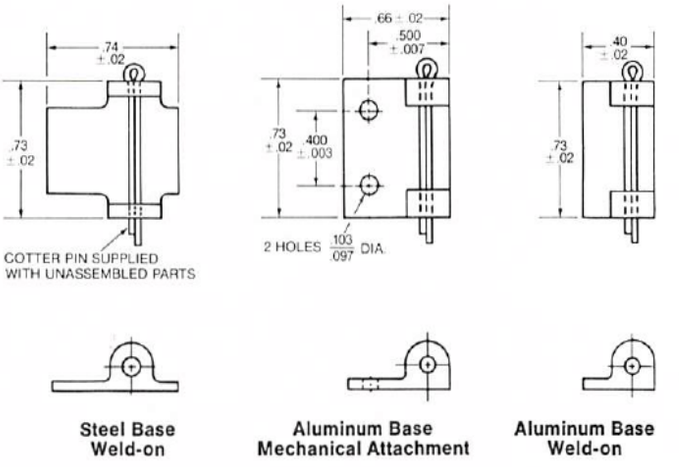

Steel Base Weld-on

Aluminum Base Mechanical Attachment

Aluminum Base Weld-on

Latch Description	Material	Latch Part No. (Includes Base)		Weight Per Piece (lbs.)	A REF.
		Assembled	Unassembled[1]		
With Steel Base/ Mechanical Attachment	Steel (Cadmium Plated) Except Weld-on base supplied unfinished (Oil Coated)	69L33-1-1AA	—	0.06	2.36
With Steel Base/Weld-on		69L38-1-1AA	69L37-1-1AA	0.07	2.43
With Aluminum Base/ Mechanical Attachment	Steel (Cadmium Plated); Base: Aluminum (Unfinished)	69L38-1-3BA	69L37-1-3BA	0.06	2.10
With Aluminum Base/ Weld-on		69L38-1-2BA	69L37-1-2BA		2.36
With Aluminum Base/ Mechanical Attachment	Steel (Zinc Plated); Base: Aluminum (Unfinished)	69L38-1-3BC	—		2.10

Note: 1. Unassembled latches allow the base to be installed first with the balance of the latch (supplied fully assembled) to be joined at some future time. Unassembled latches are supplied with a cotter pin pivot in lieu of the permanent solid pivot supplied on factory assembled parts.

ANGIC
Get quote
Angic Global Solutions 1-888-872-0690
https://www.AngicGlobal.com Sales@AngicGlobal.com

Strikes

Regular Base

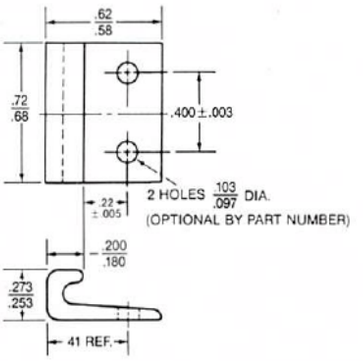

Wide Base

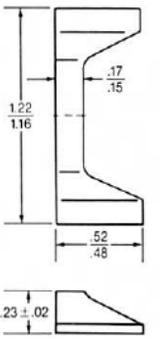

Description	Material	Part No.	Mounting Method	Weight Per Piece (lbs.)
Regular Base	Aluminum (Unfinished)	69L19-1-1AA	Mechanical	0.003
		69L19-2-1AA	Weld-on	0.004
Wide Base	Steel (Unfinished, Oil Coated)	69L2-1-1AA	Weld-on	0.005

Panel Preparation and Installation Data.

Typical Installations:

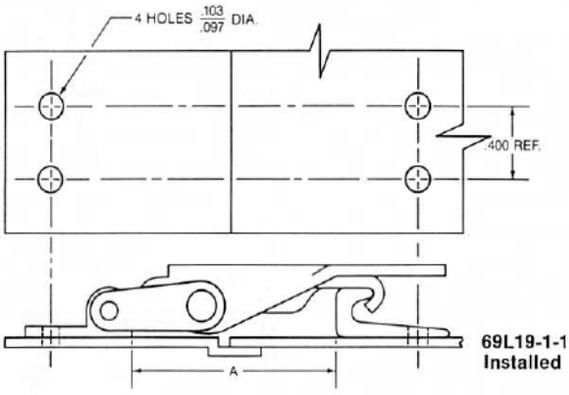

69L19-1-1AA Strike Installed

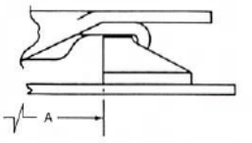

69L2-1-1AA Strike Installed

Latch Part No.	A TYPICAL	
	69L19 Strike Installed	69L2 Strike Installed
69L33-1-1AA	1.21	1.24
69L37-1-1AA	1.23	1.26
69L37-1-2BA	1.27	1.24
69L37-1-3BA	1.24	1.27
69L38-1-1AA	1.23	1.26
69L38-1-2BA	1.27	1.24
69L38-1-3BA	1.24	1.27
69L38-1-3BC	1.24	1.27

Specifications:

Material: See tables.
Strength: 300 pounds ultimate;
200 pounds working.
Operating Action: Under-Center.
Adjustment: Threaded drawhook: up to .200 inches.
Take-up: .400 inches minimum.

Mechanical Attachment:

1. Locate and form 4 holes $\frac{.103}{.097}$ Dia.
2. Attach latch and strike with 3/32 diameter rivets.

Weld Attachment:

Locate latch and strike on center and weld in place.

H

Get quote
Angic Global Solutions 1-888-872-0690
https://www.AngicGlobal.com Sales@AngicGlobal.com

When To Use Latches

(Camloc article excerpts as appeared in Machine Design)

Latches are ideal for securing machine and equipment parts that must be opened or removed frequently. Many can be easily modified to suit special requirements, thereby eliminating the need for custom designs .

Many parts on industrial and business machines, agricultural and construction equipment, aircraft, and road vehicles must be opened or removed frequently to allow periodic servicing. Examples include hinged panels, doors, drawers, windows, and safety guards. All of these components can be secured with latches.

Latches allow quick access because the holding or locking element—a hook, pawl, or bolt—releases immediately when a handle, knob, or tool socket is actuated. Typically, the holding component spans the joint between a panel or door and the supporting frame. The latch base mounts either on the part to be opened/removed or the supporting frame. To lock a latch, a hook, pawl, or bolt must be engaged with a strike, hole, protruding lip, or directly with the mating joint member.

Most latches are available in adjustable versions to accommodate a range of panel and frame thicknesses, so manufacturing tolerances usually are not critical. Such latches usually have a self-compensating drawhook made of spring steel, a slotted mounting base, or a threaded element to facilitate manual adjustment. Some adjustable latches can be set to accommodate gaskets in joints. Latches can be attached mechanically with rivets or screws, or they can be welded in place.

Latches are usually made of steel, finished with a zinc-chromate coating. Other finishes include chrome, black epoxy or polyurethane paint, and black oxide. Another common latch material is stainless steel. Also, aluminum is sometimes used for latch bases where galvanic corrosion may be a problem.

Actuators on hand-operated latches include knobs, levers, or pushbuttons; tool-operated latches use a number of different fittings. Such tool-operated latches are opened with screwdrivers or hex wrenches.

Many versions

A seemingly endless variety of latches is available. The reason for so many different components is that latch suppliers routinely modify standard fasteners to suit special requirements. For instance, a certain overcenter tension latch is available in more than 200 variations. Some of the modifications or options are a secondary lock or hasp, extended drawhook, reversed hook, right-angle mounting base, base with raised pivot, and even special finishes or materials.

Standard latches can be sorted into four general categories:

- Handle-operated latches
- Rotary-actuated latches
- Slide latches
- Panel latches

Design considerations

Latching requirements should be considered at the onset of new product development so that standard fasteners can be selected if possible. If little thought is given to latching until the product design is well underway, the only solution then is to extensively modify standard latches or design entirely new latches, both of which increase costs.

Today's design standards call for an aesthetically pleasing appearance on the outside of machines and equipment. Consequently, latches often must have flush, unobtrusive actuators.

Human engineering also plays an important role in latch selection. Thus, consideration should be given to who must operate the latch, for what purpose, under what circumstances, and how often. For example, if a door on a piece of heavy construction machinery must be opened often by an operator wearing gloves, a large knob or lever is needed. On the other hand, if an access panel on a computer peripheral need be removed only by a service technician, then an inconspicuous tool-operated latch is appropriate.

Electronic equipment poses special requirements for latches. For instance, latches not only must secure access panels and doors, but also may have to provide sufficient clamping force to compress RFI/EMI metalized gaskets. These gaskets prevent radio frequency or electromagnetic interference from entering or being emitted by equipment. In addition, panels on certain electronic equipment must mount flush with outer surfaces, slam closed, and allow only limited access. Such requirements usually can be met conveniently by specifying pull-release and trigger-release panel latches, which are available off the shelf.

ANGIC GLOBAL SOLUTIONS
Get quote
Angic Global Solutions 1-888-872-0690
https://www.AngicGlobal.com Sales@AngicGlobal.com

Shown are typical heavy duty tension latches detailed in this section.
See individual pages for size and performance variations.

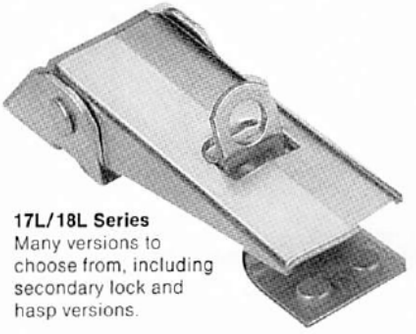

17L/18L Series
Many versions to choose from, including secondary lock and hasp versions.

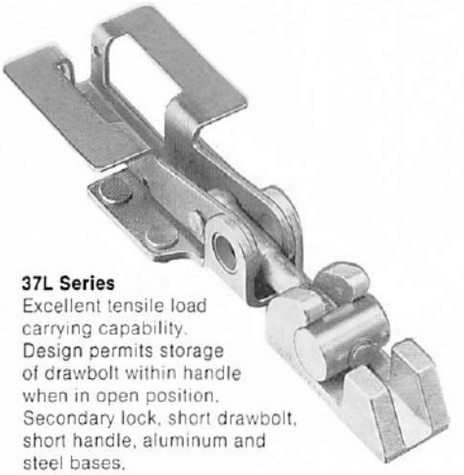

37L Series
Excellent tensile load carrying capability. Design permits storage of drawbolt within handle when in open position. Secondary lock, short drawbolt, short handle, aluminum and steel bases.



46L Series
Low profile. Design permits storage of drawhook within the handle when in open position. Steel or aluminum bases. Reverse base available.



49L Series
Low profile. Drawhook stores in handle when in open position. Decorative styling.



58L Series
Drawhook stores within handle. Available in short handle.

Series Number	Page Number	Specifications					
		Strength (lbs.)		Operating Action		Take-up (inches)	Adjustment
		Ultimate	Working	Under-Center	Over-Center		
17L	H-27	800	600	•		.375 Min.	Threaded drawhook, varies by part number
18L	H-28	1250	950	•		.500 Min.	
37L	H-30-H-37	4500	3000		•	2.00 Max.	
137L	H-36	2250	1500		•		
46L/49L	H-37-H-39	1000	650	•		.380 Min.	
58L	H-76-H-77	2250	1500	•		.400 Min.	

H

Get quote
Angic Global Solutions 1-888-872-0690
https://www.AngicGlobal.com Sales@AngicGlobal.com

HEAVY DUTY TENSION LATCHES 17L/18L SERIES

Features:

■ Adjustable threaded drawhook. ■ Anti-rotation device maintains drawhook adjustment. ■ Under-center toggle geometry insures positive lock-up even with latch and strike mounted on different planes.



Basic Latch
17L01-1-2AA
18L01-1-1AA

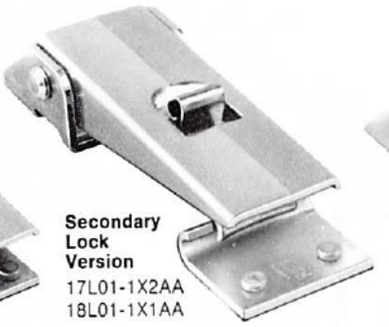

Secondary Lock Version
17L01-1X2AA
18L01-1X1AA



Hasp Version (for use with padlock)
17L01-1Y2AA
18L01-1Y1AA

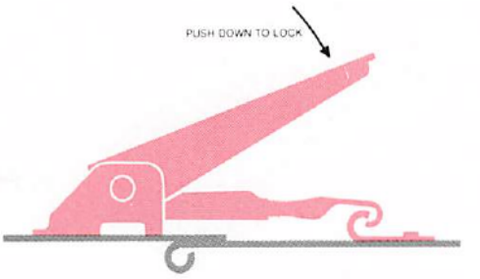

17L Series

Strength: 800 pounds ultimate; 600 pounds working.

Basic Latch

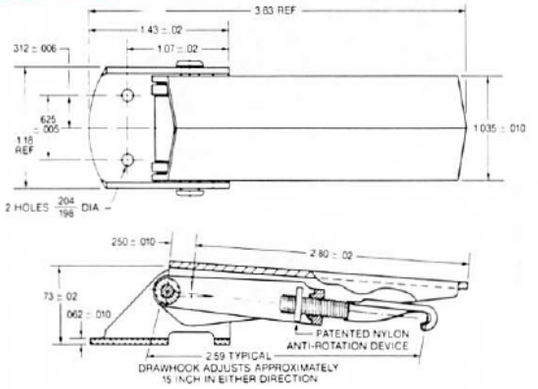

Secondary Lock Version

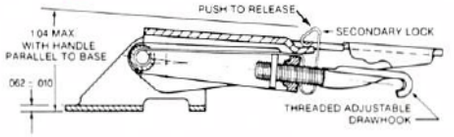

Hasp Version (for use with padlock)

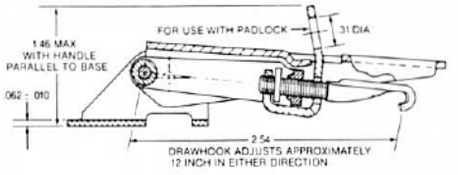

Strike

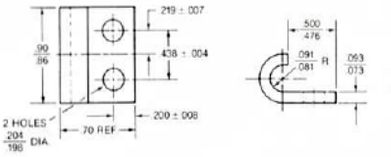

Description	Part No.	Mounting Method	Weight Per Piece (lbs.)
Basic Latch	17L01-1-2AA	Mechanical Attachment	0.18
	17L01-1-3AA	Weld	
Secondary Lock Version	17L01-1X2AA	Mechanical Attachment	0.19
	17L01-1X3AA	Weld	
Hasp Version	17L01-1Y2AA	Mechanical Attachment	0.20
	17L01-1Y3AA	Weld	
Strike	17L11-1-1AA	Mechanical Attachment	0.018
	17L11-2-1AA	Weld	

Specifications:

Material: Steel (Zinc Plated).
Strength: 800 pounds ultimate;
600 pounds working.
Operating Action: Under-Center.
Adjustment: Threaded drawhook adjustment varies by part number. See illustrations.
Take-up: .375 inches minimum.

Get quote

Angic Global Solutions 1-888-872-0690
https://www.AngicGlobal.com Sales@AngicGlobal.com

18L Series

Strength: 1250 pounds ultimate; 950 pounds working.

Basic Latch

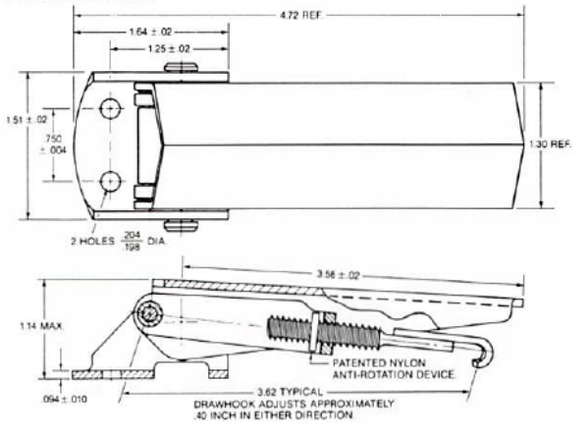

Secondary Lock Version

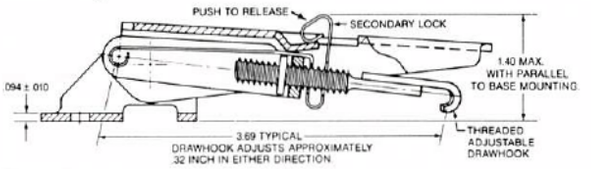

Hasp Version (for use with padlock)

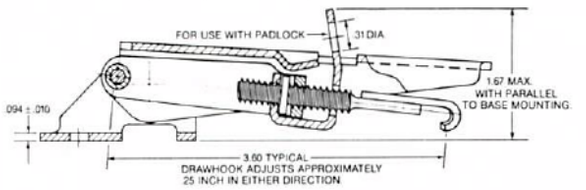

Strike

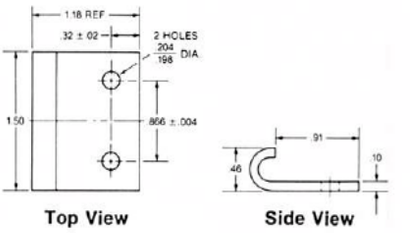

Description	Part No.	Weight Per Piece (lbs.)
Basic Latch	18L01-1-1AA	0.39
Secondary Lock Version	18L01-1X1AA	0.40
Hasp Version	18L01-1Y1AA	0.40
Strike	18L13-1-1AA	0.06

Specifications:

Material: Steel (Zinc Plated).

Strength: 1250 pounds ultimate; 950 pounds working.

Operating Action: Under-Center.

Adjustment: Threaded drawhook adjustment varies by part number. See illustrations.

Take-up: .500 inches minimum.

Panel Preparation and Installation Data.

Mechanical Attachment.

1. Locate and form 4 holes $\frac{.204}{.198}$ Dia.
2. Attach with No. 10 bolts or 3/16 inch diameter rivets (not supplied).

Weld Attachment.

Locate latch and strike as required and weld in place.

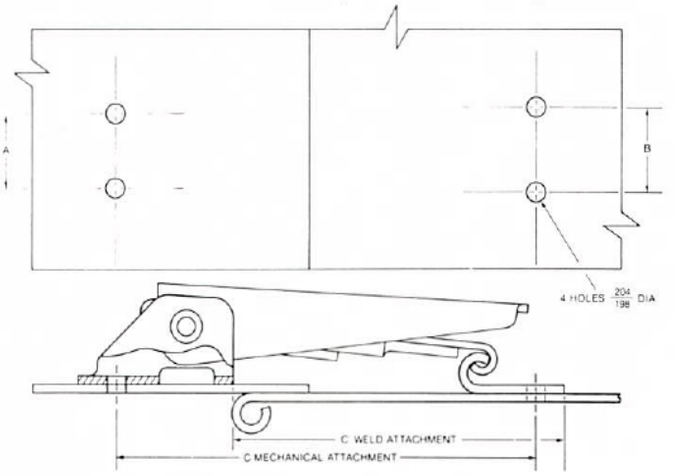

Latch Style	Latch Assembly Part No.	A REF.	B REF.	C TYP.	C1 TYP.
Basic	17L01-1-2AA	.625	.438	3.29	—
	17L01-1-3AA	—	—	—	2.44
	18L01-1-1AA	.750	.866	4.27	—
Secondary Lock Version	17L01-1X2AA	.625	.438	3.29	
	17L01-1X3AA	—	—	—	2.44
	18L01-1X1AA	.750	.866	4.34	—
Hasp Version	17L01-1Y2AA	.625	.438	3.24	
	17L01-1Y3AA	—	—	—	2.40
	18L01-1Y1AA	.750	.866	4.26	—

H

ANGIC GLOBAL SOLUTIONS Get quote
Angic Global Solutions 1-888-872-0690
https://www.AngicGlobal.com Sales@AngicGlobal.com

Features:

■ Rugged design. ■ Excellent tensile load carrying capacity. ■ Handle design permits storage of drawbolt within handle when in the open position. ■ Variety of sizes and styles to choose from. ■ Secondary lock available.

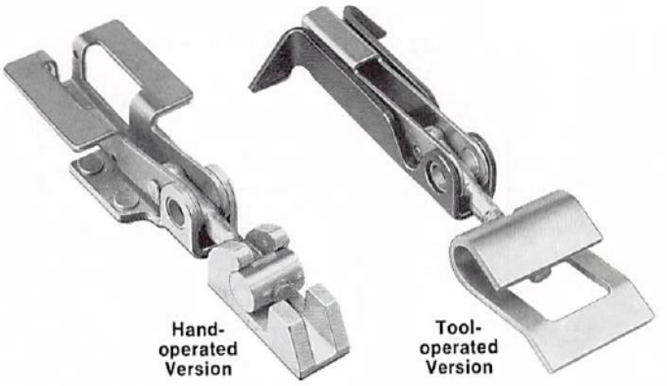

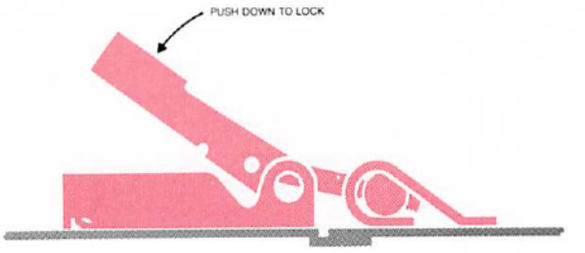

37L52 Series

Tool Operated Version

Strength: Steel base: 4500 pounds ultimate; 3000 pounds working.
Aluminum base: 2000 pounds ultimate; 1500 pounds working.

Steel Base

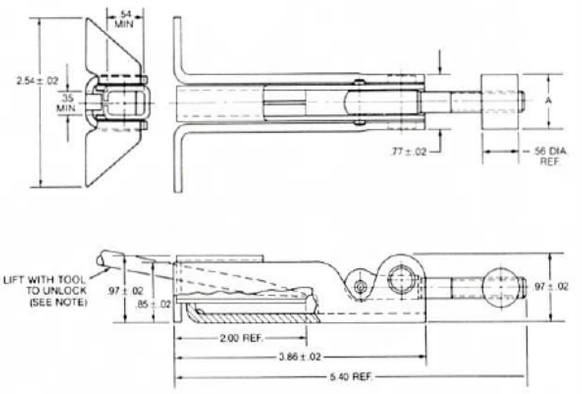

Aluminum Base

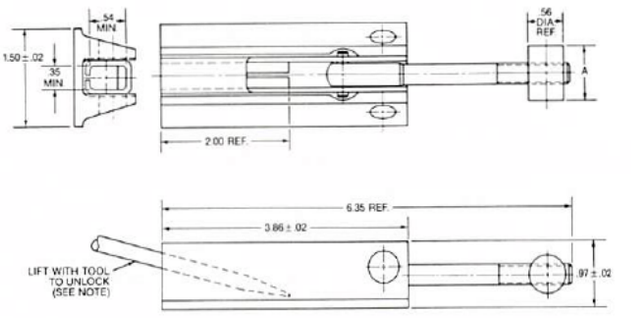

Description	Material		Part No.	Shipping Condition	Mounting Method	A REF.	Weight Per Piece (lbs.)
	Base	Other Components					
Tool Operated	Steel (No Finish)	Steel (Cadmium Plated, Gold Chromate)	37L52-1-1AA	Assembled	Weld	0.81	.49
			37L52-1-2AA	Unassembled			
	Aluminum (No Finish)		37L52-1-2BB				.45
			37L52-2-2BB			1.25	

Note: Use standard cross slot No. 2 blade screwdriver or equivalent as operating tool (not supplied). To open, insert tool as shown and lift to raise handle and unlock latch.

Get quote
Angic Global Solutions 1-888-872-0690
https://www.AngicGlobal.com Sales@AngicGlobal.com

37L33 Series

Secondary Lock Version

Strength: 4500 pounds ultimate; 3000 pounds working.

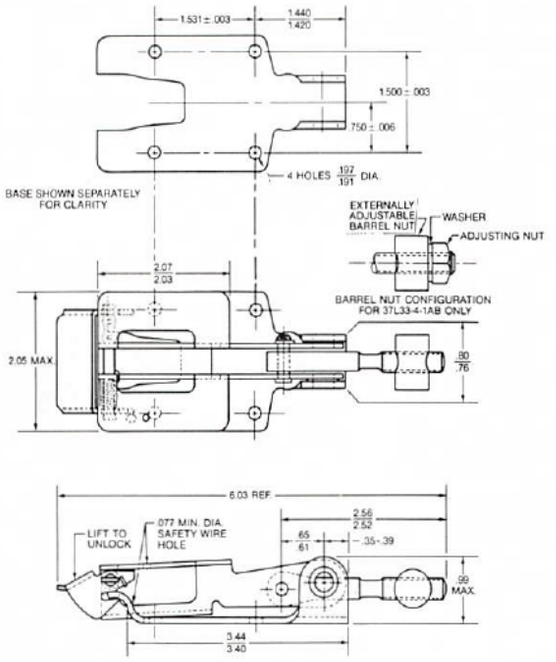

37L22 Series

Two-Position Drawbolt, Short Length

(Two installation positions allow drawbolt to be assembled for maximum take-up or for maximum leverage.)

Strength: 4500 pounds ultimate; 3000 pounds working.

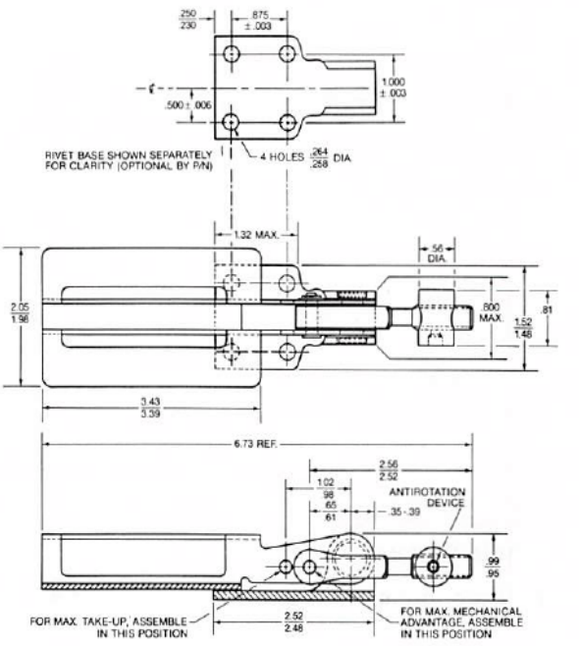

Description	Material		Part No.	Shipping Condition	Mounting Method	Antirotation Device	Weight Per Piece (lbs.)
	Base	Other Components					
Secondary Lock	Steel (Cadmium Plated)	Steel (Cadmium Plated)	37L33-1-1AA	Unassembled	Rivet	None	.42
	Steel (No Finish)		37L33-1-1AB				
			37L33-1-4AB	Assembled			
			37L33-4-1AB	Unassembled			.41
Short Drawbolt, Two-Position Installation		Steel (Cadmium Plated, Olive Drab)	37L22-1-1AC		Weld	Set Screw With Nylon Plug	.46
			37L22-2-1AD		Rivet		.45

Specifications: (For all 37L Series Latches.)

Material: See tables.
Strength: See illustrations.
Operating Action: Over-center.
Adjustment: Threaded drawbolt: .620 inches maximum.
Take-up: Up to 2.00 inches.

H

ANGIC GLOBAL SOLUTIONS Get quote
Angic Global Solutions 1-888-872-0690
https://www.AngicGlobal.com Sales@AngicGlobal.com

37L1 Series

Two-Position Drawbolt, Regular Length

(Two installation positions allow drawbolt to be assembled for maximum take-up or for maximum leverage.)

Strength: Steel base: 4500 pounds ultimate; 3000 pounds working.
Aluminum base: 2000 pounds ultimate; 1500 pounds working.

Steel Base

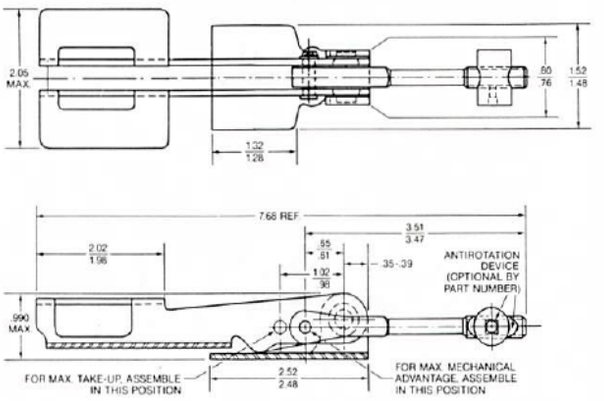

Aluminum Base

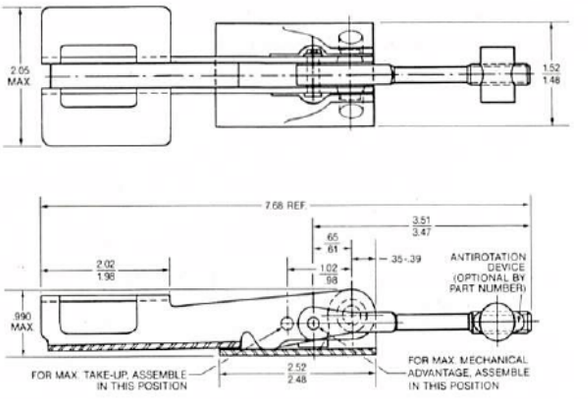

37L11/37L25 Series

Short Handle Version

Strength: Steel base: 4500 pounds ultimate; 3000 pounds working.
Aluminum base: 2000 pounds ultimate; 1500 pounds working.

Steel Base

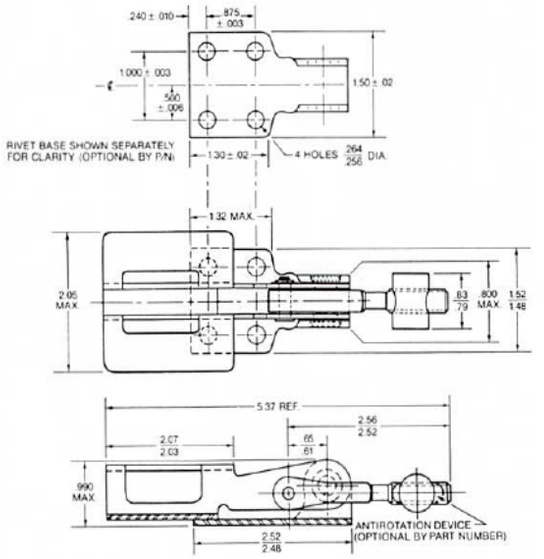

Aluminum Base

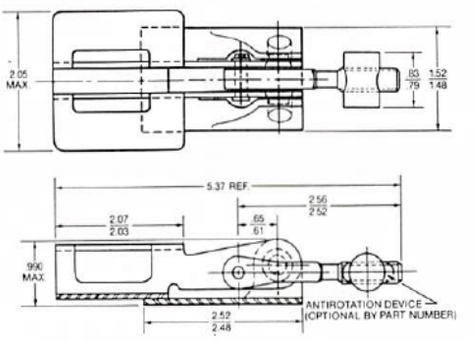

Get quote

Angic Global Solutions 1-888-872-0690
https://www.AngicGlobal.com Sales@AngicGlobal.com

Description	Material		Part No.	Shipping Condition	Mounting Method	Antirotation Device	Weight Per Piece (lbs.)
	Base	Other Components					
Two-Position Drawbolt, Regular Length	Steel (Zinc Plated)	Steel (Cadmium Plated)	37L1-2	Unassembled	Weld	Nylon Patch On Screw Thread	.45
	Aluminum (No Finish)		37L1-1				.40
			37L1-3			Set Screw With Nylon Plug	
		Steel (Chrome Plated)	37L1-5C			None	
Short Handle		Steel (Cadmium Plated)	37L11-2			Nylon Patch On Screw Thread	.35
			37L11-8			None	
	Steel (Zinc Plated)		37L11-1			Nylon Patch On Screw Thread	.40
			37L11-7			None	
	Steel (No Finish)		37L11-1B			Nylon Patch On Screw Thread	
	Steel (Cadmium Plated)		37L25-1-1AA		Rivet		.39

Specifications:

Material: See tables.
Strength: See illustrations.
Operating Action: Over-center.
Adjustment: Threaded drawbolt: .620 inches maximum.
Take-up: Up to 2.00 inches.

Strikes

37L15 Series
Steel Version

Strength:
4500 pounds ultimate;
3000 pounds working.

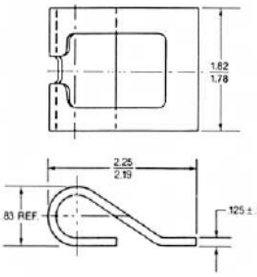

37L14 Series
Aluminum Version

Strength:
2000 pounds ultimate;
1500 pounds working.

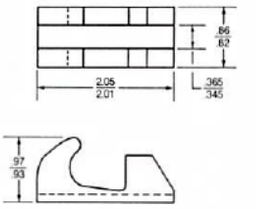

Description	Material	Part No.	Mounting Method	Weight Per Piece (lbs.)
Steel Strike	Steel (Zinc Plated)	37L15-1A	Weld	.17
	Steel (Oil Coated)	37L15-1E		
Aluminum Strike	Aluminum (No Finish)	37L14-1		.05

H

Mechanical Attachment.

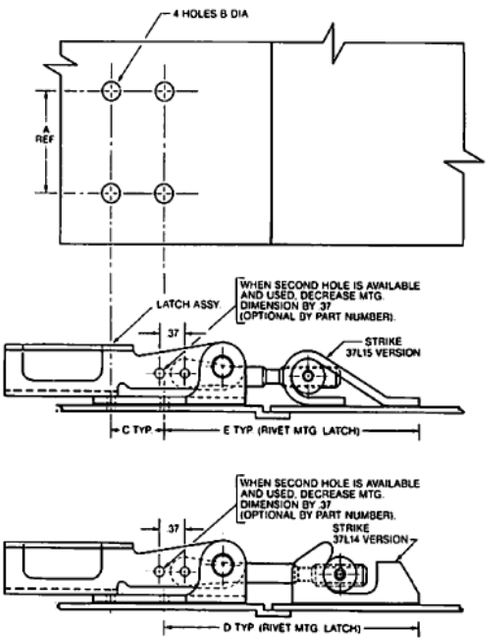

Weld Attachment.

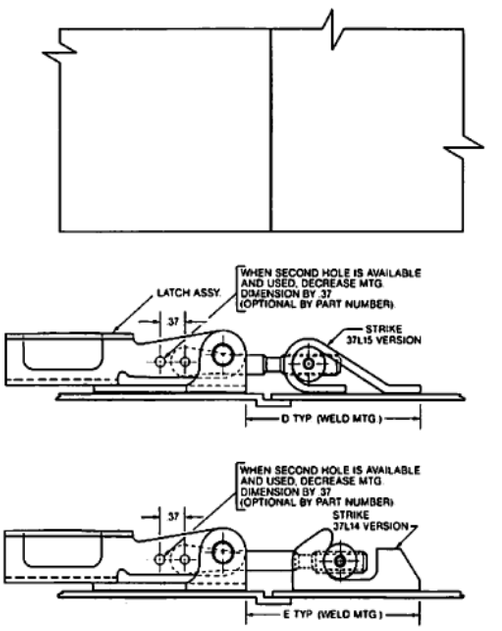

Description	Part No.	A REF.	B DIA. REF.	C REF.	Strike				Attachment Fastener	
					37L15 Series		37L14 Series		Screw Size REF.	Rivet Dia. REF.
					D TYP.	E TYP.	D TYP.	E TYP.		
Tool Operated	37L52-1-1AA	—	—	—	2.86	—	—	2.30	Weld	Weld
	37L52-1-2AA									
	37L52-1-2BB									
	37L52-2-2BB									
Two-Position Drawbolt, Short Length	37L22-1-1AC				2.86 See Note			2.30 See Note		
	37L22-2-1AC	1.000	.250	.875		4.24 See Note	3.68 See Note	—	1/4	1/4
Secondary Lock	37L33-1-1AA	1.500	.190	1.531	—	4.29	3.73	2.30	No. 10	3/16
	37L33-1-1AB									
	37L33-1-4AB									
	37L33-4-1AB						4.38	2.95		
Two-Position Drawbolt, Regular Length	37L1-1	—	—	—	3.82 See Note	—	—	3.26 See Note	Weld	Weld
	37L1-2									
	37L1-3									
	37L1-5C									
Short Handle	37L11-1				2.86	—	—	2.30		
	37L11-2									
	37L11-1B									
	37L11-7				3.42	—	—	2.86		
	37L11-8									
	37L25-1-1AA	1.000	.250	.875	—	4.24	3.68	—	1/4	1/4

Note: Dimension shown applies when drawbolt is assembled in the maximum mechanical advantage hole. Subtract .37 from the dimension if drawbolt is assembled in the maximum take-up hole.

Mechanical Attachment:

1. Locate latch and form 4 "B" Diameter holes.
2. Attach latch with bolts or rivets (see table, not supplied).
3. Locate strike as required and weld in place.

Weld Attachment:

Locate latch and strike as required and weld in place. (See illustrations on following page for correct weld seams.)

Get quote

Angic Global Solutions 1-888-872-0690
https://www.AngicGlobal.com Sales@AngicGlobal.com

Weld Seam Data

(For installation location see illustrations at left.)

Steel Versions

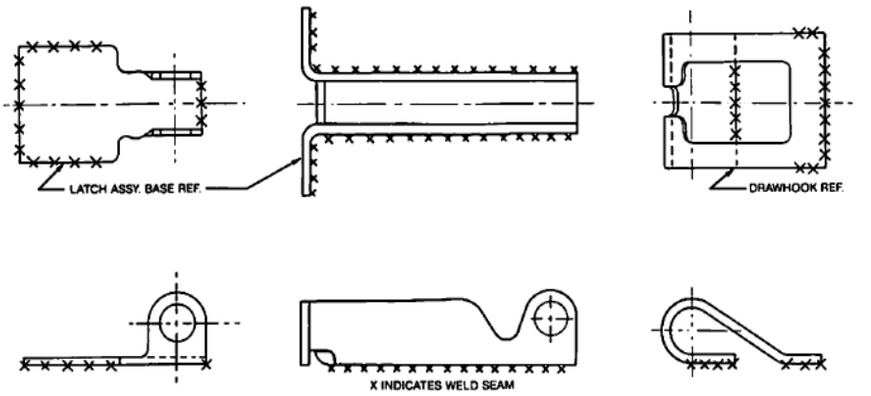

Aluminum Versions

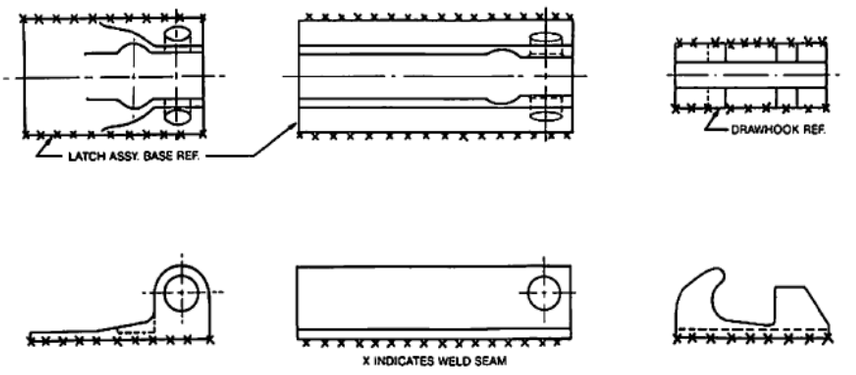

H

Get quote
Angic Global Solutions 1-888-872-0690
https://www.AngicGlobal.com Sales@AngicGlobal.com

Features:

- Scaled-down version of the 37L Series.
- Rugged design.
- Adjustable take-up.
- Weld attachment.

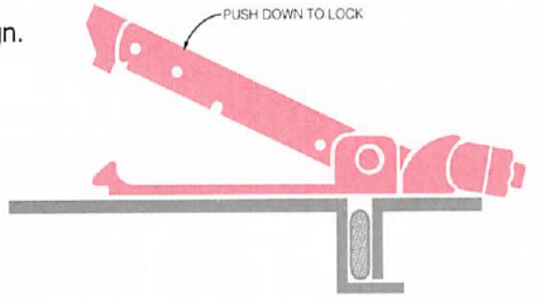

Latch

Part Number: 137L01-1-1AA

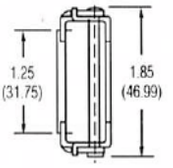

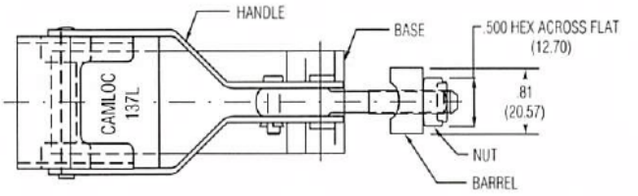

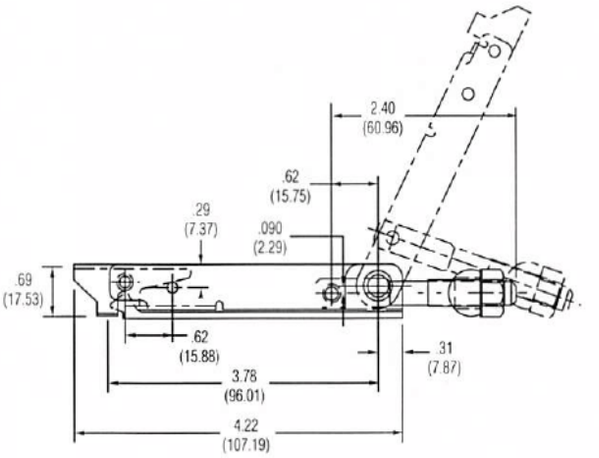

Specifications

Material:
Base: Aluminum
Other Components: Steel
Strength: 2250 pounds ultimate
1500 pounds working
Operation Action: Over-center
Adjustment: Threaded drawbolt: .160 inches maximum (limited by shape of strike)
Take-up: Up to 1.25 inches

Strike

Material: Aluminum Extrusion

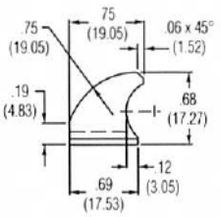

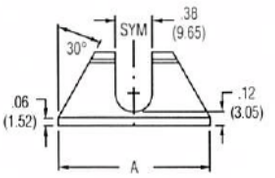

Part Number	"A" Dim.
137L02-2-1AA	1.75

Get quote

Angic Global Solutions 1-888-872-0690
https://www.AngicGlobal.com Sales@AngicGlobal.com

Features:

■ Low Profile. ■ Handle design permits storage of the drawhook within the handle when in the open position. ■ Adjustable threaded drawhook. ■ Under-center toggle geometry insures positive lock-up even with latch and strike mounted on different planes.



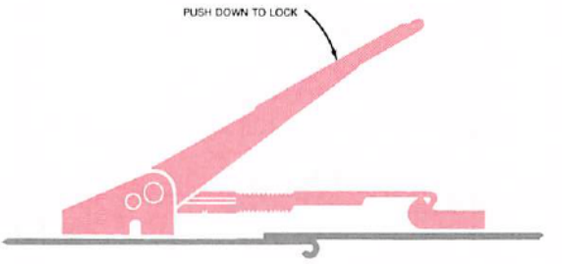

46L Series

Strength: 1000 pounds ultimate; 650 pounds working.

Steel Base Version

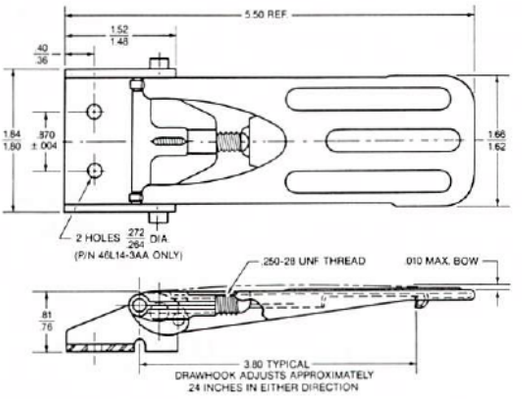

Aluminum Reverse Base Version

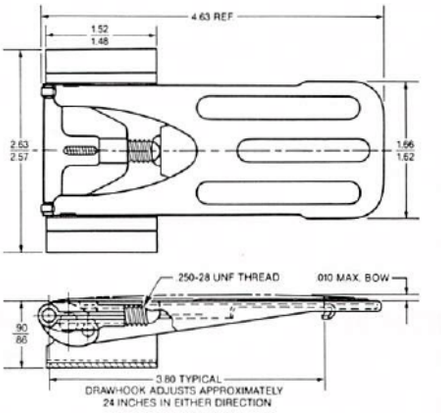

Aluminum Base Version

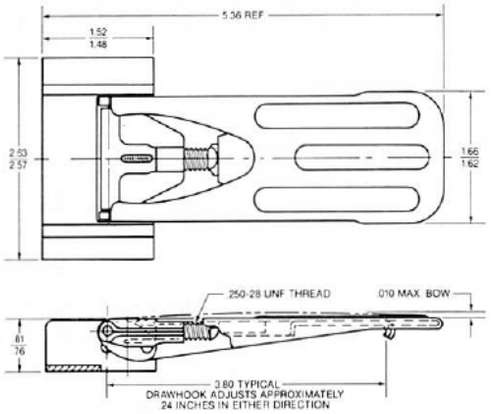

Aluminum Reverse Base Version With Locking Detent

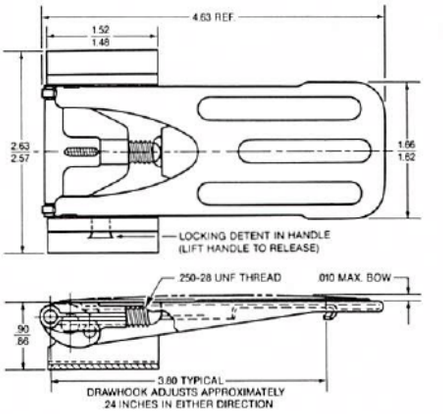

H

ANGIC GLOBAL SOLUTIONS
Get quote
Angic Global Solutions 1-888-872-0690
https://www.AngicGlobal.com Sales@AngicGlobal.com

49L Series (Smooth Handle Version)

Strength: 1000 pounds ultimate; 650 pounds working.

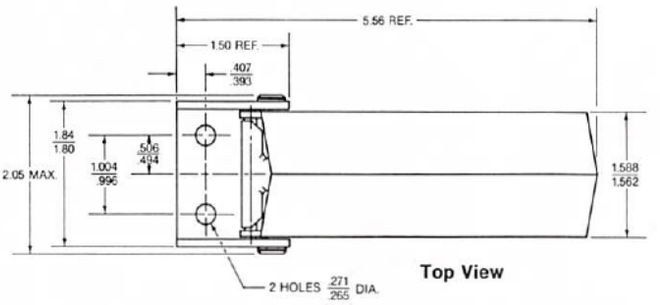

Top View

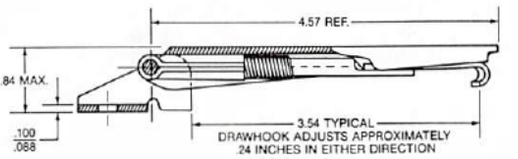

Side View

Description	Material	Part No.	Mounting Method	Weight Per Piece (lbs.)
Steel Base	Lever Assembly: Steel (Cadmium Plated) Base: Steel (Zinc Plated)	46L14-1AA	Weld	0.280
		46L14-3AA	Rivet	
Aluminum Base	Lever Assembly: Steel (Cadmium Plated) Base: Aluminum (No Finish)	46L23-1AA	Weld	0.250
Aluminum Reverse Base	Lever Assembly: Steel (Cadmium Plated, Gold Chromate) Base: Aluminum (No Finish)	46L26-1AA		0.260
	Lever Assembly: Steel (Cadmium Plated, Clear Chromate) Base: Aluminum (No Finish)	46L26-1AB		
Aluminum Reverse Base With Locking Detent	Lever Assembly: Steel (Cadmium Plated, Gold Chromate) Base: Aluminum (No Finish)	46L26-2AA		
Smooth Handle	Handle & Base: Steel (Chrome Plated) Drawhook: Stainless Steel (Passivated)	49L01-1-1AA	Rivet	0.380

Specifications:

Material: See table.

Strength: 1000 pounds ultimate;
650 pounds working.

Operating Action: Under-Center.

Adjustment: Threaded drawhook adjustment up to .480 inches maximum.

Take-up: .380 inches minimum.

Strikes

Weld Mounted/ Steel Version

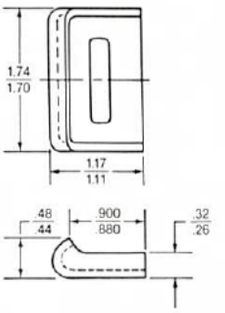

Weld Mounted/ Aluminum Version

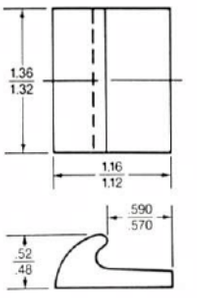

Rivet Mounted/ Steel Version

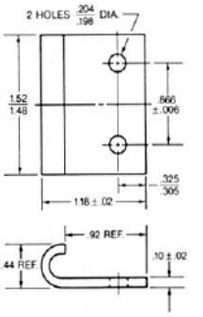

Description	Material	Part No.	Mounting Method	Weight Per Piece (lbs.)
Weld Mounted/ Steel Strike	Steel (Zinc Plated)	46L20-1AA	Weld	0.064
Weld Mounted/ Aluminum Strike	Aluminum (No Finish)	46L20-1BB		0.035
Rivet Mounted/ Steel Strike	Steel (Zinc Plated)	18L13-1-1AA	Rivet	0.060

Get quote

Angic Global Solutions 1-888-872-0690
https://www.AngicGlobal.com Sales@AngicGlobal.com

Panel Preparation and Installation Data.

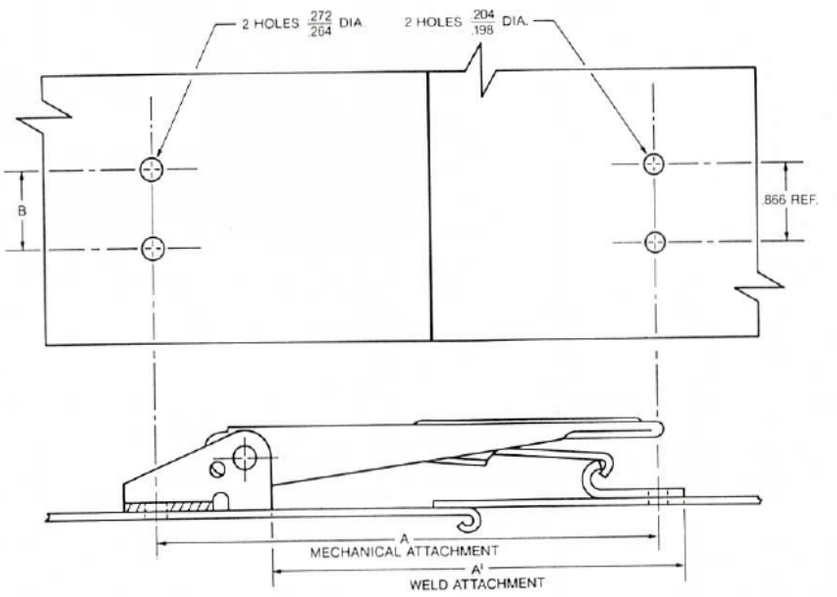

Latch Style	Part No.	Mating Strike Part No.	A Typical	A' Typical	B REF.	Recommended Bolt or Rivet Dia.	
						Latch	Strike
Steel Base Version	46L14-1AA	46L20-1AA	—	4.262	—	Weld	Weld
	46L14-3AA		5.198	—	.870	1/4	
Aluminum Base Version	46L23-1AA	46L20-1BB	—	3.808	—	Weld	
Aluminum Reverse Base Version	46L26-1AA			2.990			
	46L26-1AB						
Aluminum Reverse Base Version With Locking Detent	46L26-2AA						
Smooth Handle Version	49L01-1AA	18L13-1-1AA	5.260	—	1.000	1/4	No. 10 Bolt or 3/16 Rivet

H

Mechanical Attachment:

1. Locate and form holes (see table and illustration).
2. Attach with correct size bolts or rivets (see table, not supplied).

Weld Attachment:

1. Locate latch and strike as required and weld in place.

Get quote
Angic Global Solutions 1-888-872-0690
https://www.AngicGlobal.com Sales@AngicGlobal.com

Features:

■ Handle design permits storage of drawhook within handle. ■ Adjustable threaded drawhook. ■ Under-center toggle geometry insures positive lock-up even with latch and strike mounted on different planes. ■ Short handle version available.



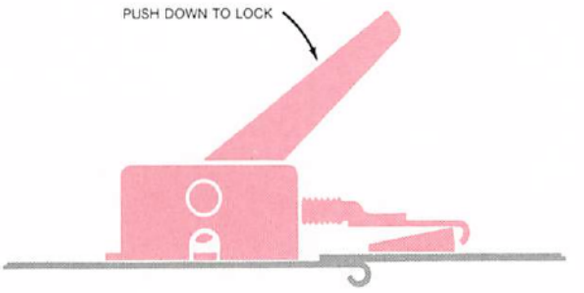

58L Series

Strength: 2250 pounds ultimate; 1500 pounds working.

Basic Version

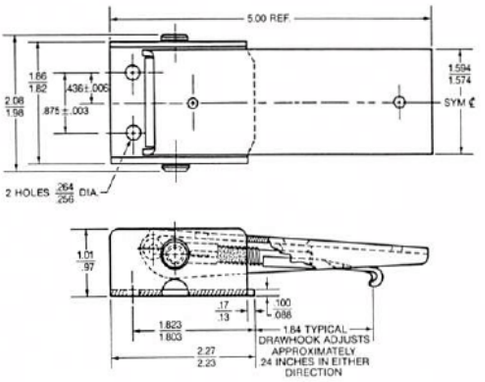

Short Handle Version

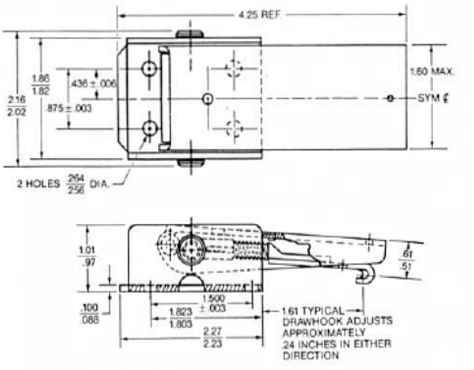

Strike

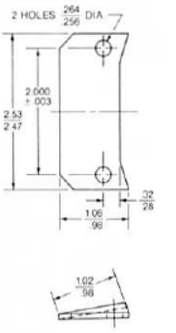

Description	Material	Part No.	Mounting Method	Weight Per Piece (lbs.)
Basic	Steel (Cadmium Plated)	58L1-1-1AA	Rivet	0.59
	Lever Assembly: Steel (Cadmium Plated) Base: Steel (Zinc Plated)	58L1-1-1AB		
	Stainless Steel (Passivated)	58L1-1-1BD		0.60
Short Handle	Steel (Cadmium Plated)	58L3-1-1AA		0.54
Strike	Steel (Cadmium Plated)	58L7-1AA		0.06
	Steel (Nickel Plated)	58L7-1AB		
	Stainless Steel (Passivated)	58L7-1BC		

Specifications:

Material: See table.
Strength: 2250 pounds ultimate; 1500 pounds working.
Operating Action: Under-Center.
Adjustment: Threaded drawhook adjustment up to .480 inches maximum.
Take-up: .400 inches minimum.

Get quote

Angic Global Solutions 1-888-872-0690
https://www.AngicGlobal.com Sales@AngicGlobal.com

Panel Preparation and Installation Data

Basic Version

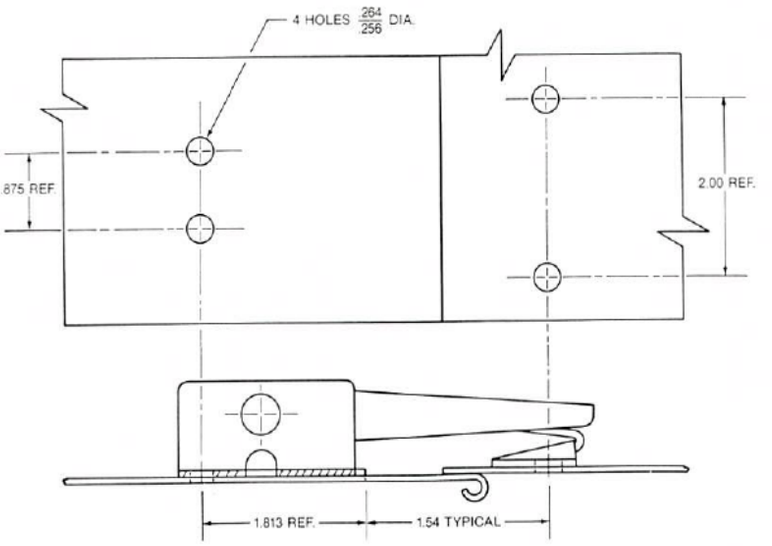

Short Handle Version

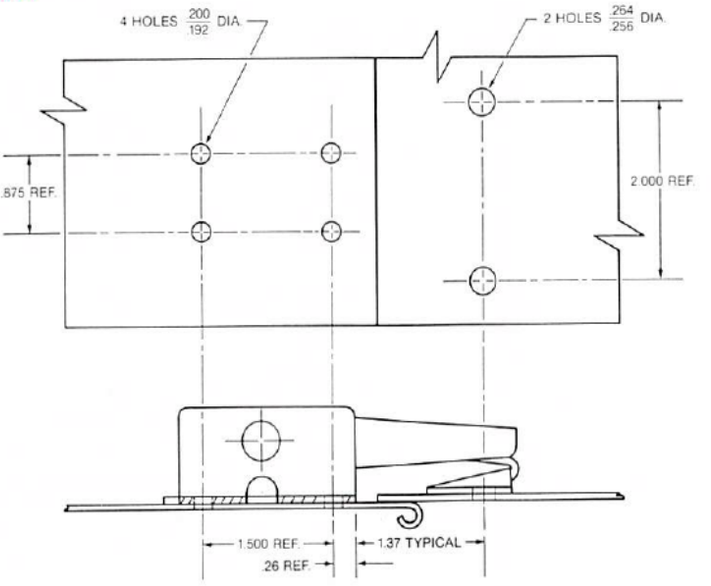

H

Attachment:

1. Locate and form holes (see illustrations).
2. Attach with correct size bolts or rivets, not supplied (see table).

Description	Part No.	Recommended Bolt or Rivet Dia.
Basic Latch	58L1-1-1AA	1/4
	58L1-1-1AB	
	58L1-1-1BD	
Short Handle Latch	58L3-1-1AA	No. 10 Bolt or 3/16 Rivet
Strike	58L7-1AA	1/4
	58L7-1AB	
	58L7-1BC	

Get quote
Angic Global Solutions 1-888-872-0690
https://www.AngicGlobal.com Sales@AngicGlobal.com

Camloc Pawl latches are designed to secure hinged panels. They have a rotatable actuator on which a radially projecting pawl is connected. The shaft is mounted through the panel, and the pawl engages the frame member.

Two pawl styles are available: wire-form, that is pre-set (use adjustment nut if available) for a desired clamping force, and solid arm type with a continuously adjustable pawl, which moves axially when the shaft is rotated.

Camloc Pawl latches are easy to install and accommodate a large grip range. They provide an easy way to specify a reliable, low installed cost door latch to a product.

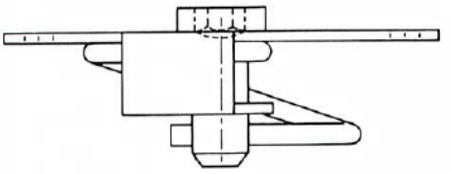

Typical Wire-Form Pawl Latch

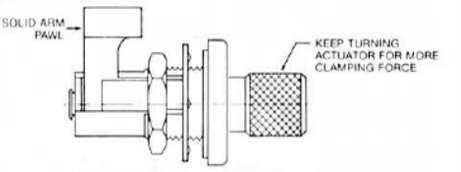

Typical Solid Arm Pawl Latch

Solid arm pawl latches can apply higher compression loads for use with gaskets or when tight lock-down of panel to frame is required.

Typical Actuator Styles:

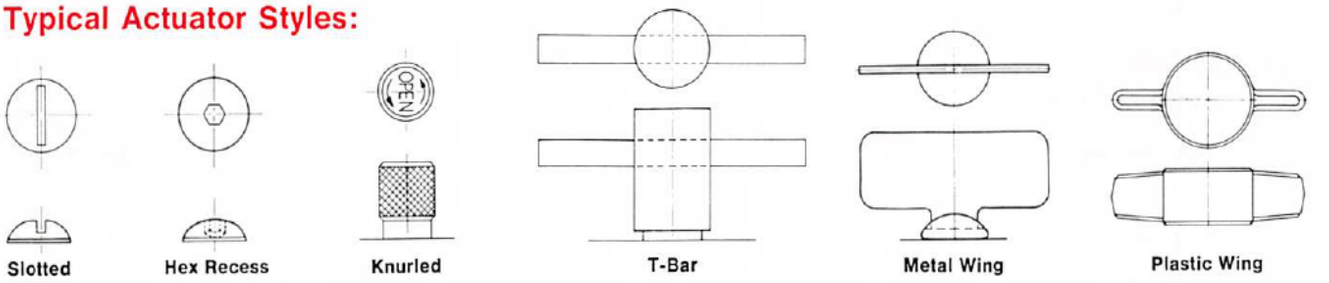

Slotted | Hex Recess | Knurled | T-Bar | Metal Wing | Plastic Wing

Latches are shown actual size. Illustrations are typical only, and size may vary by part numbers.

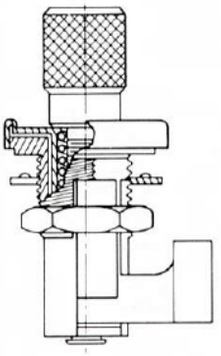

65L Series

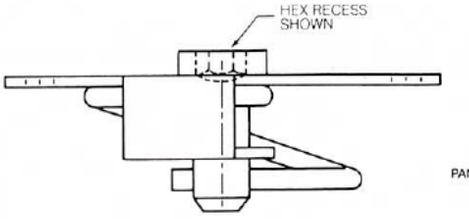

106L Series

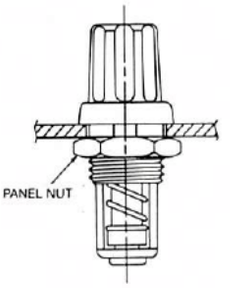

122L/123L Series

Series Number	Page Number	Specifications			Actuator Styles		Installation Method		
		Grip (inches)	Pawl Type	Locking Rotation	Tool Operated	Hand Operated	Mechanical Mounting Version	Weld-on Mounting Version	Single Hole Mounting Version
64L	H-44 - H-45	.600 MAX	Wire	Clockwise	•	•			•
65L	H-46 - H-47	.740 MAX.	Solid	Clockwise & Counter-Clockwise		•			•
106L	H-48 - H-51	.370 MAX.	Wire	Clockwise	•	•	•	•	
122L/123L	H-52 - H-55		Solid	Clockwise	•	•	•		•

● = Illustrated in catalog.

H

Features:

- Adjustable for desired clamping load. ■ Single hole mounting.
- Various actuator styles for tool or hand operation. ■ All latches shipped unassembled.



Plastic Wing Actuator Shown

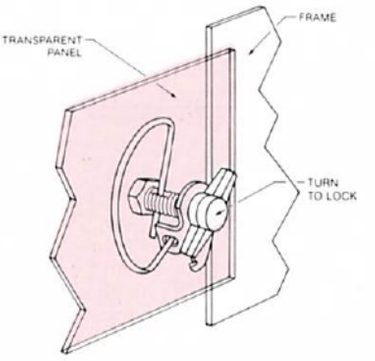

64L Series

Grip Range: .600 inches maximum.

Slotted Version

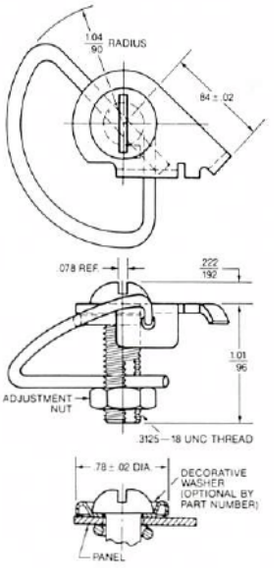

Hex Recess Version

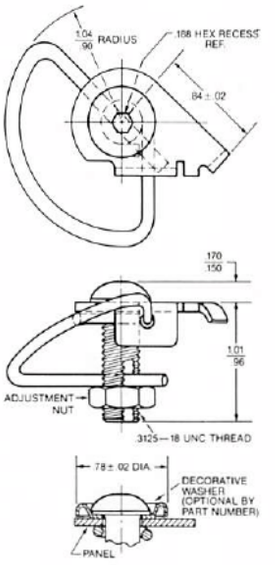

Wing Version

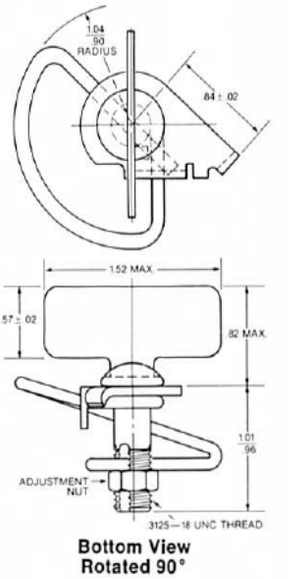

Bottom View Rotated 90°

Plastic Wing Version

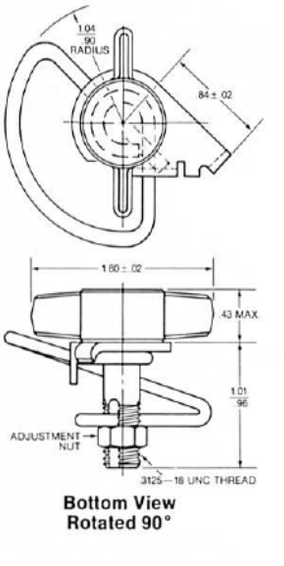

Bottom View Rotated 90°

Description	Material[1,2]	Part No.	Weight Per Piece (lbs.)
Slotted	Steel (Cadmium Plated, Clear Chromate)	64L10-32-1AA	.056
Slotted With Decorative Washer		64L10-32-2AA[1]	.061
Hex Recess		64L1-32-1AA	.054
Hex Recess With Decorative Washer		64L9-32-1AA[1]	.058
Wing		64L11-32-1AA	.074
Plastic Wing		64L19-32-1AA[2]	.054

Notes: 1. P/N's 64L10-32-2AA and 64L9-32-1AA decorative washer material: steel (chromium plated).
2. P/N 64L19-32-1AA actuator knob material: black acetal homopolymer.
3. All latches shipped unassembled.

Get quote
Angic Global Solutions 1-888-872-0690
https://www.AngicGlobal.com Sales@AngicGlobal.com

Panel Preparation, Assembly and Installation Data.

Panel Preparation

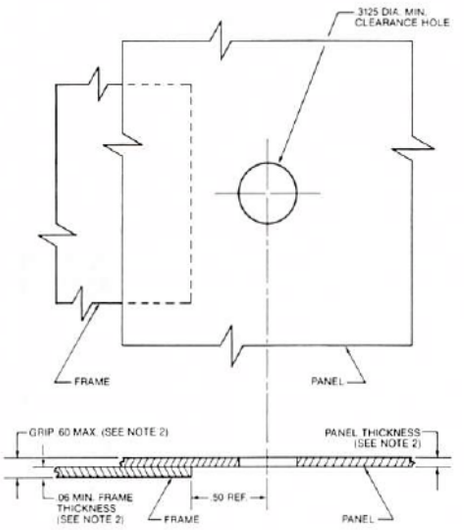

Notes:

1. Locate and form .3125 Dia. Min. hole.
2. Grip = panel thickness + frame thickness. Grip not to exceed .600 inches.

Assembly & Installation

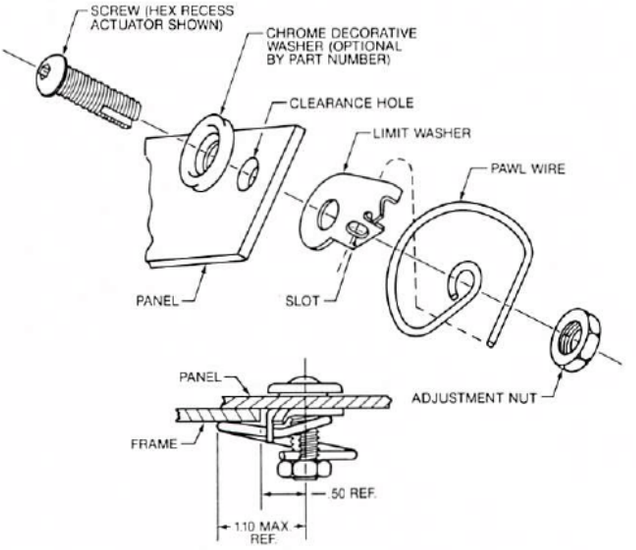

Pawl Latch Installed

Notes:

1. Feed open end of pawl wire through slot in limit washer and rotate counter-clockwise until stopped by loop end.
2. Feed screw through decorative washer (optional), panel hole and subassembly of limit washer/pawl wire.
3. Fasten nut on screw to complete assembly in panel.

Operating Instructions

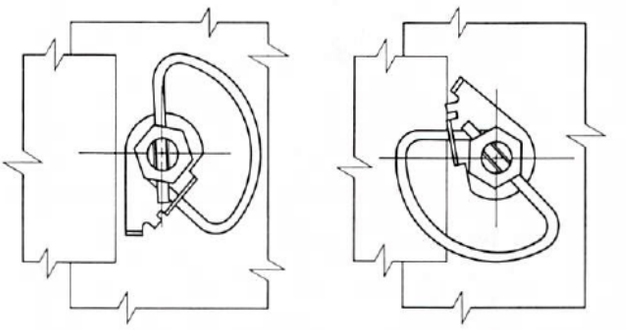

Unlocked Position Bottom View

Locked Position Bottom View

Notes:

1. To unlock latch, turn screw approximately 250° counter-clockwise; to lock latch, turn clockwise until limit washer butts against the frame.
2. Lock up torque and clamping force may vary over the grip range. Turn adjustment nut as desired: clockwise to increase lock-up torque and clamping force; counterclockwise to decrease lock-up torque and clamping force.

H

Get quote
Angic Global Solutions 1-888-872-0690
https://www.AngicGlobal.com Sales@AngicGlobal.com

FULLY ADJUSTABLE PAWL LATCH 65L SERIES

Features:

- Adjustment compensates for varying panel and frame thicknesses.
- Single hole mounting for quick installation. ■ May be installed to rotate right or left for lock-up.
- Built-in pawl position indicator.



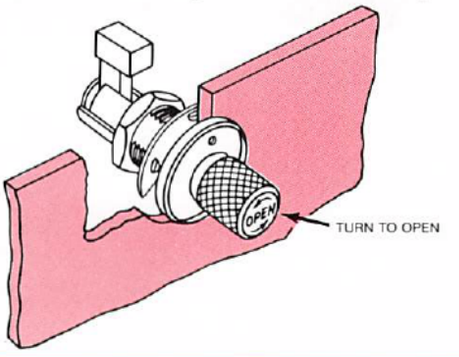

Clockwise Locking Rotation
.480/.040 Grip Range

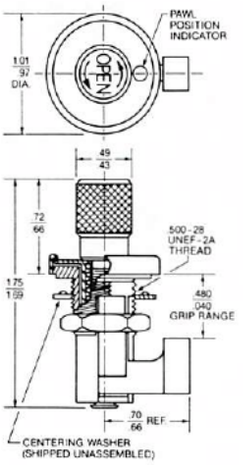

Clockwise Locking Rotation
.740/.300 Grip Range

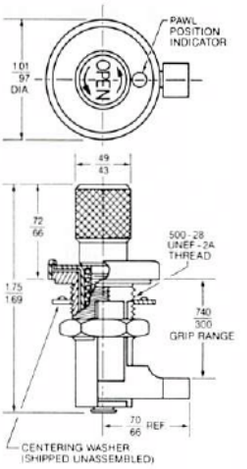

Counterclockwise Locking Rotation
.480/.040 Grip Range

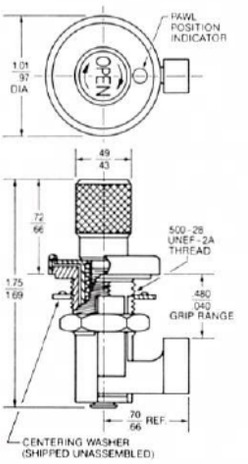

Counterclockwise Locking Rotation
.740/.300 Grip Range

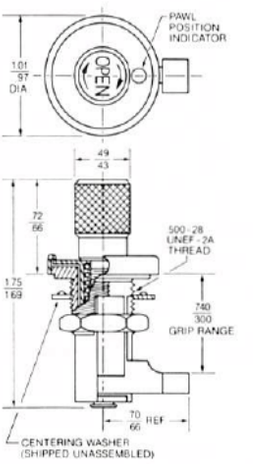

Description		Material			Part No.	Weight Per Piece (lbs.)
Locking Rotation	Grip Range	Housing	Pawl	Knob & Washer		
Clockwise	.480/.040	Zinc (Cadmium Plated)	Aluminum (Anodized)	Steel (Cadmium Plated, Yellow Iridescent Chromate)	65L1-1R1AA	.077
	.740/.300				65L1-2R1AA	.076
	.480/.040			Steel (Cadmium Plated, Clear Chromate)	65L1-1R1AB	.077
	.740/.300				65L1-2R1AB	.076
Counterclockwise	.480/.040			Steel (Cadmium Plated, Yellow Iridescent Chromate)	65L1-1L1AA	.077
	.740/.300				65L1-2L1AA	.076
	.480/.040			Steel (Cadmium Plated, Clear Chromate)	65L1-1L1AB	.077
	.740/.300				65L1-2L1AB	.076

ANGIC GLOBAL SOLUTIONS
Get quote
Angic Global Solutions 1-888-872-0690
https://www.AngicGlobal.com Sales@AngicGlobal.com

Centering Washer

Shipped unassembled with each pawl latch.

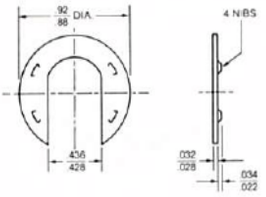

Material	Part No.	Weight Per Piece (lbs.)
Steel (Cadmium Plated, Gold Chromate)	65L4-1AA	.003

Panel Preparation and Installation Data

Clockwise (Right Hand) Locking:

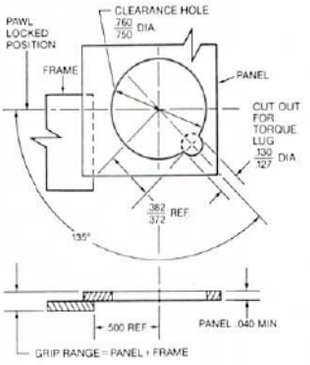

Counterclockwise (Left Hand) Locking:

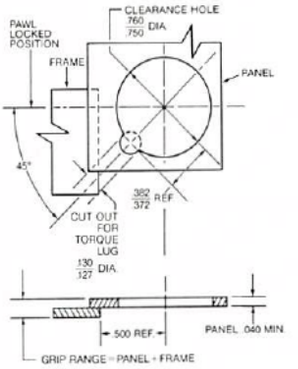

Installation Procedure:

1. Locate and form clearance hole $\frac{.760}{.750}$ Diameter Reference.
2. **For clockwise (right hand) locking:** locate torque lug cut out in panel 135° counterclockwise from desired pawl position when locked. Form torque lug cut out $\frac{.130}{.127}$ Diameter Reference.
3. **For counterclockwise (left hand) locking:** locate torque lug cut out in panel 45° counterclockwise from desired pawl position when locked. Form torque lug cut out $\frac{.130}{.127}$ Diameter Reference.
4. Position pawl in extreme open position and insert pawl end into mounting hole.
5. Push entire latch through hole, taking care to position torque lug in cut out.
6. Slip centering washer over flats on threaded housing. Be sure that nibs on washer penetrate mounting hole to accomplish centering.
7. Tighten hex nut.

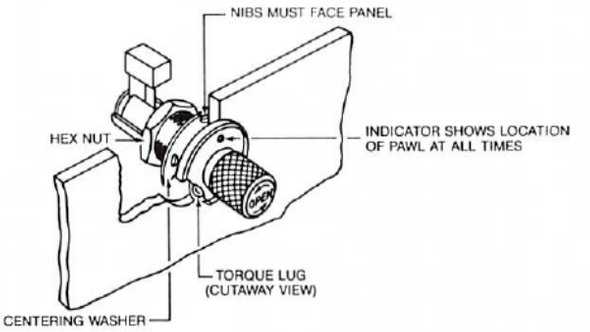

To Operate:

1. Rotate actuator knob 1/4-turn to lock. Keep rotating actuator to increase clamping force.
2. To unlock, rotate actuator 1/4-turn in opposite direction.

H

ANGIC GLOBAL SOLUTIONS
Get quote
Angic Global Solutions 1-888-872-0690
https://www.AngicGlobal.com Sales@AngicGlobal.com

LOW COST PAWL LATCHES 106L SERIES

Features:

- Many actuator styles. ■ Weld-on or mechanical attachment.
- Many materials and finishes to choose from. ■ Smooth and serrated pawls available.



Slotted Actuator
(Hex Recess Available)

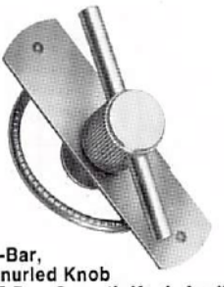

T-Bar,
Knurled Knob
(T-Bar, Smooth Knob Available)



Knurled Actuator
Without T-Bar

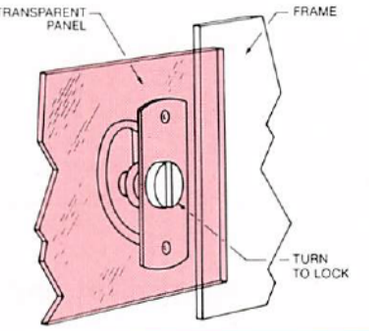

Grip Range: $\frac{.37}{.06}$ inches

Slotted Version

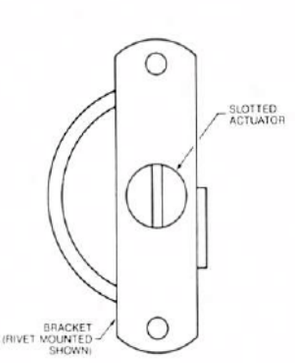

Top View

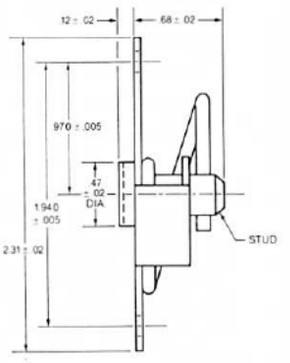

Side View

Hex Recess Version

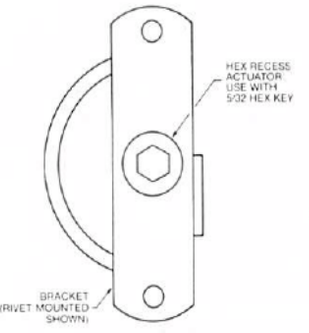

Top View

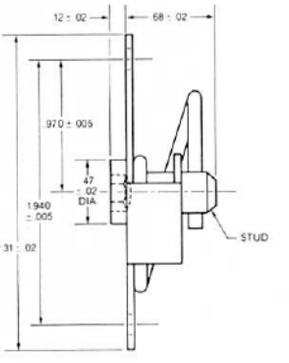

Side View

Knurled Version

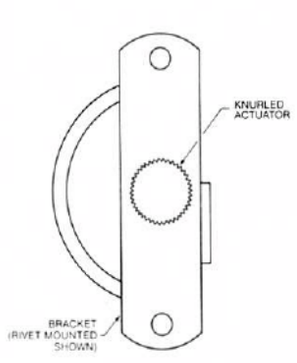

Top View

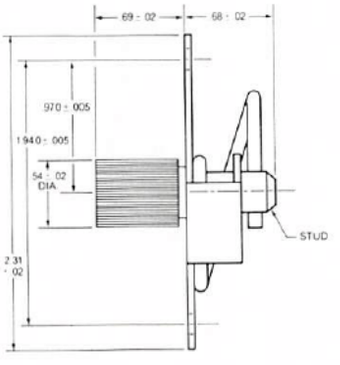

Side View

T-Bar Version

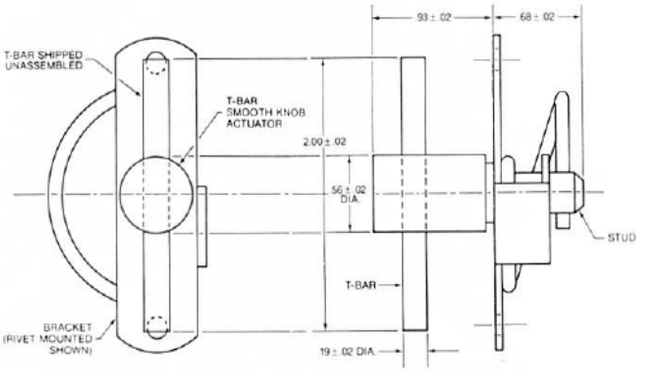

Top View

Side View

Get quote

Angic Global Solutions 1-888-872-0690
https://www.AngicGlobal.com Sales@AngicGlobal.com

T-Bar, Knurled Version

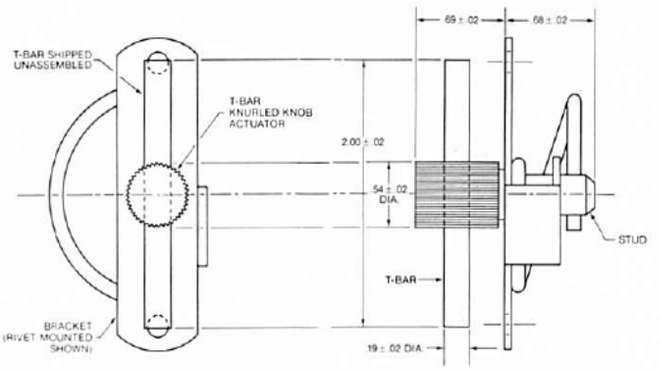

Top View Side View

Bottom View (Typical)

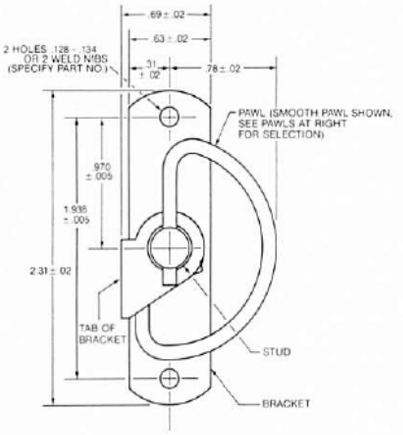

Pawls

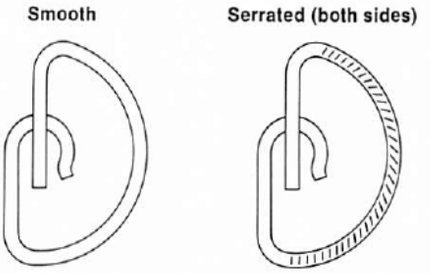

Bottom Views

Serrated pawls are used when additional gripping of frame is required.

Description	Material			Part No.	Pawl Style	Mounting Method	Weight Per Piece (lbs.)
	Stud	Bracket	Pawl				
Slotted	Steel (Zinc Plated)	Steel (Zinc Plated)	Stainless Steel (Passivated)	106L01-1-1AA	Smooth	Rivet	.056
				106L01-1-2AA	Serrated		
	Steel (Black Phosphate, Oil Dip)			106L01-1-1AD	Smooth		
				106L01-1-2AD	Serrated		
	Stainless Steel (Passivated)	Stainless Steel (Passivated)		106L01-1-1BC	Smooth		
				106L01-1-2BC	Serrated		
	Steel (Zinc Plated)	Steel (Flash Copper Plated)		106L01-1-3AB	Smooth	Weld	
				106L01-1-4AB	Serrated		
	Steel (Black Phosphate, Oil Dip)			106L01-1-3AE	Smooth		
				106L01-1-4AE	Serrated		
	Stainless Steel (Passivated)	Stainless Steel (Passivated)		106L01-1-3BC	Smooth		
				106L01-1-4BC	Serrated		

H

Get quote
Angic Global Solutions 1-888-872-0690
https://www.AngicGlobal.com Sales@AngicGlobal.com

LOW COST PAWL LATCHES 106L SERIES

Description	Material			Part No.	Pawl Style	Mounting Method
	Stud	Bracket	Pawl			
Hex Recess	Steel (Zinc Plated)	Steel (Zinc Plated)	Stainless Steel (Passivated)	106L01-3-1AA	Smooth	Rivet
				106L01-3-2AA	Serrated	
	Steel (Black Phosphate, Oil Dip)			106L01-3-1AD	Smooth	
				106L01-3-2AD	Serrated	
	Stainless Steel (Passivated)	Stainless Steel (Passivated)		106L01-3-1BC	Smooth	
				106L01-3-2BC	Serrated	
	Steel (Zinc Plated)	Steel (Flash Copper Plated)		106L01-3-3AB	Smooth	Weld
				106L01-3-4AB	Serrated	
	Steel (Black Phosphate, Oil Dip)			106L01-3-3AE	Smooth	
				106L01-3-4AE	Serrated	
	Stainless Steel (Passivated)	Stainless Steel (Passivated)		106L01-3-3BC	Smooth	
				106L01-3-4BC	Serrated	
Knurled	Steel (Zinc Plated)	Steel (Zinc Plated)	Stainless Steel (Passivated)	106L01-4-1AA	Smooth	Rivet
				106L01-4-2AA	Serrated	
	Steel (Black Phosphate, Oil Dip)			106L01-4-1AD	Smooth	
				106L01-4-2AD	Serrated	
	Stainless Steel (Passivated)	Stainless Steel (Passivated)		106L01-4-1BC	Smooth	
				106L01-4-2BC	Serrated	
	Steel (Zinc Plated)	Steel (Flash Copper Plated)		106L01-4-3AB	Smooth	Weld
				106L01-4-4AB	Serrated	
	Steel (Black Phosphate, Oil Dip)			106L01-4-3AE	Smooth	
				106L01-4-4AE	Serrated	
	Stainless Steel (Passivated)	Stainless Steel (Passivated)		106L01-4-3BC	Smooth	
				106L01-4-4BC	Serrated	

Panel Preparation and Installation Data

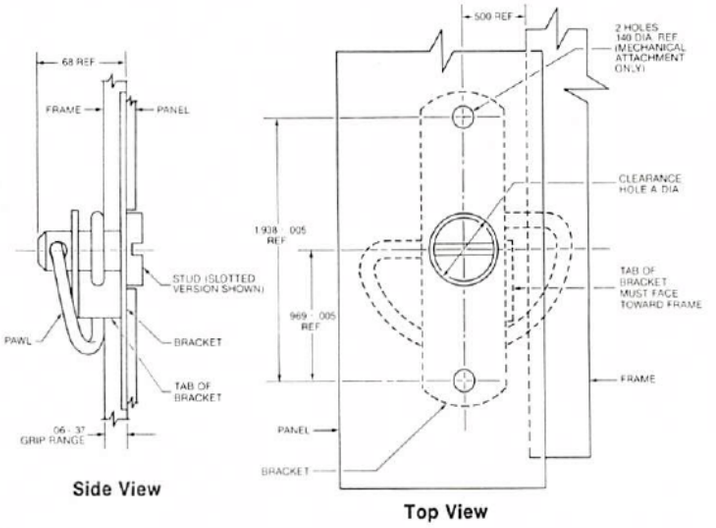

Head Style	Basic Part No.	Clearance Hole A DIA.
Slotted	106L01-1	.50 MIN.
Hex Recess	106L01-3	.40 MIN.
Knurled	106L01-4	.56 MIN.
T-Bar	106L01-2	.56 MIN.
T-Bar Knurled	106L01-5	.56 MIN.

Get quote
Angic Global Solutions 1-888-872-0690
https://www.AngicGlobal.com Sales@AngicGlobal.com

Description	Material				Part No.	Pawl Style	Mounting Method
	Stud	Bracket	Pawl	T-Bar			
T-Bar, Smooth Knob	Steel (Zinc Plated)	Steel (Zinc Plated)	Stainless Steel (Passivated)	Steel (Zinc Plated)	106L01-2-1AA	Smooth	Rivet
					106L01-2-2AA	Serrated	
	Steel (Black Phosphate, Oil Dip)			Steel (Black Phosphate, Oil Dip)	106L01-2-1AD	Smooth	
					106L01-2-2AD	Serrated	
	Stainless Steel (Passivated)	Stainless Steel (Passivated)		Stainless Steel (Passivated)	106L01-2-1BC	Smooth	
					106L01-2-2BC	Serrated	
	Steel (Zinc Plated)	Steel (Flash Copper Plated)		Steel (Zinc Plated)	106L01-2-3AB	Smooth	Weld
					106L01-2-4AB	Serrated	
	Steel (Black Phosphate, Oil Dip)			Steel (Black Phosphate, Oil Dip)	106L01-2-3AE	Smooth	
					106L01-2-4AE	Serrated	
	Stainless Steel (Passivated)	Stainless Steel (Passivated)		Stainless Steel (Passivated)	106L01-2-3BC	Smooth	
					106L01-2-4BC	Serrated	
T-Bar, Knurled Knob	Steel (Zinc Plated)	Steel (Zinc Plated)	Stainless Steel (Passivated)	Steel (Zinc Plated)	106L01-5-1AA	Smooth	Rivet
					106L01-5-2AA	Serrated	
	Steel (Black Phosphate, Oil Dip)			Steel (Black Phosphate, Oil Dip)	106L01-5-1AD	Smooth	
					106L01-5-2AD	Serrated	
	Stainless Steel (Passivated)	Stainless Steel (Passivated)		Stainless Steel (Passivated)	106L01-5-1BC	Smooth	
					106L01-5-2BC	Serrated	
	Steel (Zinc Plated)	Steel (Flash Copper Plated)		Steel (Zinc Plated)	106L01-5-3AB	Smooth	Weld
					106L01-5-4AB	Serrated	
	Steel (Black Phosphate, Oil Dip)			Steel (Black Phosphate, Oil Dip)	106L01-5-3AE	Smooth	
					106L01-5-4AE	Serrated	
	Stainless Steel (Passivated)	Stainless Steel (Passivated)		Stainless Steel (Passivated)	106L01-5-3BC	Smooth	
					106L01-5-4BC	Serrated	

Mechanical Attachment:

1. Locate and form 2 holes .140 Dia. Ref. and clearance hole per table (see table and illustration).
2. Pass knob through clearance hole from back side of panel.
3. Attach with No. 6 screw or .125 diameter rivet (not supplied).

   Note: Make sure tab of bracket faces toward frame (see illustration).
4. For T-Bar Versions, insert T-Bar through hole in knob after latch has been installed (T-Bar must be pressed into position and centered on knob).

Weld Attachment:

1. Locate and form clearance hole per table (see table and illustration).
2. Pass knob through center hole from back side of panel.
3. Locate latch as required and weld in place.

   Note: Make sure tab of bracket faces toward frame (see illustration).
4. For T-Bar Versions, insert T-Bar through hole in knob after latch has been installed (T-Bar must be pressed into position and centered on knob).

H

Get quote

Angic Global Solutions 1-888-872-0690
https://www.AngicGlobal.com Sales@AngicGlobal.com

MINIATURE PAWL LATCHES 122L and 123L SERIES

Features:

- Compress metalized gaskets for RFI/EMI protection.
- Snap-in and Panel Nut versions with three head styles for each version: Hex Recess, Slotted and Hand-Operated Knob.
- Full line to suit virtually any application. Snap-in models for use with three different panel thicknesses; each providing three different grip ranges. Panel Nut version accommodates wide range of panel thicknesses.

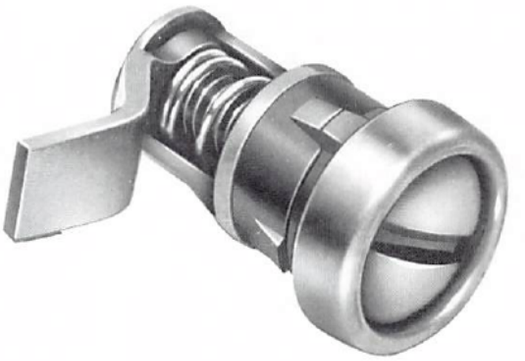

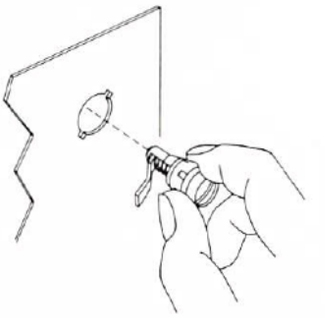

Quick Installation

Slotted Head, Snap-in Version Shown

Pawl adjusts to almost any frame thickness with just a few turns.

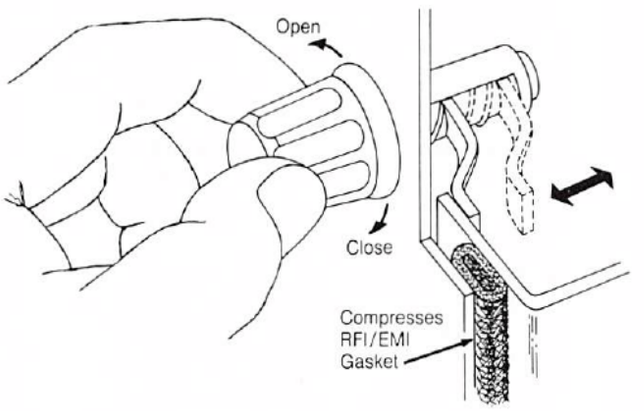

Three grip ranges available in each series; determined by pre-assembled pawl position.

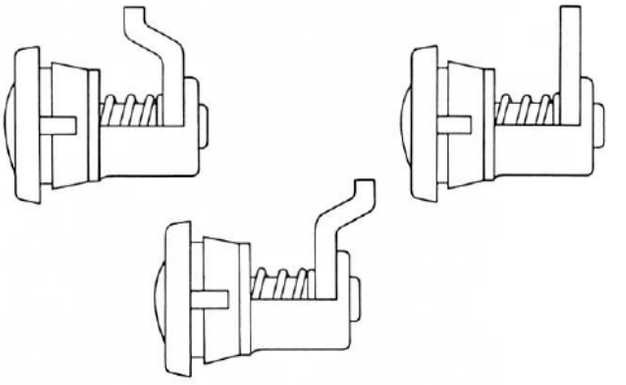

Head Styles Available:

- Fluted Hand-Operated Knob
- Hex Recess
- Slotted Head

Finishes Available:

- Bright Chrome
- Black Matte
- Zinc Plate

Typical Applications:

Allows quick access to electronics while assuring a firm seal on closed doors and panels.

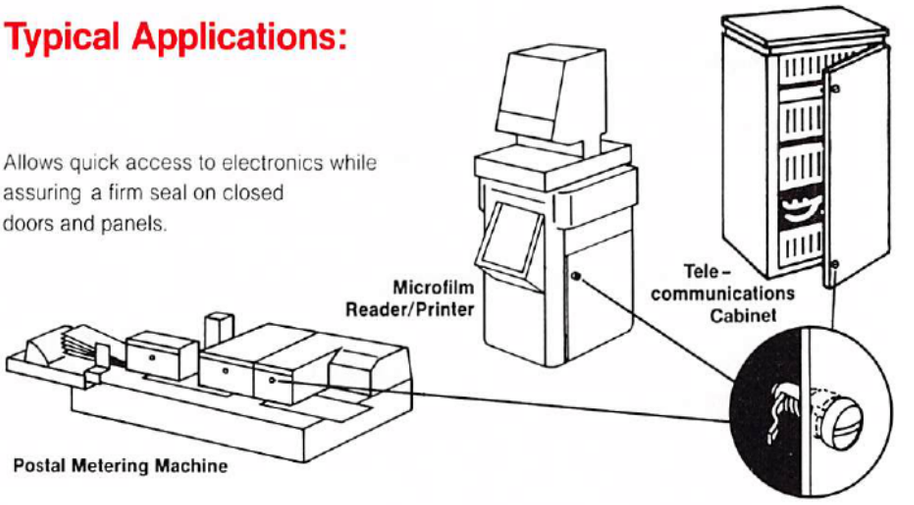

Get quote

Angic Global Solutions 1-888-872-0690
https://www.AngicGlobal.com Sales@AngicGlobal.com

Snap-in Version

Cut-away View, Typical

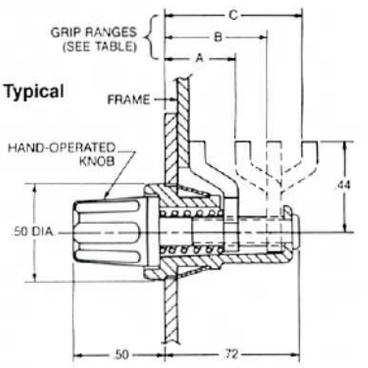

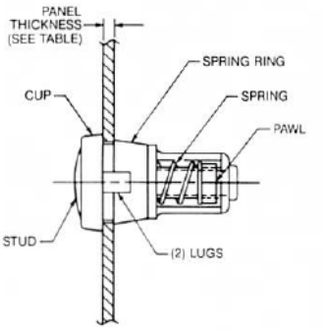

Panel Thickness	Pawl Type	Grip Range	3mm Hex Recess Head Part No.	Slotted Head Part No.	Hand-operated Knob Part No.
.064 Max. / .058 Min.	A	.118 - .320	122L01-1-1[ ]	122L02-1-1[ ]	122L03-1-1[ ]
	B	.310 - .530	122L01-1-2[ ]	122L02-1-2[ ]	122L03-1-2[ ]
	C	.520 - .700	122L01-1-3[ ]	122L02-1-3[ ]	122L03-1-3[ ]
.094 Max. / .088 Min.	A	.118 - .320	122L01-2-1[ ]	122L02-2-1[ ]	122L03-2-1[ ]
	B	.310 - .530	122L01-2-2[ ]	122L02-2-2[ ]	122L03-2-2[ ]
	C	.520 - .700	122L01-2-3[ ]	122L02-2-3[ ]	122L03-2-3[ ]
.125 Max. / .119 Min.	A	.118 - .320	122L01-3-1[ ]	122L02-3-1[ ]	122L03-3-1[ ]
	B	.310 - .530	122L01-3-2[ ]	122L02-3-2[ ]	122L03-3-2[ ]
	C	.520 - .700	122L01-3-3[ ]	122L02-3-3[ ]	122L03-3-3[ ]

▲ ▲ ▲

Add suffix for desired finish to complete part number. See bottom of Page F-60

Panel Nut Version

All dimensions the same as snap-in version above.

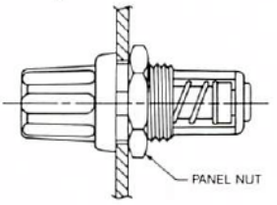

Panel Thickness	Pawl Type	Grip Range	3mm Hex Recess Head Part No.	Slotted Head Part No.	Hand-operated Knob Part No.
.160 Max. / .055 Min.	A	.118 - .320	122L11-1-1[ ]	122L12-1-1[ ]	122L13-1-1[ ]
	B	.310 - .530	122L11-1-2[ ]	122L12-1-2[ ]	122L13-1-2[ ]
	C	.520 - .700	122L11-1-3[ ]	122L12-1-3[ ]	122L13-1-3[ ]

▲ ▲ ▲

Add suffix for desired finish to complete part number. See bottom of Page F-60

H

Materials:

Stud: Low Carbon Steel
Cup: Zinc Casting
Pawl: Carbon Steel
Spring Ring: Spring Steel
Panel Nut: Brass
Spring: CRES Wire
Knob: Black Plastic

ANGIC GLOBAL SOLUTIONS Get quote
Angic Global Solutions 1-888-872-0690
https://www.AngicGlobal.com Sales@AngicGlobal.com

Snap-in Version

Cut-away View, Typical

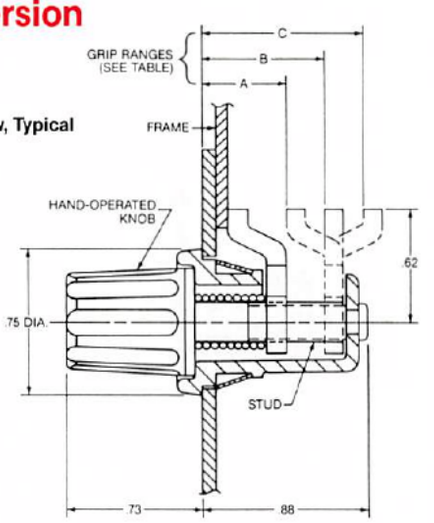

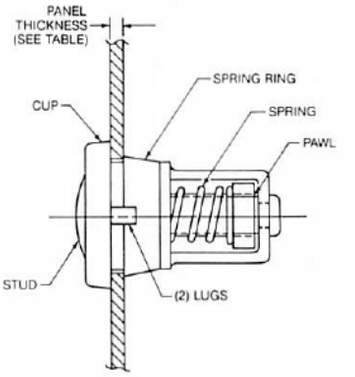

Panel Thickness	Pawl Type	Grip Range	4mm Hex Recess Head Part No.	Slotted Head Part No.	Hand-operated Knob Part No.
.064 Max. / .058 Min.	A	.118 - .403	123L01-1-1[ ]	123L02-1-1[ ]	123L03-1-1[ ]
	B	.340 - .640	123L01-1-2[ ]	123L02-1-2[ ]	123L03-1-2[ ]
	C	.555 - .855	123L01-1-3[ ]	123L02-1-3[ ]	123L03-1-3[ ]
.094 Max. / .088 Min.	A	.118 - .403	123L01-2-1[ ]	123L02-2-1[ ]	123L03-2-1[ ]
	B	.340 - .640	123L01-2-2[ ]	123L02-2-2[ ]	123L03-2-2[ ]
	C	.555 - .855	123L01-2-3[ ]	123L02-2-3[ ]	123L03-2-3[ ]
.125 Max. / .119 Min.	A	.118 - .403	123L01-3-1[ ]	123L02-3-1[ ]	123L03-3-1[ ]
	B	.340 - .640	123L01-3-2[ ]	123L02-3-2[ ]	123L03-3-2[ ]
	C	.555 - .855	123L01-3-3[ ]	123L02-3-3[ ]	123L03-3-3[ ]

▲ ▲ ▲ Add suffix for desired finish to complete part number. See bottom of page.

Panel Nut Version

All dimensions the same as snap-in version above.

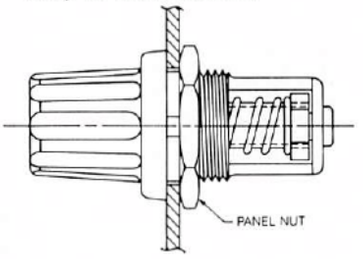

Panel Thickness	Pawl Type	Grip Range	4mm Hex Recess Head Part No.	Slotted Head Part No.	Hand-operated Knob Part No.
.160 Max. / .055 Min.	A	.118 - .403	123L11-1-1[ ]	123L12-1-1[ ]	123L13-1-1[ ]
	B	.340 - .640	123L11-1-2[ ]	123L12-1-2[ ]	123L13-1-2[ ]
	C	.555 - .855	123L11-1-3[ ]	123L12-1-3[ ]	123L13-1-3[ ]

▲ ▲ ▲ Add suffix for desired finish to complete part number. See bottom of page.

Select required part number from tables above, then simply add a suffix in place of the bracket to specify the material finish desired.

Finish Code To Complete Part No.	Cup/Stud Finish
AA	Zinc Plate
AB	Black Matte
AC	Bright Chrome

122L03 - 3 - 1 AA

- AA — Finish Code (Zinc Plate Shown)
- 1 — Grip Range
- 3 — Panel Thickness
- 122L03 — Hand-Operated Style

Get quote

Angic Global Solutions 1-888-872-0690
https://www.AngicGlobal.com Sales@AngicGlobal.com

Panel Preparation and Installation Data

122L Series. Panel Cutout

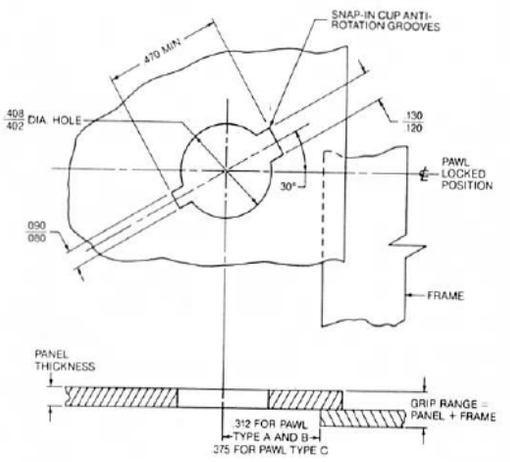

123L Series. Panel Cutout

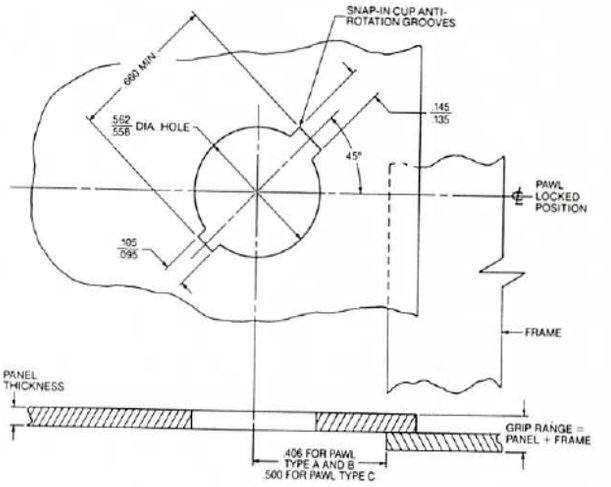

Installation Procedure

1. Locate and form clearance hole:
   122L Series = $\frac{.408}{.402}$ diameter reference
   123L Series = $\frac{.566}{.558}$ diameter reference
2. Form cup anti-rotation grooves per diagrams above.
3. Position pawl at extreme open position and insert pawl end into front side of mounting hole.
4. Push entire latch through hole, taking care to position torque lugs in proper anti-rotation grooves.

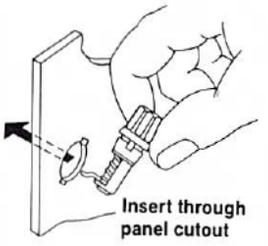

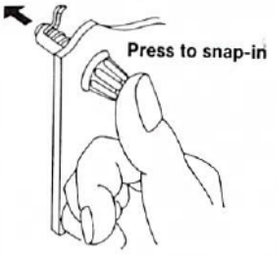

5. *For Snap-in versions:* Push with thumb until snap-ring passes completely through panel and expands to its open position.
6. *For Panel Nut versions:* Slip hex panel nut over pawl and thread onto latch housing.
7. Tighten hex nut.

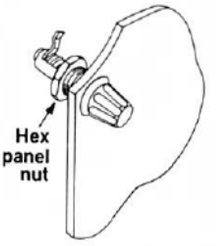

To Operate

1. Rotate head 1/4-turn clockwise to lock. Keep rotating head to increase clamping force.
2. To unlock, rotate head counterclockwise.

H

Get quote
Angic Global Solutions 1-888-872-0690
https://www.AngicGlobal.com Sales@AngicGlobal.com

Flush-mounted panel latches are designed to secure hinged panels. Each is provided with hand or tool-operated actuators. They mount completely flush (unless a knob actuator is specified), providing a clean, aesthetic appearance.

Flush-mounted panel latches open with finger-touch or a short turning movement. To close, simply push panel shut.

Section Contents

Type	Page No.
KM610/KM680 Series Push Button Actuator 	H-58 - H-59
118L Series 60°-Turn Actuator 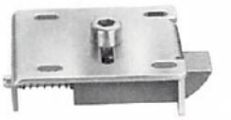	H-60 - H-61
104L Series 1/4-Turn Actuator 	H-62 - H-63
119L Series Finger Pressure Operation 	H-64 - H-65

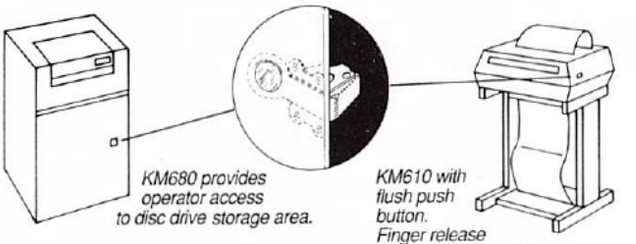

KM680 provides operator access to disc drive storage area.

KM610 with flush push button. Finger release to lift cover for paper loading on printer.

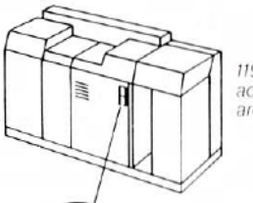

119L allows easy operator access to paper storage area on copier.

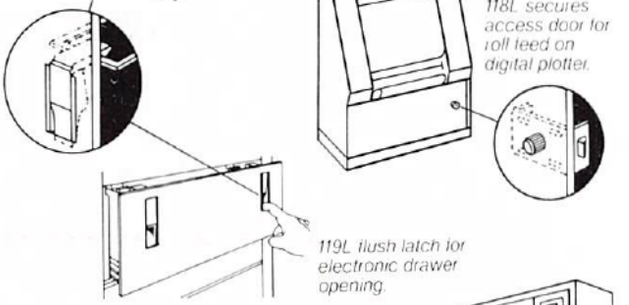

118L secures access door for roll feed on digital plotter.

119L flush latch for electronic drawer opening.

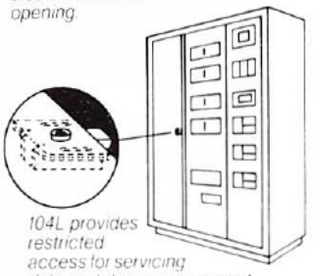

104L provides restricted access for servicing data switch gear equipment.

Get quote

Angic Global Solutions 1-888-872-0690
https://www.AngicGlobal.com Sales@AngicGlobal.com

Push Button, 1/4-Turn and Trigger Actuated Latches

Latches are shown actual size. Illustrations are typical only, and size may vary by part numbers.

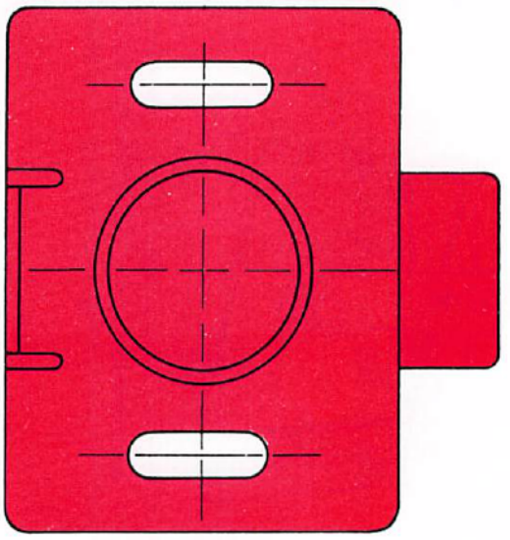

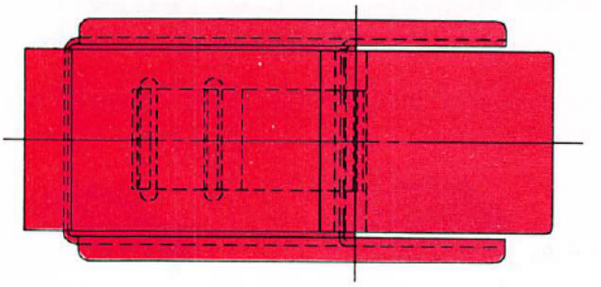

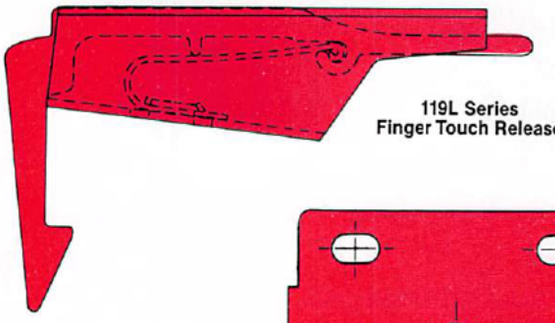

119L Series
Finger Touch Release

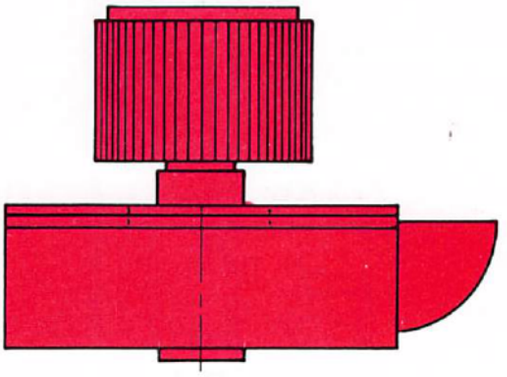

104L Series
1/4-Turn Actuator

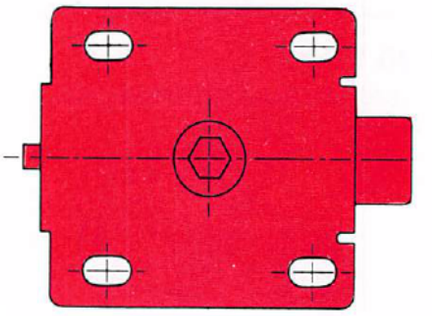

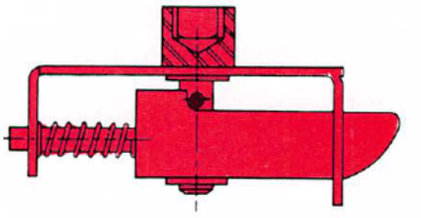

118L Series
60°-Turn Actuator

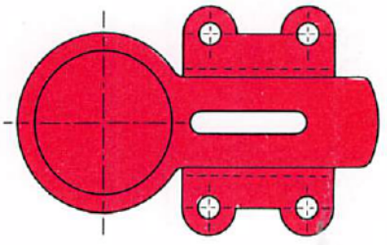

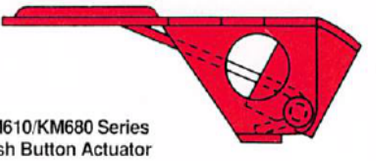

KM610/KM680 Series
Push Button Actuator

Series Number	Page Number	Strength	Specifications: Panel Thickness for Flush Mount (inches)	Specifications: Operating Action – To Open	Specifications: Operating Action – To Close	Features: Actuator Types – Hand-Operated Versions	Features: Actuator Types – Tool-Operated Versions	Features: Installation Method – Mechanical Mounting Versions	Features: Installation Method – Weld-on Mounting Versions
KM610	H-58-H-59	Light Duty	.064 / .032	Finger-touch release	Push Shut	•		•	•
KM680	H-58-H-59		.064 Nominal			•		•	•
118L	H-60-H-61		.064 Nominal	60°-Turn		•		•	•
104L	H-62-H-63	Medium Duty	.120 Nominal (See Note)	1/4-turn in either direction		•	•	•	•
119L	H-64-H-65	Medium Duty	.091 / .032	Hand-operated: Finger-touch release		•	•	•	•

Note: 104L Series h ...ted in catalog.

H

ANGIC GLOBAL SOLUTIONS Get quote
Angic Global Solutions 1-888-872-0690
https://www.AngicGlobal.com Sales@AngicGlobal.com

KM610/KM680 Series. Flush-Mounted Panel Latches. (Push Button Actuator).

Features:

- Latch mounts flush with panel. ■ Finger touch release for easy opening.
- Slam close to lock.

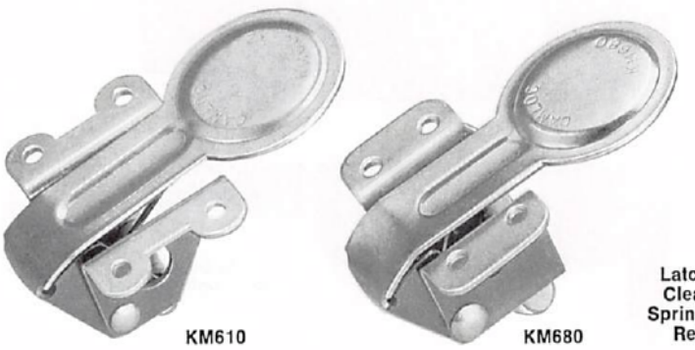

KM610 KM680

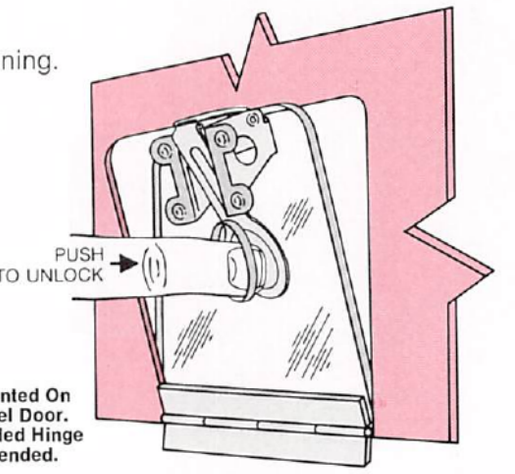

Latch Mounted On Clear Panel Door. Spring Loaded Hinge Recommended.

KM610 Series

(Flush mount for panel thicknesses .032, .051 and .064 inches.)

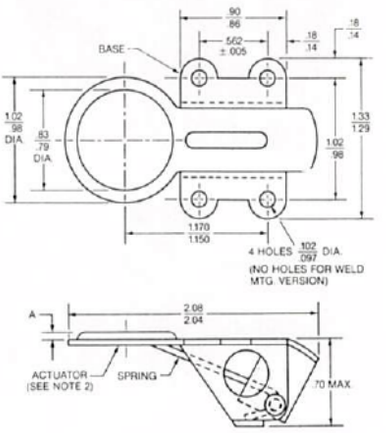

KM680 Series

All Stainless Steel Version

(Flush mount for panel thickness .064 inch.)

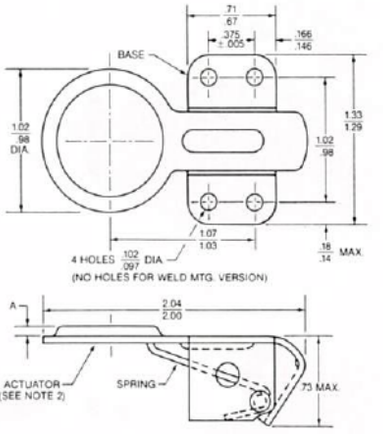

Description	Panel Thickness Ref.	Material	Part No.	A ±.010	Mounting Method	Weight Per Piece (lbs.)
KM610 Series	.032	Steel (Cadmium Plated) Actuator: Stainless Steel (Passivated)	KM610-32	.032	Rivet	.036
			KM610-32W		Weld	
	.051		KM610-51	.051	Rivet	
			KM610-51W		Weld	
	.064		KM610-64	.064	Rivet	
			KM610-64W		Weld	
KM680 Series	.064	Stainless Steel (Passivated)	KM680		Rivet	.040
			KM680W		Weld	

Notes: 1. Deflect base of latch at installation to align mounting holes.
2. Actuator is shown in the installed position. Free standing, spring would raise actuator approximately 45° above base.

Get quote

Angic Global Solutions 1-888-872-0690
https://www.AngicGlobal.com Sales@AngicGlobal.com

KM610/KM680 Series. Panel Preparation and Installation Data.

KM610 Series

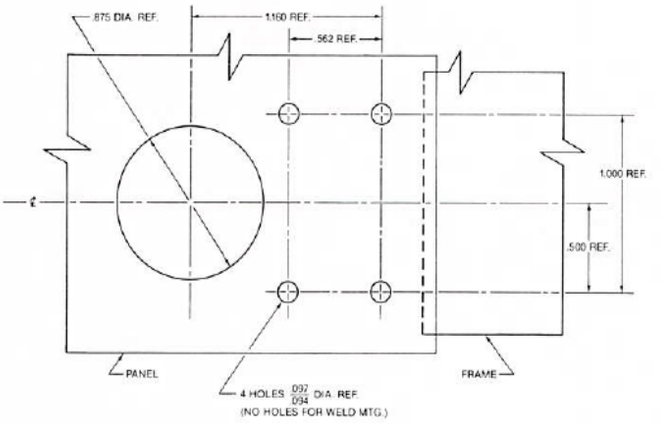

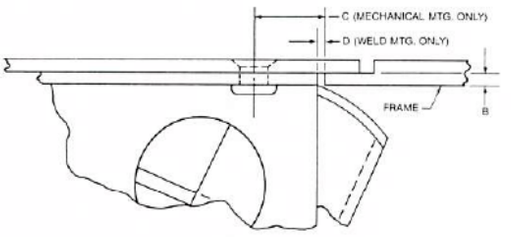

Side View Enlarged

KM680 Series

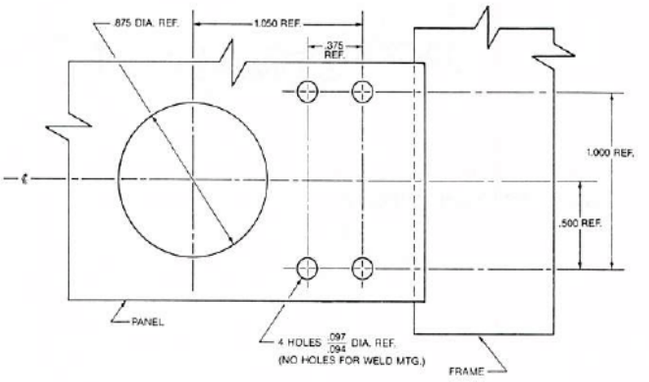

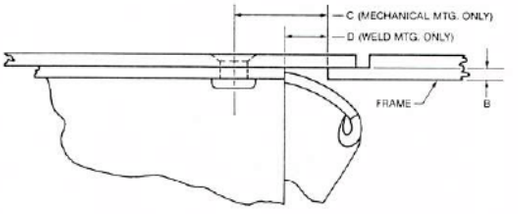

Side View Enlarged

Description	Frame Thickness B REF.	Mechanical Mounting C REF.	Weld Mounting D REF.
KM610 Series	.040	.204	.048
	.051	.232	.076
	.064	.262	.106
	.072	.279	.123
	.081	.297	.141
	.091	.314	.158
KM680 Series	.040	.218	.062
	.051	.247	.091
	.064	.276	.120
	.072	.290	.134
	.081	.306	.150
	.091	.322	.166

Mechanical Attachment:

1. Locate and form 1 hole .875 Diameter and 4 holes $\frac{.097}{.094}$ Diameter. Note correct "C" dimension (see table).
2. Attach with No. 2 screws or 3/32 diameter rivets (not supplied).

Weld Attachment:

1. Locate and form 1 hole .875 Diameter.
2. Weld in place. Note correct "D" dimension (see table).

H

ANGIC GLOBAL SOLUTIONS Get quote
Angic Global Solutions 1-888-872-0690
https://www.AngicGlobal.com Sales@AngicGlobal.com

FLUSH-MOUNTED PANEL LATCHES* 118L SERIES

60° -Turn Actuator

Features: ■ 60°-turn to open, slam to close. ■ Excellent for small envelope applications. ■ Actuator flush with panel (tool operated versions). ■ No strike required. ■ Slotted mounting holes provide .25 inch adjustment.

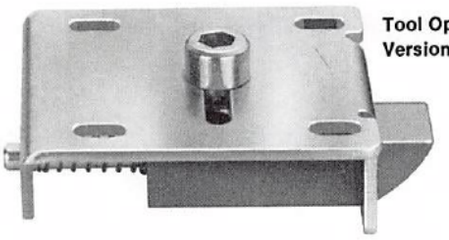

Tool Operated Version Shown

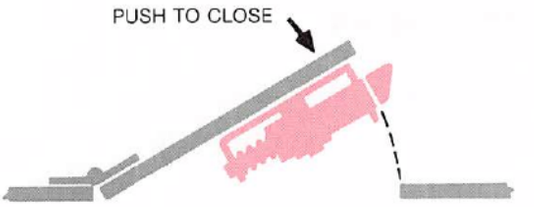

(*On hand operated version, actuator knob protrudes above panel.)

Tool Operated Version

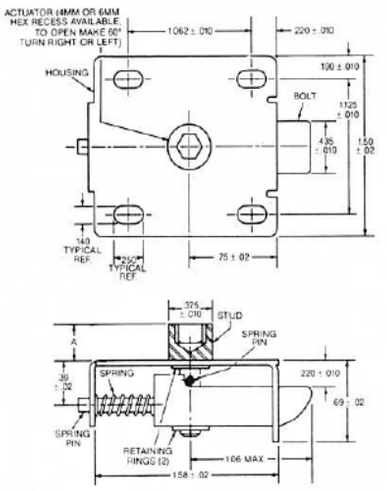

Hand Operated Version

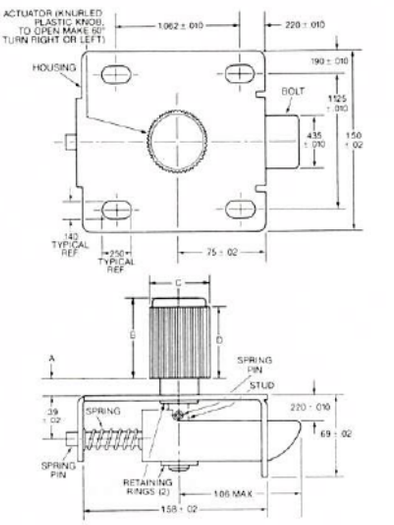

Description		Panel Thickness Ref.	Material	Part No.	A ±.010	B ±.02	C Dia. ±.02	D ±.02	Weight Per Piece (lbs.)
Operation	Actuator Style								
Tool	4mm Hex Recess	.120	Housing, Stud and Pins: Steel (Zinc Plated, Clear Chromate) Bolt: Zinc (Zinc Plated, Clear Chromate) Spring: Music Wire Retaining Rings: Stainless Steel (Passivated)	118L08-1-1AA	.120	N/A	N/A	N/A	.107
		.180		118L08-1-2AA	.180				
		.240		118L08-1-3AA	.240				
		.300		118L08-1-4AA	.300				
	6mm Hex Recess	.180		118L08-2-2AA	.180				.106
		.240		118L08-2-3AA	.240				
		.300		118L08-2-4AA	.300				
Hand	Knurled Plastic Knob	.060	Housing, Stud and Pins: Steel (Zinc Plated, Clear Chromate) Bolt: Zinc (Zinc Plated, Clear Chromate) Knob: Black Matte ABS Thermoplastic Spring: Music Wire Retaining Rings: Stainless Steel (Passivated)	118L09-1-1AA	.160	.66	.53	.59	.111
		.120		118L09-1-2AA	.220				
		.180		118L09-1-3AA	.280				
		.240		118L09-1-4AA	.340				
		.300		118L09-1-5AA	.400				
		.060		118L09-2-1AA	.160	.69	.72	.62	.114
		.120		118L09-2-2AA	.220				
		.180		118L09-2-3AA	.280				
		.240		118L09-2-4AA	.340				
		.300		118L09-2-5AA	.400				

Get quote

Angic Global Solutions 1-888-872-0690
https://www.AngicGlobal.com Sales@AngicGlobal.com

Panel Preparation and Installation Data

Tool Operated

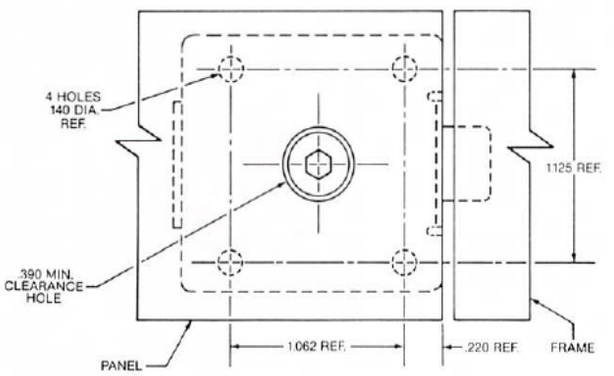

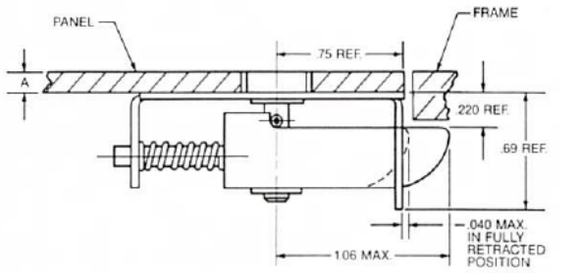

Hand Operated

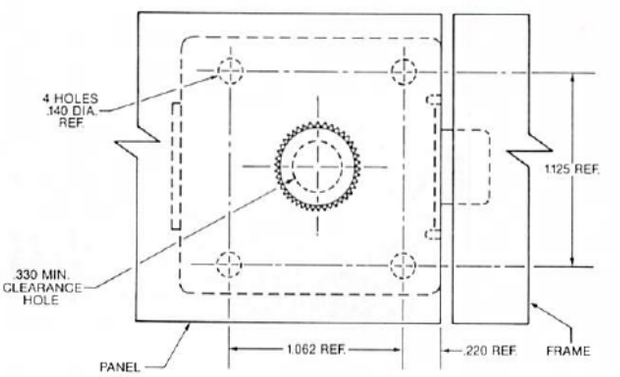

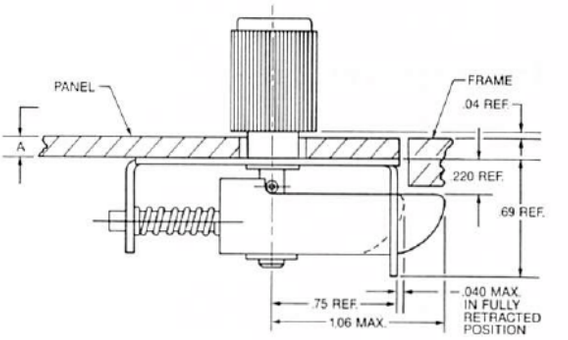

1. Select proper latch to meet your panel thickness requirement (see table at right).
2. Locate and form 4 mounting holes .140 diameter reference and 1 clearance hole (see following table).

Basic Part No.	Clearance Hole Diameter Ref.
118L08	.390
118L09	.330

3. Attach with No. 5 machine screws (not supplied).
4. For hand operated versions, press on plastic knob after mounting latch to panel.

Description	Part No.	A Ref. Panel Thickness
Tool Operated	118L08-1-1AA	.120 (See Note)
	118L08-1-2AA	.180
	118L08-1-3AA	.240
	118L08-1-4AA	.300
	118L08-2-2AA	.180
	118L08-2-3AA	.240
	118L08-2-4AA	.300
Hand Operated	118L09-1-1AA	.060
	118L09-1-2AA	.120
	118L09-1-3AA	.180
	118L09-1-4AA	.240
	118L09-1-5AA	.300
	118L09-2-1AA	.060
	118L09-2-2AA	.120
	118L09-2-3AA	.180
	118L09-2-4AA	.240
	118L09-2-5AA	.300

Note: If installation requires flush actuator on panel less than .120, spacers will be required between panel and latch.

H

ANGIC GLOBAL SOLUTIONS
Get quote
Angic Global Solutions 1-888-872-0690
https://www.AngicGlobal.com Sales@AngicGlobal.com

1/4 - Turn Acuator – 104L Series

Features:

■ 1/4-turn to open, slam to close. ■ Actuator flush with panel (tool operated versions).
■ No strike required. ■ Slotted mounting holes provide .75 inch adjustment.

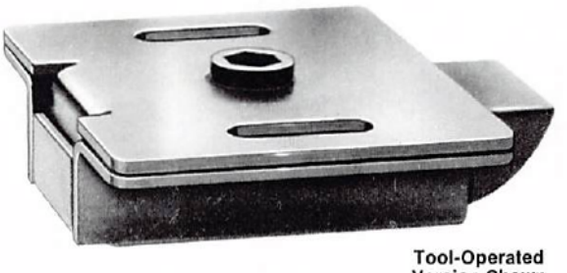

Tool-Operated Version Shown

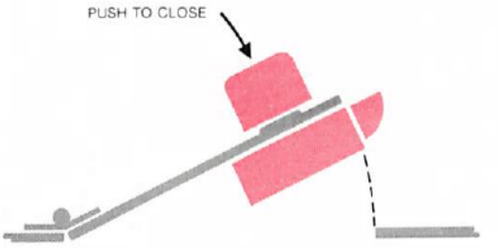

Tool Operated Version

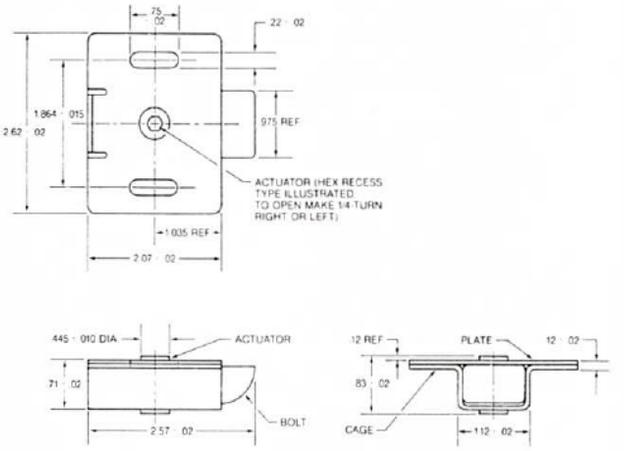

Hand Operated Version

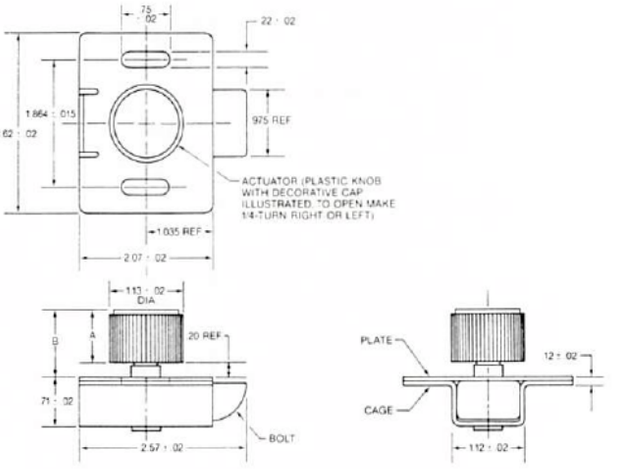

Panel preparation and installation are shown on next page.

Description (See Note)		Material	Part No.	A ±.02	B ±.02	Weight Per Piece (lbs.)
Operation	Actuator Style					
Tool	6mm Hex Recess	Cage and Plate: Steel (No Finish) Bolt and Actuator: Zinc (No Finish) Spring: Music Wire	104L01-1-1AA	N/A	N/A	.50
	M8 x 1.25 Thread		104L01-2-1AA	N/A	N/A	
Hand	Plastic Knob	Cage and Plate: Steel (No Finish) Bolt and Actuator: Zinc (No Finish) Spring: Music Wire Knob: ABS Thermoplastic (Matte Black)	104L01-3-1AA	.78	.98	.55
	Plastic Knob With Decorative Cap	Cage and Plate: Steel (No Finish) Bolt and Actuator: Zinc (No Finish) Spring: Music Wire Knob: ABS Thermoplastic (Matte Black) Cap: Aluminum (Diamond Cut, Matte Spun)	104L01-4-1AA	.80	1.00	

Note: For other actuator styles contact Camloc Products Division.

*Hand operated versions, actuator knob protrudes above panel.

Get quote

Angic Global Solutions 1-888-872-0690
https://www.AngicGlobal.com Sales@AngicGlobal.com

FLUSH-MOUNTED PANEL LATCHES 104L/PT104L SERIES

Key or Bail Operated - PT104L Series

■ Supplied with Bail *and* Key. ■ Acuator flush with panel.
■ No strike required. ■ Slotted mounting holes provide .75 inch adjustment.

PT104L18

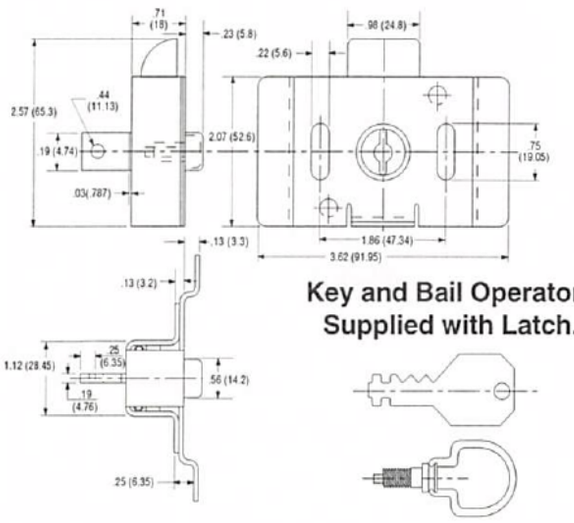

Key and Bail Operators Supplied with Latch.

PT104L24

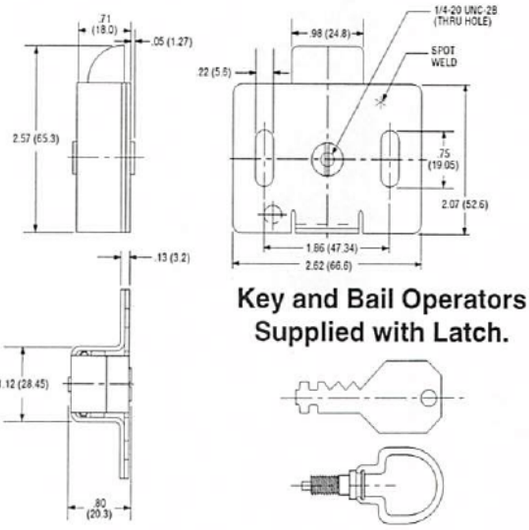

Key and Bail Operators Supplied with Latch.

Description		Material	Part Number	Weight Per Piece (Lbs.)
Operation	Actuator Style			
Tool	1/4" x 20" Thread and key	Cage and Plate: Steel (Zinc Plated) Bolt and Actuator: Sintered Steel (Zinc Plated) Spring: Music	PT104L18-2-1AA PT104L24-1-1AA	.50

Note:Keys and Bails available separately; contact factory.

Panel Preparation and Installation Data (104L and PT104L Series)

Tool Operated

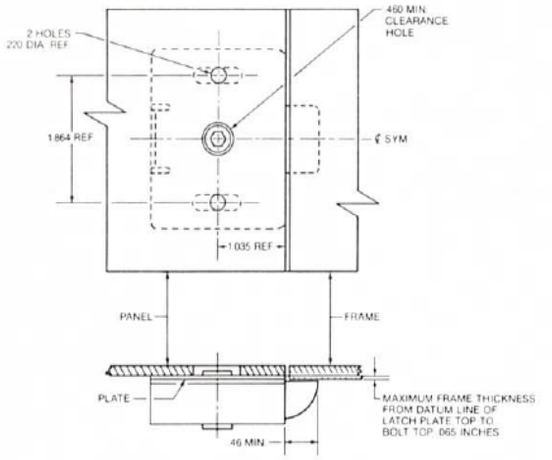

1. Locate and form 2 holes .220 Diameter Reference and 1 clearance hole .460 Diameter Minimum.
2. Attach latch with No. 10 screws (not supplied). Slotted mounting holes in latch allow .75 inch adjustment prior to attachment.

Hand Operated

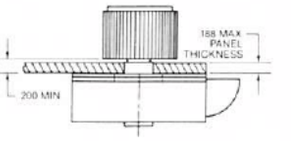

1. See tool operated version, notes 1 and 2.
2. Press on plastic knob after mounting latch to panel.

H

ANGIC GLOBAL SOLUTIONS
Get quote
Angic Global Solutions 1-888-872-0690
https://www.AngicGlobal.com Sales@AngicGlobal.com

FLUSH-MOUNTED PANEL LATCHES 119L SERIES

Features: ■ Mounts flush with access doors or hinged panels to provide smooth, clean appearance for modern equipment. ■ Opens with a light finger pressure; is slammed to close. ■ Clear or black matte finish.

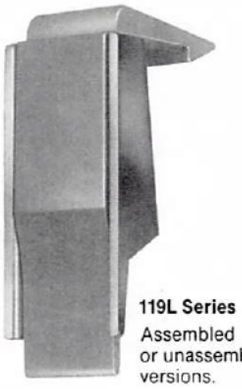

119L Series
Assembled
or unassembled
versions.

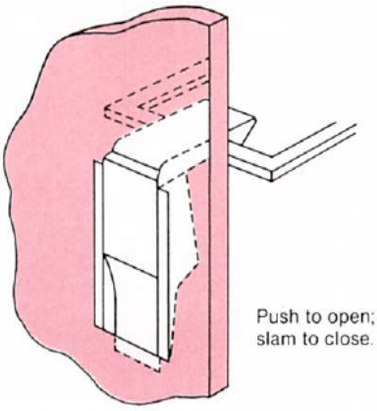

Push to open;
slam to close.

Unassembled Version

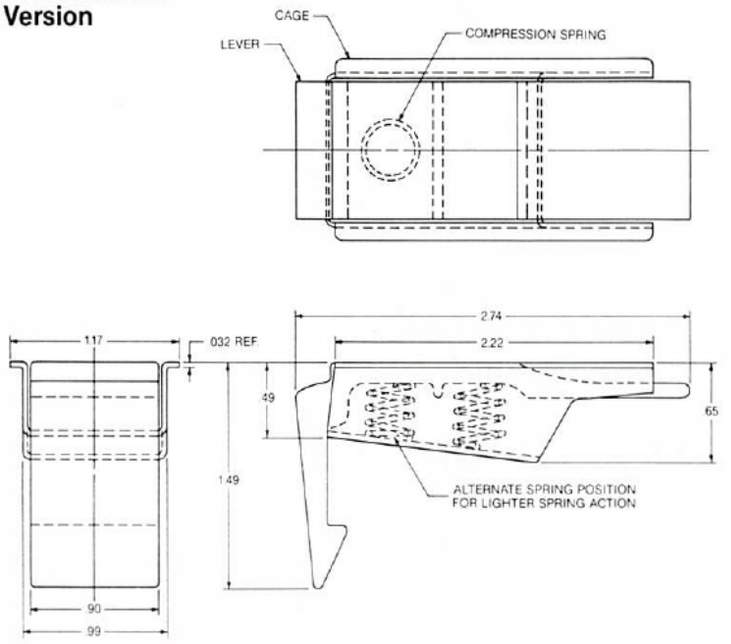

Assembled Version

(Dimensions same as at left)

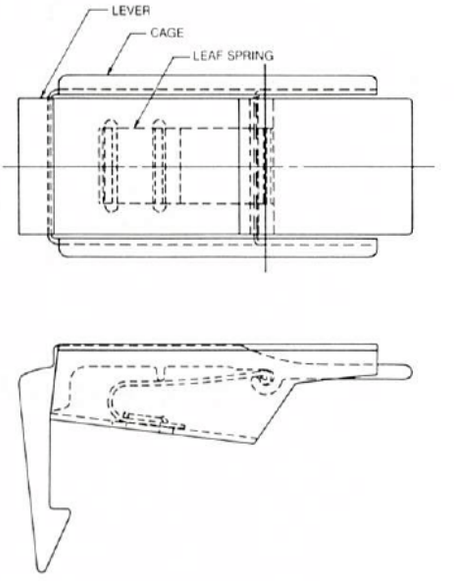

Material	Part No.	Type
Steel Cage (Zinc Plated, Clear Chromate)	119L01-1-1AA	Unassembled
Aluminum Lever (Clear Matte Anodized)	119L01-2-1AA	Assembled
Steel Cage (Zinc Plated, Black Phosphate)	119L01-1-1AB	Unassembled
Aluminum Lever (Black Matte Anodized)	119L01-2-1AB	Assembled

Steel Spring (Zinc Plated With Clear Chromate)

NOTE: Minimum order quantity is 2500 pieces for the 119L01-2 versions.

Get quote

Angic Global Solutions 1-888-872-0690
https://www.AngicGlobal.com Sales@AngicGlobal.com

Panel Preparation and Installation Data

Panel Preparation:

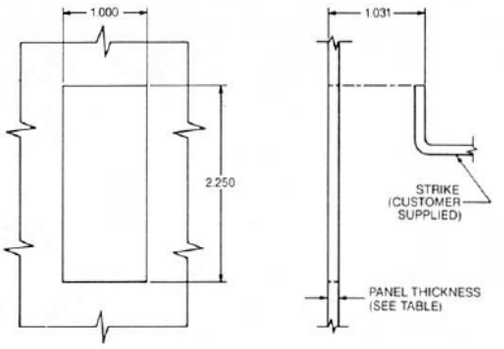

Assembly (unassembled version only)

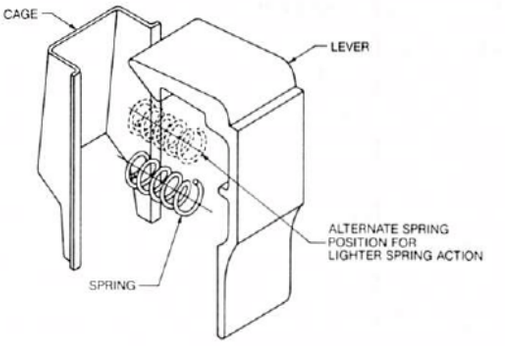

Panel Installation:

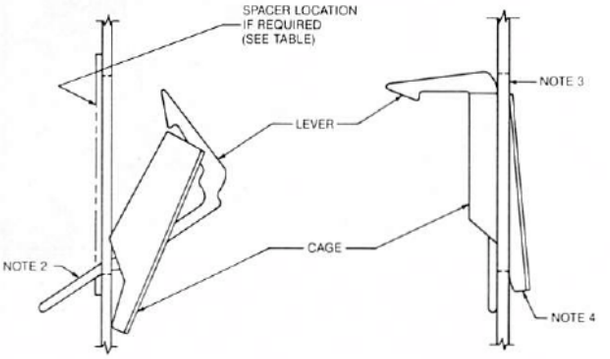

Notes:

1. Hold latch together in one hand.
2. Insert tail end of lever through lower end of hole in panel.
3. Push the top end of the lever into upper end of hole and press.
4. Snap cage into position by pushing upward.

Spacers for Small Panel Thicknesses

When a spacer is required, place it behind panel with holes in alignment before inserting latch. The installed latch will secure the spacer in position.

Panel Thickness	Spacer Part No.
.031-.062	119L08-2-1AA
.063-.093	119L08-1-1AA
.094-.125	None Required

Typical Applications:

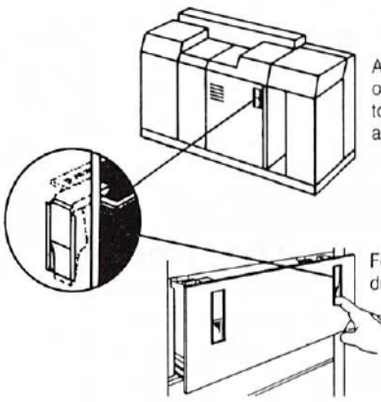

Allows easy operator access to paper storage area on copier.

For electronic drawer opening.

H

Get quote
Angic Global Solutions 1-888-872-0690
https://www.AngicGlobal.com Sales@AngicGlobal.com

Ram™ Aerospace Latch Mechanisms

Features & Benefits

- A part of every major program of the past 30 years.
- Hook... to Rotary... to Shear Pin latches, plus more.
- Specialists in design studies and prototype development.

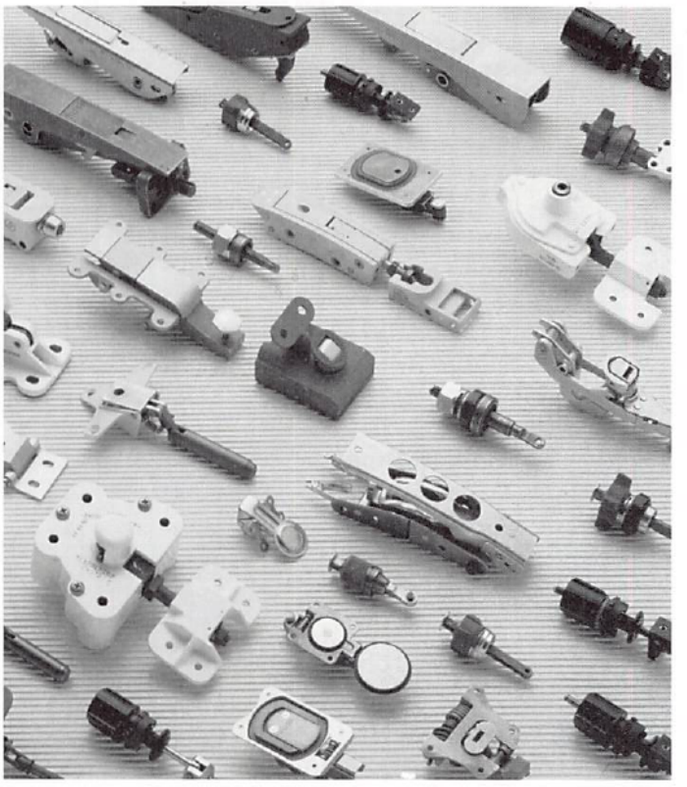

Ram™ Aerospace Latches (this section) and Avionic Hold-Down Devices (Section E) are found on most modern military and commerical aircraft

Camloc/Ram specializes in custom devices designed to optimize performance for specific applications. Our Ram™ latch experts can solve even the most critical and complex design problems created by weight and envelope restrictions, rapid accessibility requirements and extreme environments.

Camloc/Ram delivers a total integrated design/product package: from concept sketches and detailed engineering studies...to developmental hardware and prototypes...and finally, to precison structural mechanisms that are delivered on time and within budget.

All Ram™ latches are manufactured and tested to the highest standards assuring reliable performance in applications where there is no room for error.

Ram™ Hook Latches include models with reverse triggers, D-handles, adjustable hooks and safety locks. Low profile hook latches offer strength and reliability in restricted envelope applications. Camloc/Ram also produces pressure relief latches, button latches, adjustable keeper assemblies, shear tension and shear pin latches, hinges and handles, multi-directonal load latches and high-performance rotary latches. Rotary latches, made for flat or curved doors and panels, are tool-operated and include mating striker or eyebolt.

Designs In This Section

Aerospace engineers are some of the most creative designers in any industry. That's why we've structured our business and this section as a source of ideas rather than final solutions set in stone.

While browsing through this section you'll see that Camloc/Ram may already have the latch you need...there are many specific part numbers listed from which to order. However, we would like you to consider this section as the starting point in development of the ideal latch for your application.

Our engineers have conquered the most challenging latching problems of the past 30 years, and we welcome the opportunity to meet your requirements. We invite you to call our engineering department about the latches seen in this catalog, and especially for those *not* seen.

ANGIC

Get quote

Angic Global Solutions 1-888-872-0690
https://www.AngicGlobal.com Sales@AngicGlobal.com

Typical Applications

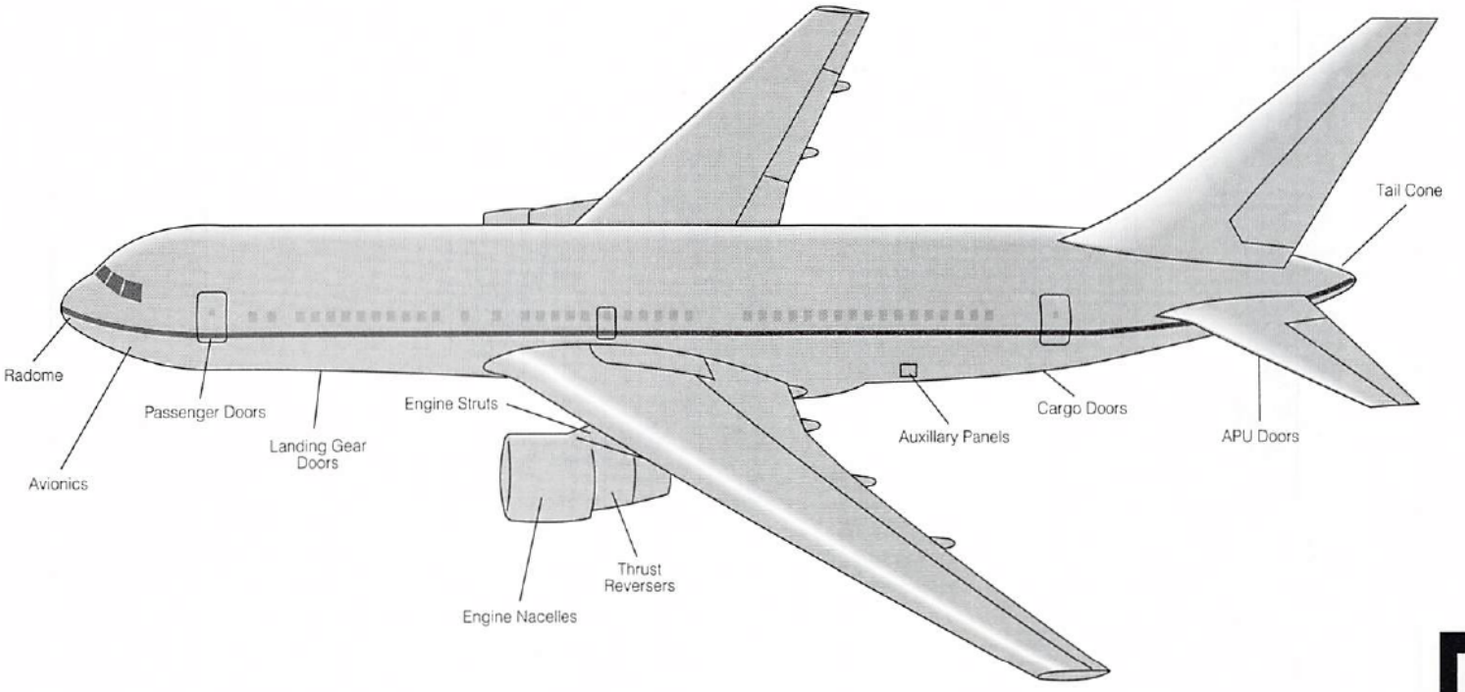

I

Section Contents

	Pages		Pages
Hook Latches	I-3 to I-8	Shear Tension Latches	I-45 to I-48
Low Profile Hook Latches	I-9 to I-12	Rotary Latches	I-49 to I-54
Adjustable Hook Latches	I-13 to I-18	Rotary Latch Strikers	I-55 to I-56
Hook Latch Keepers	I-19 to I-28	Shear Pin	I-57 to I-60
Hook Latch and Keeper Fittings	I-29 to I-30	Flush Handles	I-61 to I-66
Pressure Relief Latches	I-31 to I-36	Hinges	I-67 to I-72
Push Button Latches	I-37 to I-44	Hydraulic Snubbers	I-73 to I-76

ANGIC GLOBAL SOLUTIONS

Get quote

Angic Global Solutions 1-888-872-0690
https://www.AngicGlobal.com Sales@AngicGlobal.com

Series	Dimensions	Material/ Finish	Ultimate Load, lbs.
TL10067 	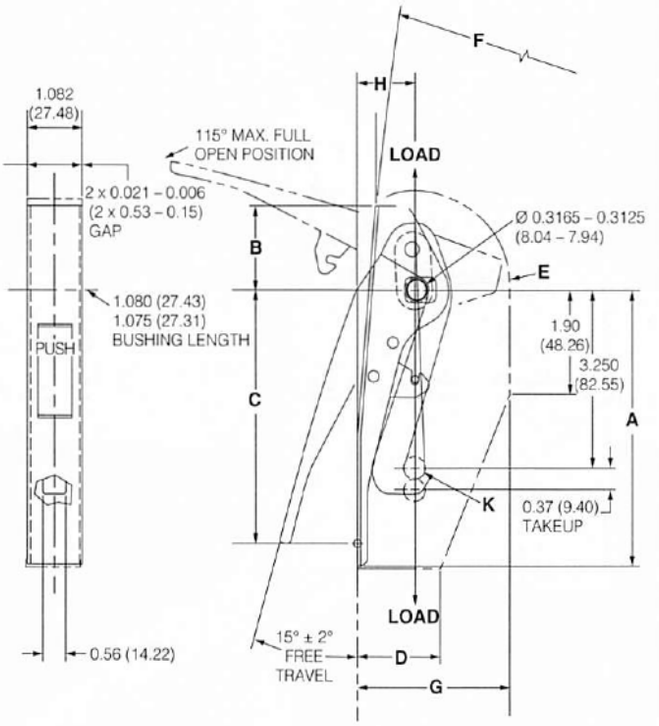	Hook: 17-4PH Cres/Passivate Handle and Trigger: 17-7PH CRES/Passivate	10,000 (4,535)
TL10101 	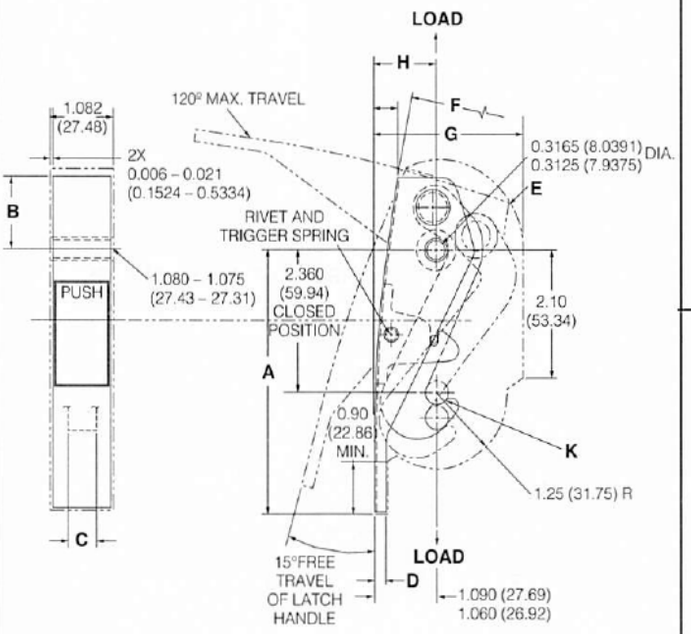	Hook: 17-4PH Cres/Passivate Handle and Trigger: 17-7PH CRES/Passivate	10,000 (4,535)
		Hook: 4340M Alloy Steel/ Cadmium-Titanium	12,000 (5,443) 17,000 (7,711)

Dimensions specified in inches (millimeters) and pounds (kilograms).
Note: Variables may not represent the same dimensions on all series numbers.

Get quote
Angic Global Solutions 1-888-872-0690
https://www.AngicGlobal.com Sales@AngicGlobal.com

A	B	C	D	E	F	G	H	K	Weght, lbs.	Part Number
5.06 (128.52)	1.53 (38.86)	4.68 (1128.87)	1.60 (40.64)	R 1.80 (45.72)	49.0 -51.0 (1244.60- 1295.40)	2.90 (73.66)	1.094 (27.89)	.375 (9.53)	1.00 (.45)	**TL10067-103** **TL10067-105** **TL10067-106**
	1.54 (39.12)				53.0 - 54.0 (1346.20 - 1371.60)					**TL10067-101**
					53.0 -55.0 (1346.20- 1397)					**TL10067-107** **TL10067-108** **TL10067-109**
	1.52 (38.61)				58.0 -60.0 (1473.20 - 1524.00)					**TL10067-104**
	1.44 (36.58)				84.5 -85.5 (2146.30 - 2171.70)					**TL10067-102**
4.160 (105.664)	1.24 (31.50)	.375 (9.53)	.19 (4.83) Max.	R 1.50 (38.10)	R 29.00 ± 50	2.63 (66.80)	1.070 (27.18)	.375 (9.53)	.70 (0.32)	**TL10101-103**
4.340 (110.24)	1.24 (31.50)	.535 (13.589) Max.	.19 (4.83) Max.	R 1.50 (38.10)	R 32.50 (825.50)	2.63 (66.80)	1.070 (27.18)	.375 (9.53)	.80 (0.36)	**TL10101-102**
4.160 (105.664)	1.24 (31.50)	.440 (11.18) Max.	.19 (4.83) Max.	R 1.50 (38.10)	R 32.50 (825.50)	2.63 (66.80)	1.070 (27.18)	.375 (9.53)	.90 (0.41)	**TL10101-104**

Get quote
Angic Global Solutions 1-888-872-0690
https://www.AngicGlobal.com Sales@AngicGlobal.com

Series	Dimensions	Material/ Finish	Ultimate Load, lbs.
TL10410 Engine Panel 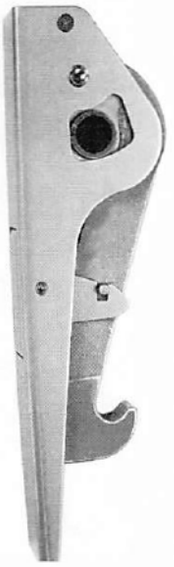	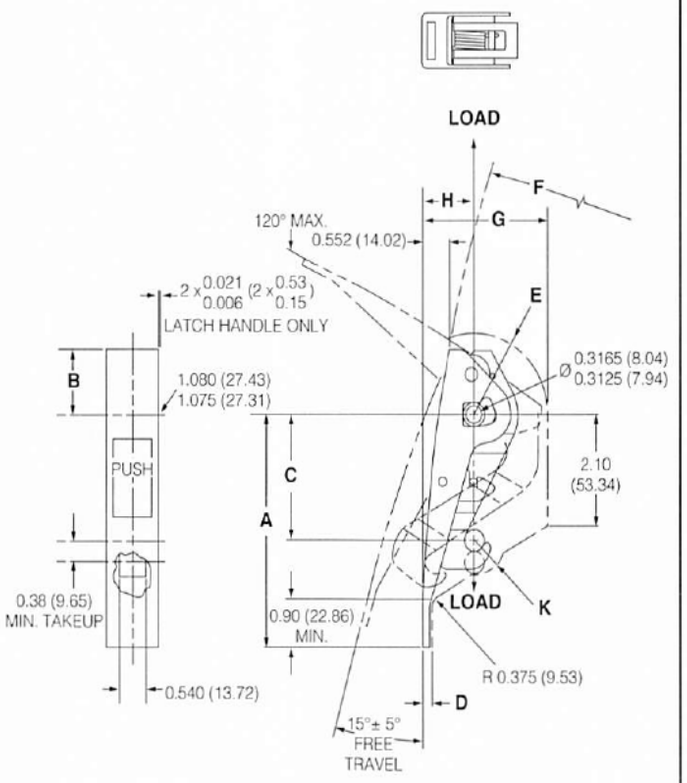	Hook: 15-5 CRES/Passivate Handle and Trigger: 17-7PH CRES/ Passivate	10,000 (4,535)
TL10589 Engine Panel 	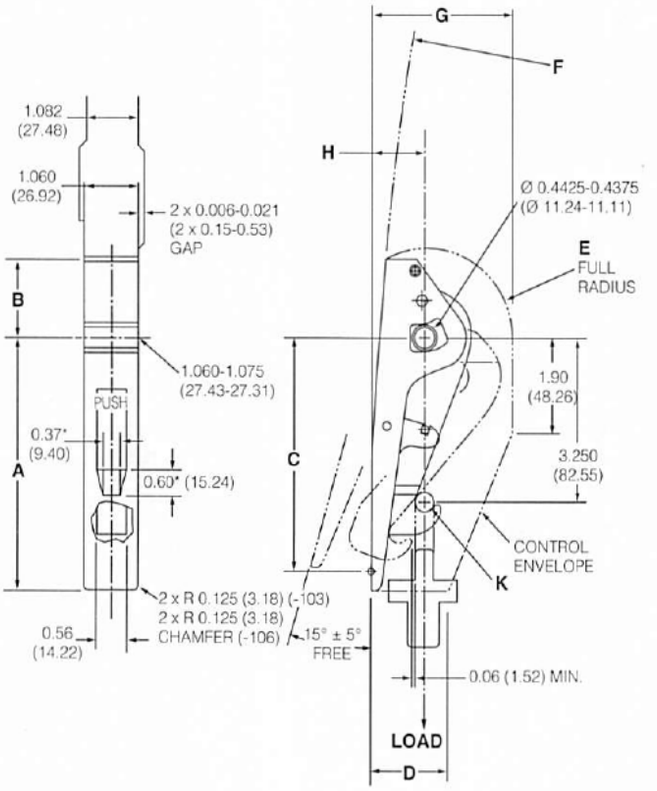 * For Screwdriver Pocket only.	Hook: 4340M Alloy Steel/ Cadmium Plated Handle and Trigger: 17-7PH CRES/ Passivate	13,000 (5,896) 17,000 (7,711)

Dimensions specified in inches (millimeters) and pounds (kilograms).
Note: Variables may not represent the same dimensions on all series numbers.

Get quote
Angic Global Solutions 1-888-872-0690
https://www.AngicGlobal.com Sales@AngicGlobal.com

A	B	C	D	E	F	G	H	K	Weight, lbs.	Feature Notes	Part Number
4.340 (110.24)	1.240 (31.50)	2.360 (59.94)	.19 (4.83) Max.	R 1.50 (38.10)	R 28.5 ± .5 (723.90)	2.60	1.070 (27.18)	R.63 (16.00)	.90 (1.41) Max.	10,000 Full Cycle Life	**TL10410-101**
4.800 (121.920)	1.33-1.37 (33.78 - 34.80)	4.430 (112.52)	1.75 (44.45)	Full R	R 109.00 / 107.00 (2768.60 / 2717.80)	2.95 (74.93)	1.250 (31.750)	0.395 (10.03)	0.95 (0.43) 1.0 (0.45)	With Screwdriver Pocket	**TL10589-102** **TL10589-105**
5.060 (128.52)	1.540 (39.11)	4.68 (1187.87)	1.60 (40.64)	Full R	R 76.00 / 75.00 (1930.40 / 1905.00)	2.90 (73.66)	1.094 (27.79)	0.385 (9.78)	0.95 (0.43) 1.0 (0.45)	With Screwdriver Pocket	**TL10589-101** **TL10589-104**
		4.49 (114.05)	2.02 (51.31)	Full R	R 79.00 / 78.00 (2006.60 / 1981.20)	3.32 (84.33)	1.34 (34.04)	0.385 (9.78)	1.0 (0.45)	With Screwdriver Pocket	**TL10589-103** **TL10589-106**

Get quote
Angic Global Solutions 1-888-872-0690
https://www.AngicGlobal.com Sales@AngicGlobal.com

Series	Dimensions	Material/ Finish	Ultimate Load, lbs.
TL10176 **T/R Latch Square Drive**	 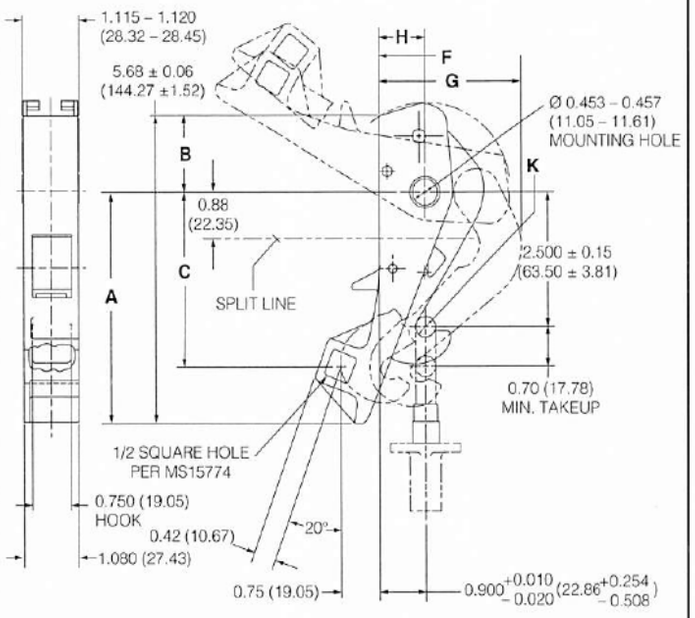	Hook: 300M Steel CRES/Passivate Handle & Trigger: 17-4PH CRES/Passivate	16,000 (7,257)

Series	Dimensions	Material/ Finish	Ultimate Load, lbs.
TL10185 **Cowl Panel**	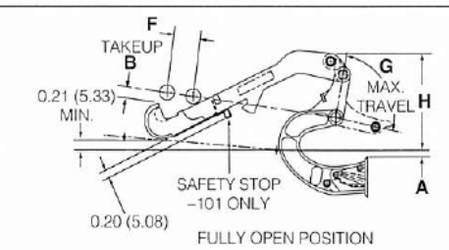 FULLY OPEN POSITION 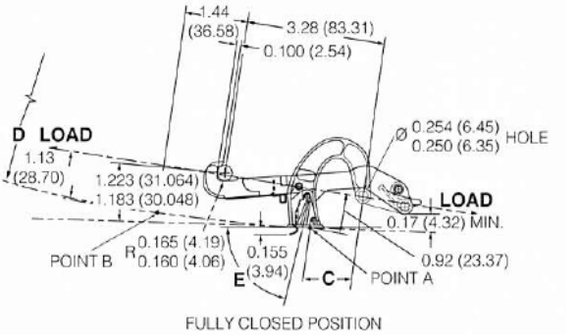 FULLY CLOSED POSITION 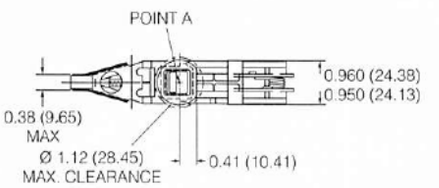	Hook, Handle & Socket: 17-4PH CRES/Passivate Compression Spring (-101 only): 302 CRES/Passivate Safety Stop (-101 only): 301 CRES/Passivate	4,000 (1,814)

Dimensions specified in inches (millimeters) and pounds (kilograms).
Note: Variables may not represent the same dimensions on all series numbers.

Get quote
Angic Global Solutions 1-888-872-0690
https://www.AngicGlobal.com Sales@AngicGlobal.com

	A	B	C	D	E	F	G	H	K	Weight, lbs.	Feature Notes	Part Number
	4.30 (109.22)	1.38 (35.05)	3.26 ± .06 (82.80)	–	–	R 0.00	2.90 (73.66)	0.900 (22.86)	0.375 (90.53)	1.13 (.51)	–	**TL10176-101**

	A	B	C	D	E	F	G	H	K	Weight, lbs.	Feature Notes	Part Number
	.10 (2.54) Min.	.25 (6.35) Min.	1.18 (29.97)	R 32.00 (812.80)	75°	.60 (15.24)	92°	2.55 Max.	–	.50 (.23)	Has Safety Stop	**TL10185-101**
			1.18 (29.97)								No Safety Stop	**TL10185-102**
	.25 (6.35) Min.	.40 (10.16) .34 (8.64)	1.18 (29.97) Min.	R12.00 (304.80)	15° Min.	.40 (10.16)	94°	2.10 (53.34) Max.	–	.45 (.20)	Has Safety Stop	**TL10185-103**

ANGIC GLOBAL SOLUTIONS Get quote
Angic Global Solutions 1-888-872-0690
https://www.AngicGlobal.com Sales@AngicGlobal.com

Series	Dimensions	Material/ Finish	Ultimate Load, lbs.
TL10162 Low Profile 	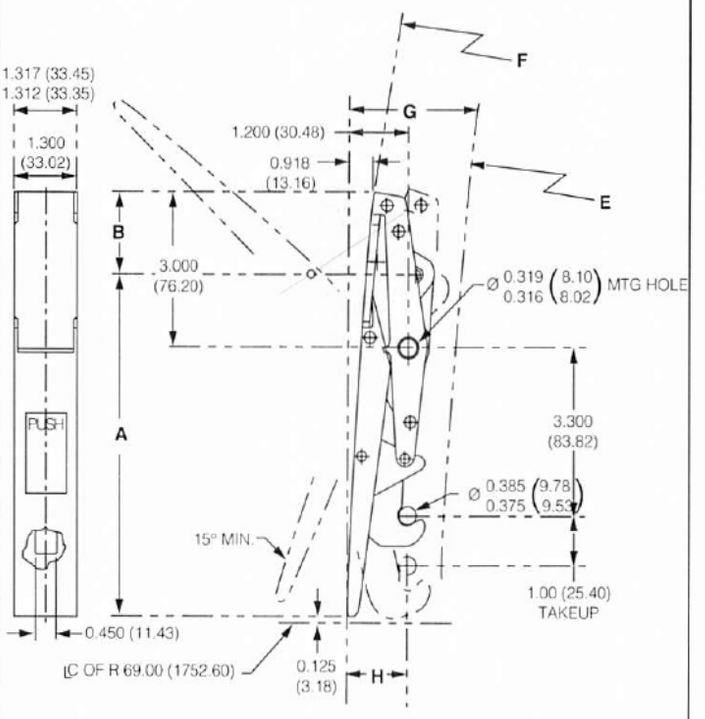	Hook: 17-4PH Shot Peened Handle, Trigger & Cover: 17-7PH CRES/ Passivate	9,000 (4,082)
TL10343 Low Profile 	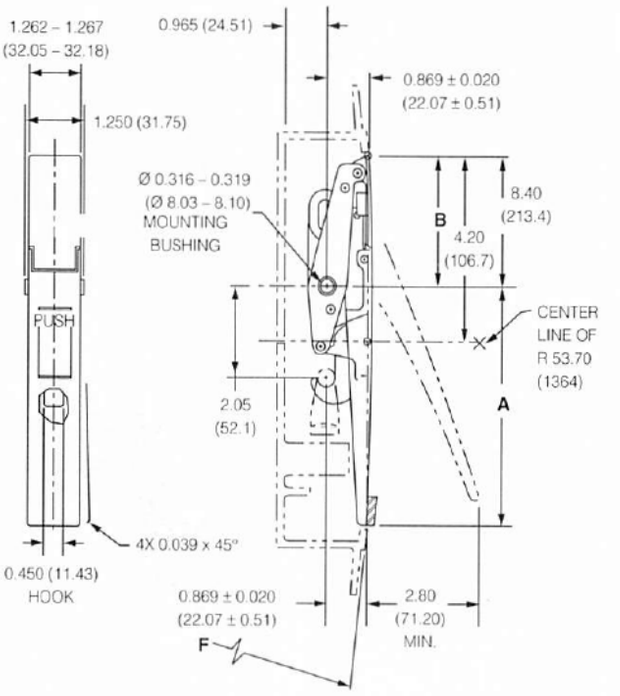	Hook: 17-4PH CRES/ Passivate Trigger, Cover and Handle: 17-7PH CRES/Passivate	8,500 (3,855)

Dimensions specified in inches (millimeters) and pounds (kilograms).
Note: Variables may not represent the same dimensions on all series numbers.

Get quote
Angic Global Solutions 1-888-872-0690
https://www.AngicGlobal.com Sales@AngicGlobal.com

	A	B	C	D	E	F	G	H	K	Weight, lbs.	Feature Notes	Part Number
	6.687 (169.85)	1.623 (41.22)	–	1.875 (47.62)	R67.10 (1704.34)	R69.00 (1752.60)	2.50 (63.50)	1.20 (30.48)	0.375 (9.53)	1.11 (.50)	–	**TL10162-101**
	5.40 (137.16)	3.00 (76.20)	–	–	–	R53.7 (1363.98)	1.833 (46.56)	.868 (22.05)	0.375 (9.525)	1.15 (.52)	1" Takeup (25.40)	**TL10343-101**

Get quote
Angic Global Solutions 1-888-872-0690
https://www.AngicGlobal.com Sales@AngicGlobal.com

Series	Dimensions	Material/ Finish	Ultimate Load, lbs.
TL10601 Low Profile 	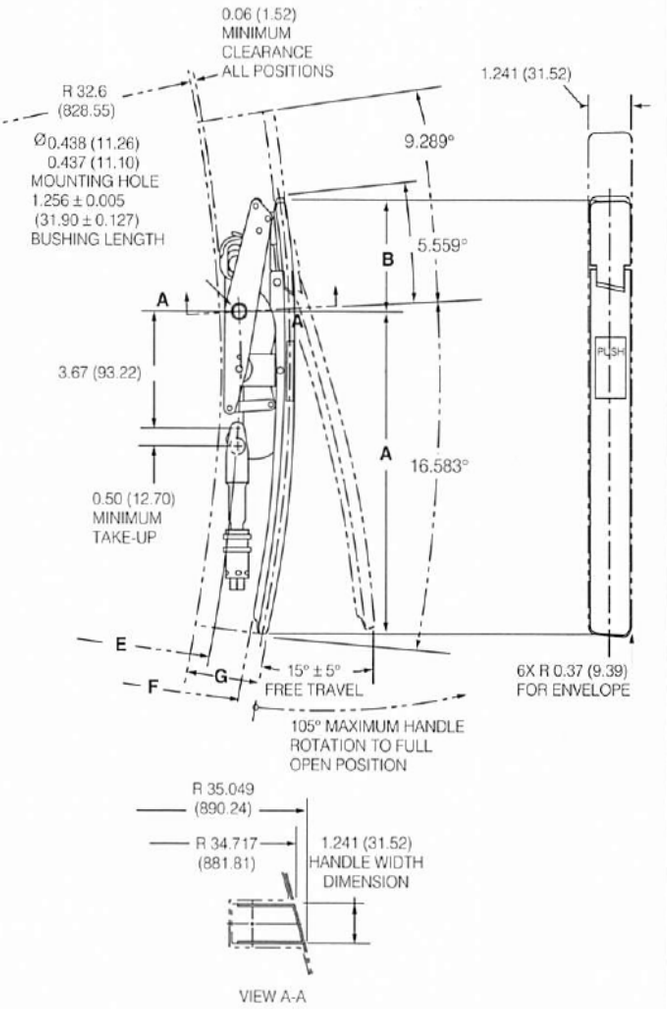	Hook: A286/Passivate Handle, Trigger and Cover: 17-4PH CRES/ Passivate	15,000 (6,803)
			

Adjusts with a 5/8" open end wrench (-101 thru -104), a 7/64" hex key wrench or a .125 diameter pin (-105 thru -112).

Dimensions specified in inches (millimeters) and pounds (kilograms).
Note: Variables may not represent the same dimensions on all series numbers.

Get quote
Angic Global Solutions 1-888-872-0690
https://www.AngicGlobal.com Sales@AngicGlobal.com

	A	B	C	D	E	F	G	H	K	Weight, lbs.	Feature Notes	Part Number
	9.89 ± .02 (251.21)	3.330 ± 0.15 (84.58)	–	–	R33.245 (844.42)	R34.43 (874.52) Min.	2.44 (61.98)	1.78 (45.21)	.50 (12.70)	2.60 (1.18)	Latch Face Angle as Shown	**TL10601-101**
											Latch Face Angle Opposite	**TL10601-102**

Get quote
Angic Global Solutions 1-888-872-0690
https://www.AngicGlobal.com Sales@AngicGlobal.com

Series	Dimensions	Material/ Finish	Ultimate Load, lbs.
TL10183 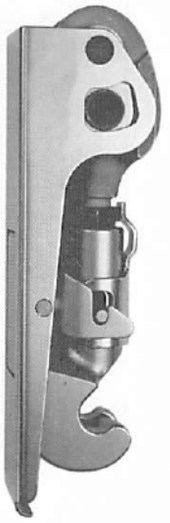	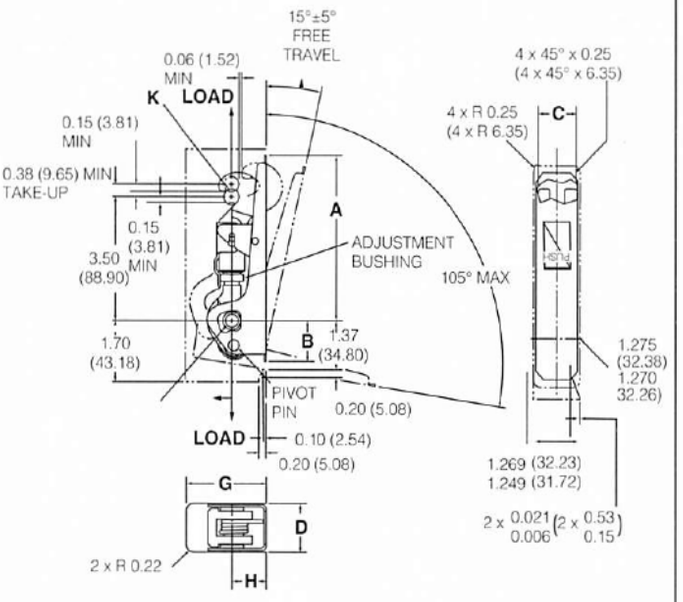 Adjusts with a standard 5/8" open end wrench.	Hook: 17-4PH CRES/Passivate Hook Base: 4390 Modified Alloy Steel/ Cadmium-Titanium Handle and Trigger: 17-7PH CRES/ Passivate	15,000 (6,803)
TL10588 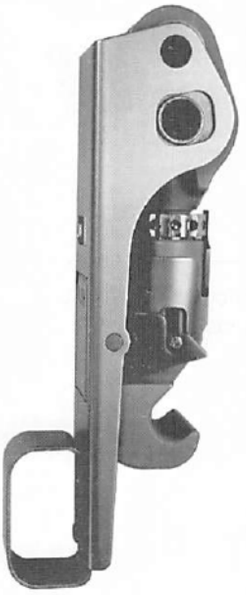	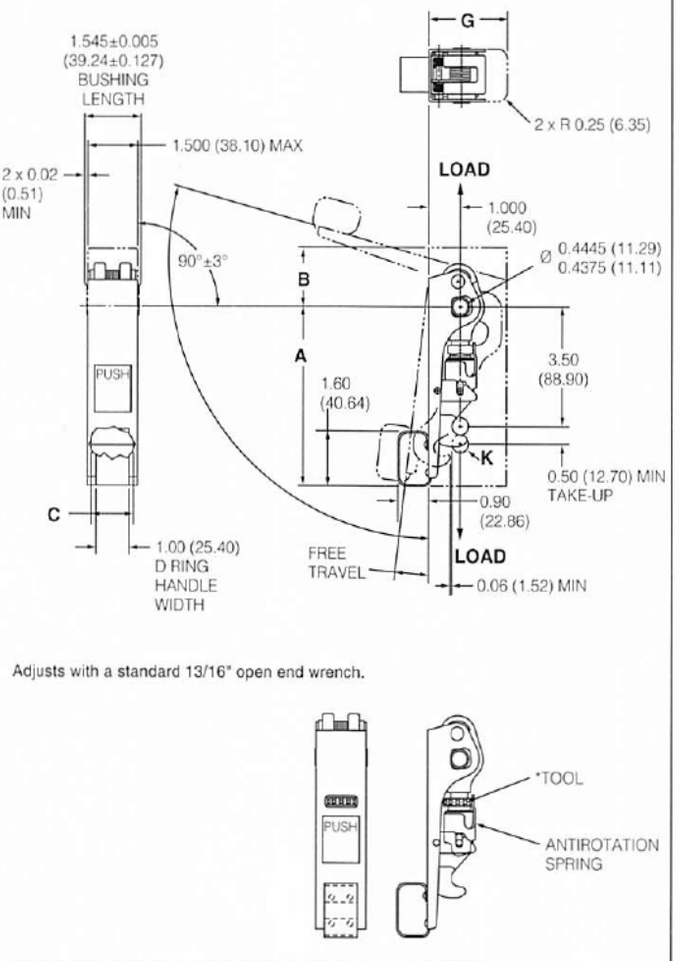 Adjusts with a standard 13/16" open end wrench. Adjusts with a 1/8" diameter rod or a 7/64" hex key wrench (-103).	Hook and Hook Base: 4330 Modified BMS 7-122/ Cadmium-Titanium Handle and Trigger: 17-7PH CRES/ Passivate	21,000 (9,525)

Dimensions specified in inches (millimeters) and pounds (kilograms).
Note: Variables may not represent the same dimensions on all series numbers.

Get quote
Angic Global Solutions 1-888-872-0690
https://www.AngicGlobal.com Sales@AngicGlobal.com

	A	B	C	D	E	F	G	H	K	Weight, lbs.	Latch Face Angle	Screw Driver Pocket	Part Number
	4.68 (118.87)	1.15 (29.21)	1.08 (27.43) Min.	1.27 (32.26)	–	–	2.34 (59.44) Max.	1.00 (25.40)	0.443 (11.25) Dia.	1.08 (.49)	As Shown	No	**TL10183-101**
	5.25 (133.35)	1.75 (44.45)	1.30 (33.02)	1.545 ± .005 (39.24)	–	–	2.4 (60.96) Max.	–	0.443 (11.25) Dia.	1.44 (.65)	As Shown	No	**TL10588-101**
										1.44 (.65)		No	**TL10588-103**

I

Get quote
Angic Global Solutions 1-888-872-0690
https://www.AngicGlobal.com Sales@AngicGlobal.com

Series	Dimensions	Material/ Finish	Ultimate Load, lbs.	
TL10622 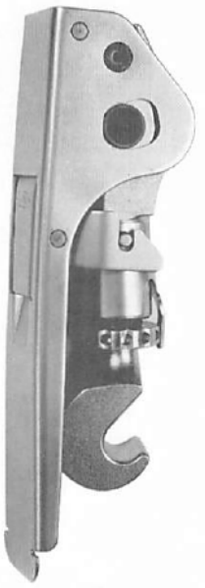	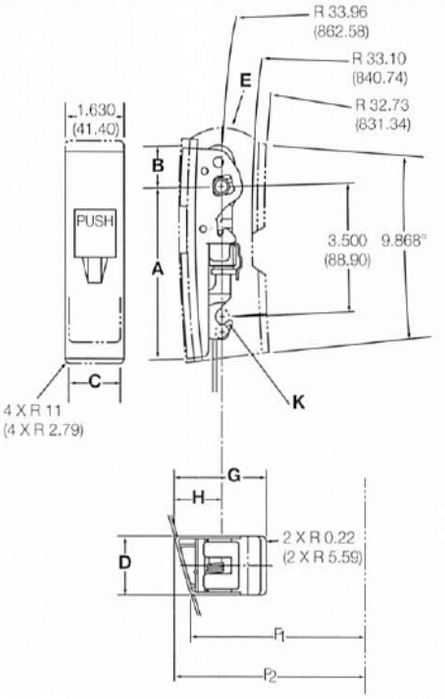 * Adjusts with a 5/8" open end wrench (-101 thru -104), a 7/64" hex key wrench or a .125 diameter pin (-105 thru -112).	Hook and Hook Base: 15-5PH CRES/Passivate Handle and Trigger: 17-7PH CRES/Passivate	15,000 (6,803)	
			16,000 (7,257)	
			17,000 (7,711)	
TL10699 	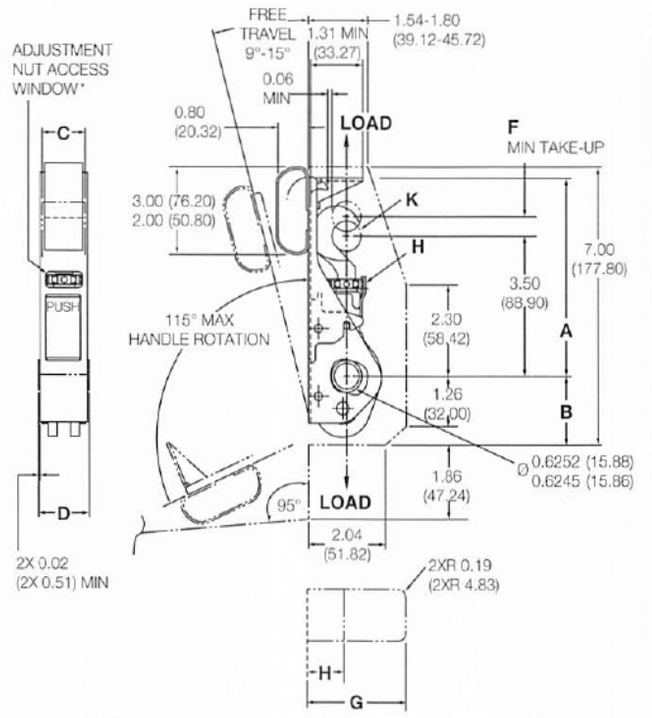 Adjusts with a 7/64" Hex Key Wrench.	Handle and Trigger: 17-7PH CRES/Passivate Hook: -101: 15-5PH CRES/ Passivate -102 & -104: 4340 M Alloy Steel/Low Embrittlement Cadmium Titanium Hook Base: -101: 15-5PH CRES/ Passivate -102 & -104: PH13-8MO CRES/Passivate	28,200 (12,791)	
		Handle and Trigger: 17-7PH CRES/ Passivate Hook: PH13-8MO CRES/Passivate Hook Base: -103: 4340 M Alloy Steel/Low Embrittlement Cadmium Titanium-105:PH 13-8MO CRES/Passivate	28,200 (12,791)	

Dimensions specified in inches (millimeters) and pounds (kilograms).
Note: Variables may not represent the same dimensions on all series numbers.

ANGIC Get quote
Angic Global Solutions 1-888-872-0690
https://www.AngicGlobal.com Sales@AngicGlobal.com

	A	B	C	D	E	F [F_2^1]	G	H	K	Weight, lbs.	Latch Face Angle	Screw Driver Pocket	Part Number
	4.62 (117.34)	1.125 (28.575)	0.85 (21.59)	1.120 (28.448)	R 1.65 (41.91)	R42.17 (1071.12) [R42.47] (1078.74)	2.66 (67.56)	1.13 (28.70)	.4370 (11.10) Dia.	1.14 (.51)	As Shown	No	**TL10622-104**
											Opposite	No	**TL10622-103**
	5.04 (128.02)	1.250 (31.75)					2.47 (62.74)	1.09 (27.69)			As Shown	Yes	**TL10622-107** **TL10622-111***
											Opposite		**TL10622-108** **TL10622-112***
	4.55 (115.57)	1.094 (27.79)	1.43 (36.32	1.63 (41.40	R 1.61 (40.89)	R34.683 (880.95) [R35.113] (891.87)	2.66 (67.56)	1.13 (28.70)	.4370 (11.10) Dia.	1.23 (.55)	As Shown	No	**TL10622-101**
	5.01	1.27	1.45					1.16				Yes	**TL10622-105** **TL10622-109***
	4.67 (118.62)	1.125 (28.58)	1.45 (36.83)	1.63 (41.40	R 1.68 (42.67)	R42.10 (1069.34) [R42.54] (1080.52)	2.72 (69.09)	1.19 (30.23)	.4370 (11.10) Dia.	1.26 (.57)	As Shown	No	**TL10622-102**
	5.05 (128.27)	1.23 (31.24)					2.78 (70.61)	1.22 (31.99)				Yes	**TL10622-106** **TL10622-110**
	4.97 (126.24)	1.75 (44.45) Max.	1.10 (27.94)	1.27 (32.26)	–	0.50 (12.7) 0.22 (5.59)	2.60 (66.04)	1.00 (25.40)	.1485 (3.77) Dia.	2.00 (.90) Max.	As Shown	No	**TL10699-101** **TL10699-102** **TL10699-104**
	4.97 (126.24)	1.75 (44.45) Max.	1.10 (27.94)	1.27 (32.26)	–	0.22 (5.59)	2.86 (72.64)	1.26 (32.00)	.7485 (19.01) Dia.	2.00 (.90) Max.	As Shown	No	**TL10699-103** **TL10699-105**

*Minimum torque of 8 inch-pounds is required to turn adjustment bushing.

Get quote
Angic Global Solutions 1-888-872-0690
https://www.AngicGlobal.com Sales@AngicGlobal.com

Series	Dimensions	Material/ Finish	Ultimate Load, lbs.
TL10700 Contoured 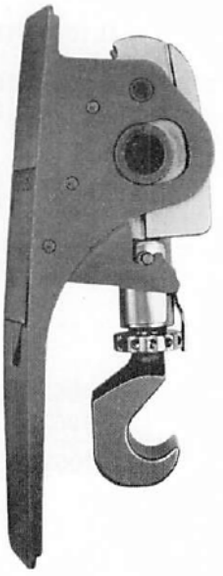	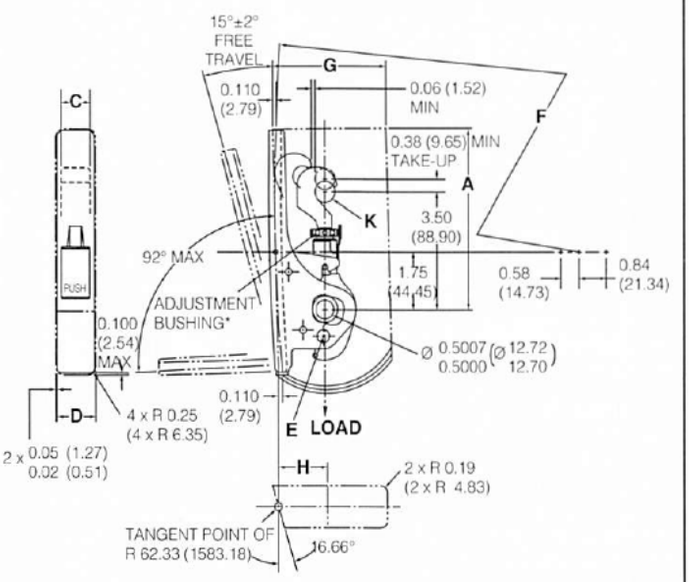 Adjusts with a 7/16" Hex Key Wrench.	Hook and Hook Base: 15-5PH CRES/Passivate Handle and Trigger: 17-4PH CRES/Passivate	18,250 (8,278)
TL10703 Remote Actuating 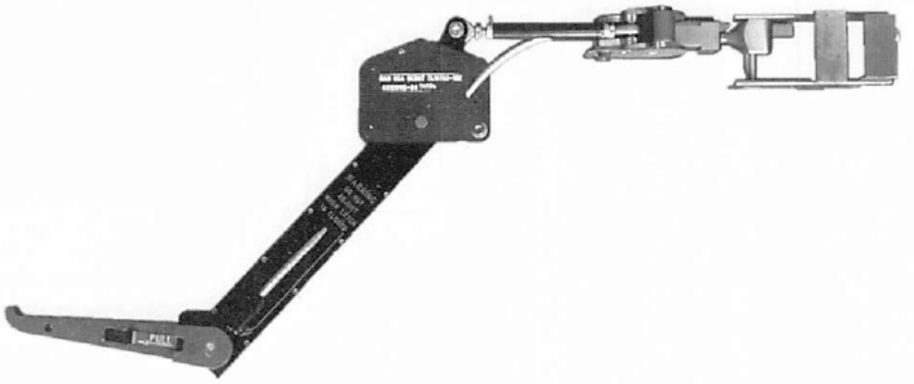		Hook and Hook Base: 15-5PH CRES/ Passivate Trigger, Handle Cover, Mounting Plate, Connecting Rod & Swing Arm: 7075-T6 Aluminum/ Anodize	17,500 (7,937)

Dimensions specified in inches (millimeters) and pounds (kilograms).
Note: Variables may not represent the same dimensions on all series numbers.

Get quote
Angic Global Solutions 1-888-872-0690
https://www.AngicGlobal.com Sales@AngicGlobal.com

A	B	C	D	E	F	G	H	K	Weight, lbs.	Latch Face Angle	Screw Driver Pocket	Part Number
5.45 (138.43)	–	.90 (22.86)	1.27 (32.26)	R2.44 (61.98)	R62.33 (1583.18)	3.59 (91.19) Max.	1.57 (39.88)	.264 (6.71) Dia.	1.59 (.72)	As Shown	Yes	**TL10700-101**
										Opposite		**TL10700-102**
									4.37 (1.36)	As Shown	No	**TL10703-102**

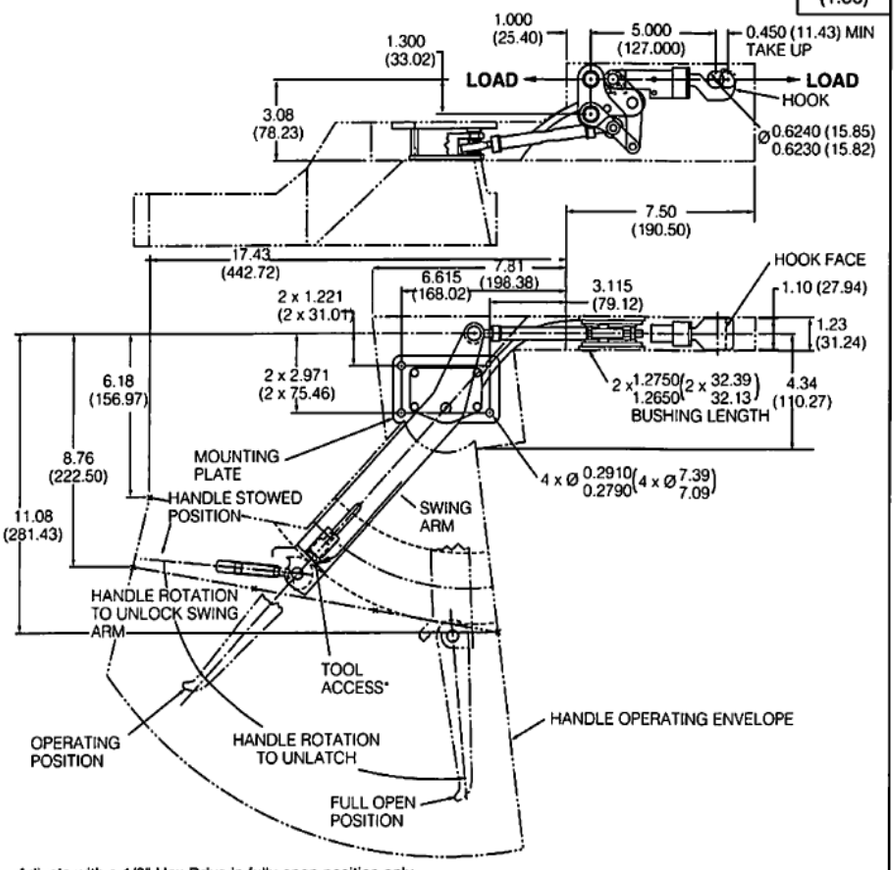

Adjusts with a 1/8" Hex Drive in fully open position only.

Series	Dimensions
TL10068 Adjustable 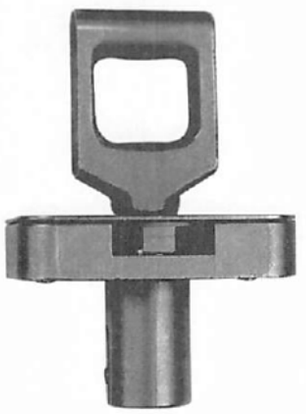	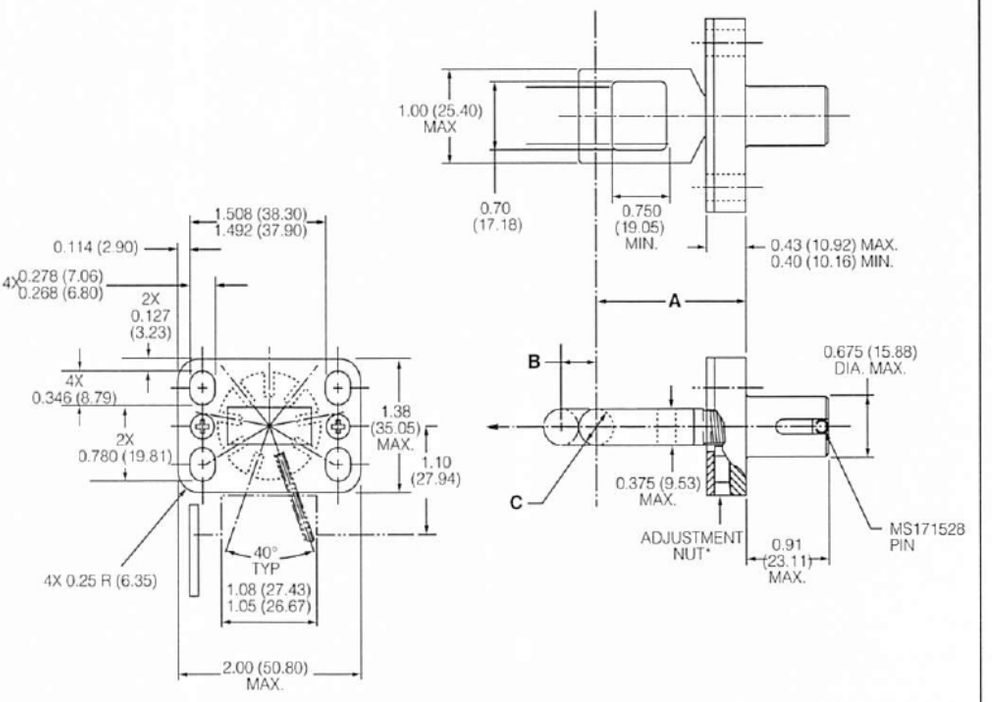 * Adjusts with a standard a 9/64" allen type hex wrench wrench.
TL10163 Adjustable 	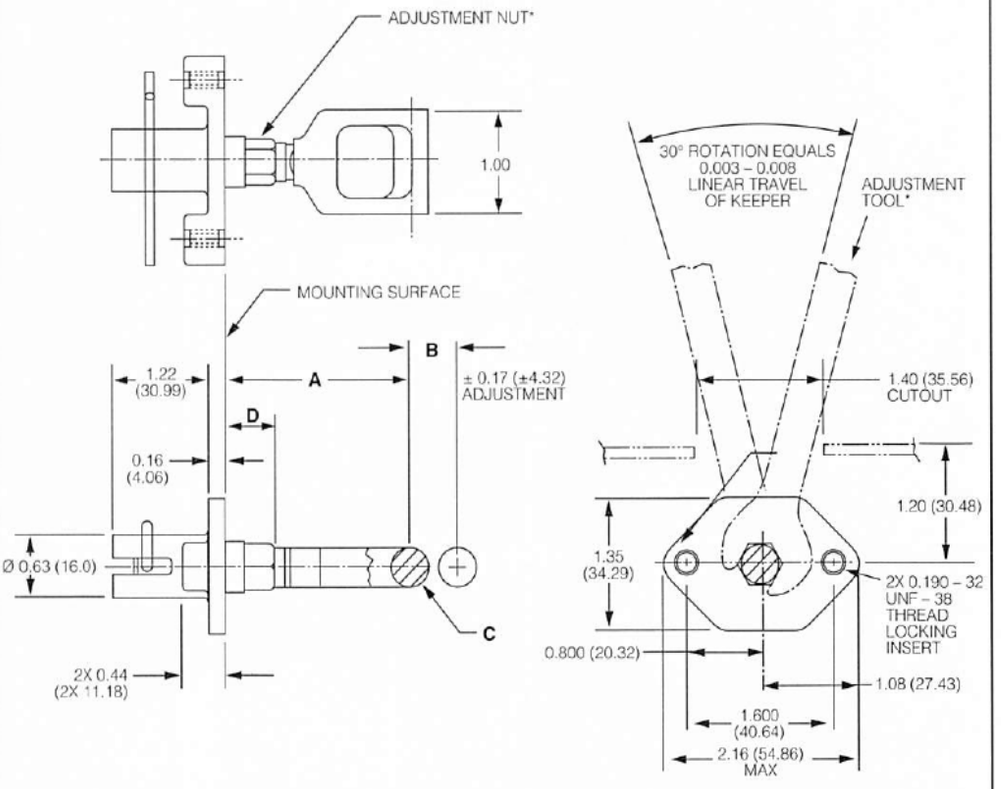 * Adjusts with a 7/16" open end wrench (-101 & -103), a 9/16" open end wrench (-102).

Dimensions specified in inches (millimeters), pounds (kilograms).
Note: Variables may not represent the same dimensions on all series numbers.

Get quote
Angic Global Solutions 1-888-872-0690
https://www.AngicGlobal.com Sales@AngicGlobal.com

Material/ Finish	Ultimate Load, lbs.	A	B	C	D	E	Weight, lbs.	Part Number
Keeper: 4340M CRES/ Passivate Plate: 17-4PH CRES/ Passivate Bracket and Starwheel: 17-4PH CRES/ Passivate Adjustment Nut: 15-5PH CRES/ Passivate	12,000 (5,443)	1.830 (46.48)	.370 (9.40) Min.	.370 (9.40) Dia.	–	–	.48 (.21)	**TL10068-102**
	17,000 (7,711)	1.650 (41.91)	.370 (9.40) Min.	.370 (9.40) Dia.	–	–	.48 (.21)	**TL10068-103**
Keeper: -101: 17-4PH CRES/ Passivate	16,000 @ 450° F (7,257 @232.22 C°)	1.83 (63.25)	.34 (8.64)	.370 (9.40) Dia.	.68 (17.27)	–	.36 (.16)	**TL10163-101**
-102 and -103: 300M Steel/ Cadmium-Titanium Plated		2.03 (51.56)			.74 (18.80)		.42 (.19)	**TL10063-102**
Housing: 17-4PH CRES/ Passivate		2.49 (63.25)					.38 (.17)	**TL10163-103**

I

Get quote
Angic Global Solutions 1-888-872-0690
https://www.AngicGlobal.com Sales@AngicGlobal.com

Series	Dimensions
TL10181 **Adjustable** 	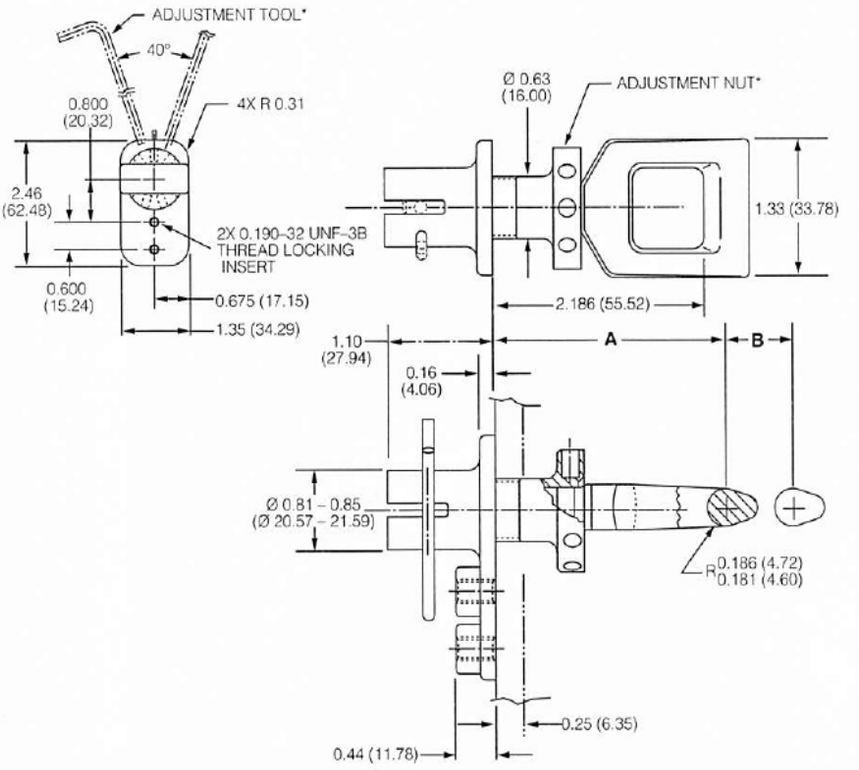 * Adjusts with a standard 9/64" Hex wrench.
TL10184 **Vertical Adjustment** 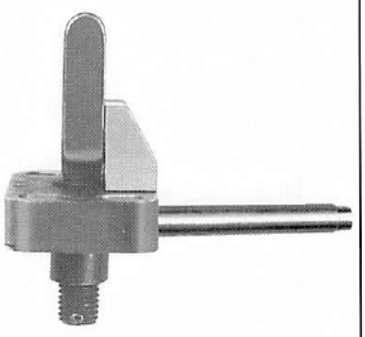	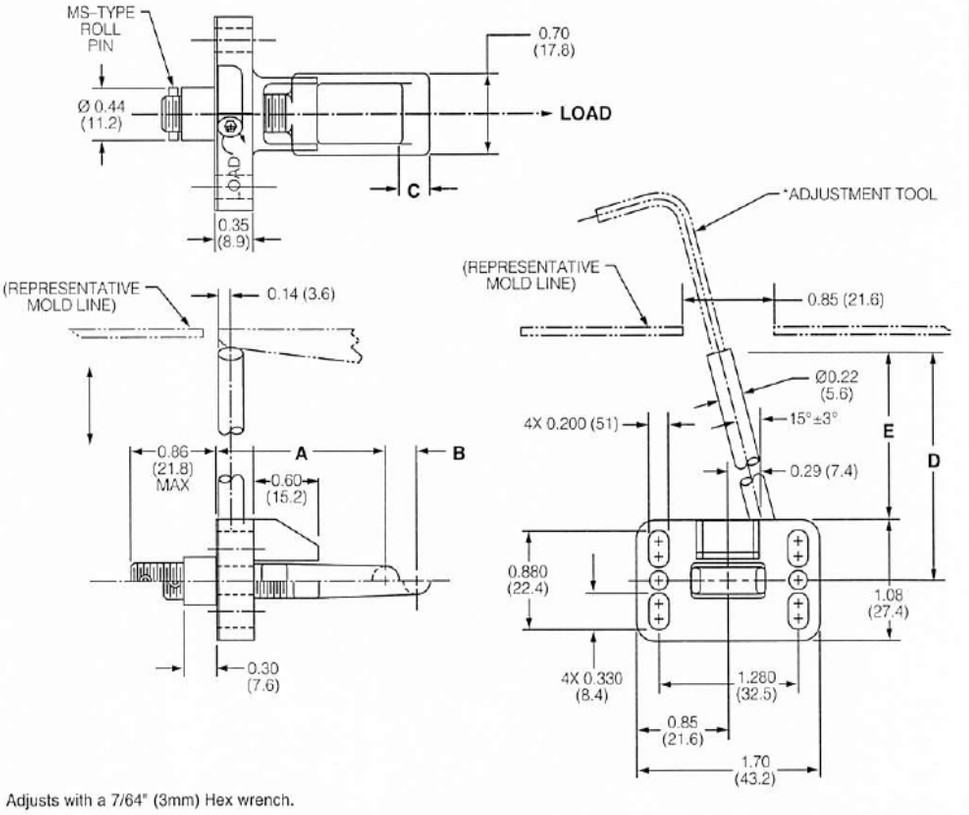 * Adjusts with a 7/64" (3mm) Hex wrench.

Dimensions specified in inches (millimeters), pounds (kilograms).
Note: Variables may not represent the same dimensions on all series numbers.

ANGIC
Get quote
Angic Global Solutions 1-888-872-0690
https://www.AngicGlobal.com Sales@AngicGlobal.com

Material/ Finish	Ultimate Load, lbs.	A	B	C	D	E	Weight, lbs.	Part Number
Keeper: 300M Steel/ Low Embrittlement Cadmium-Titanium Plated Housing: 17-4PH/ Passivate	17,700 (8,028)	2.37	.30 (60.20)	–	–	–	.49 (.22)	**TL10181-101**
Keeper and Housing: 17-4PH CRES/ Passivate	3,000 (1,360)	1.05 (26.67)	.40 (10.16)	.305 (7.75) Dia.	.54 (13.72)	0.0	.30 (.14)	**TL10184-101**
Adjustment Nut: 17-4PH CRES/ Passivate		1.56 (09.62)	.30 (7.62)	.238 - .248 (6.05 - 6.30) Dia.	2.00 (50.80)	1.46 (37.08)	.20 (.09)	**TL10084-102**
	5,000 (2,267)	1.56 (39.62)	.30 (7.62)	.238 - .248 (6.05 - 6.30) Dia.	.54 (.3.72)	0.0	.20 (.09)	**TL10184-103**

Get quote
Angic Global Solutions 1-888-872-0690
https://www.AngicGlobal.com Sales@AngicGlobal.com

Series	Dimensions
TL10189 **Adjustable Anti-Rotation** 	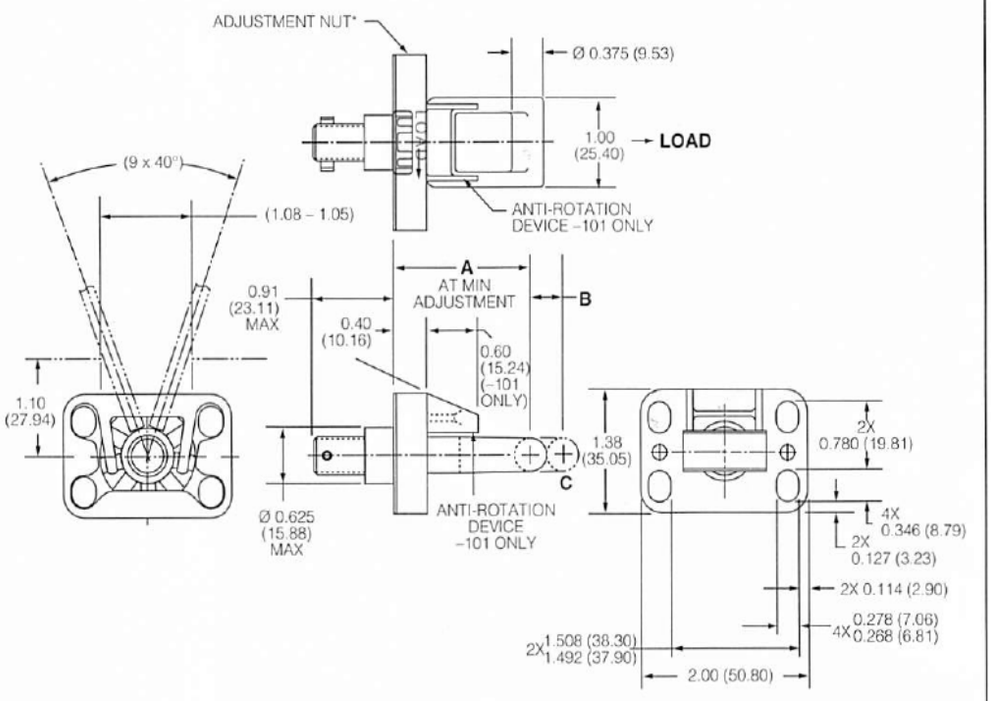 * Adjusts with a 7/64" (3mm) Hex wrench.
TL10190 **Adjustable** 	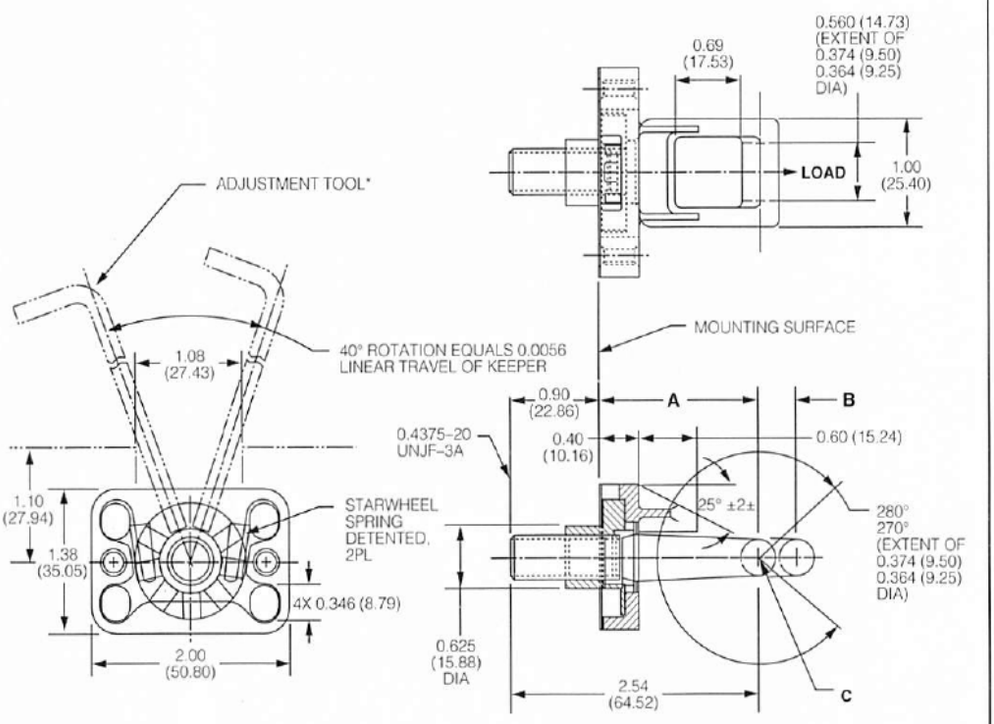 * Adjusts with a long series 5/32" (4mm) Hex wrench.

Dimensions specified in inches (millimeters), pounds (kilograms).
Note: Variables may not represent the same dimensions on all series numbers.

Get quote

Angic Global Solutions 1-888-872-0690
https://www.AngicGlobal.com Sales@AngicGlobal.com

Material/ Finish	Ultimate Load, lbs.	A	B	C	D	E	Weight, lbs.	Part Number
Housing and Starwheel: 17-4PH CRES/ Passivate Keeper: (-101 and -102): 17-4PH/ Passivate; -103 thru -105: 4340 M Steel	10,000 (4,535)	1.65 (41.91)	.37 (9.40)	0.375 (9.53) Dia.	–	–	.35 (.16)	**TL10189-101** **TL10189-102**
	12,000 (5,443)	1.90 (48.26)	.37 (9.40)	0.375 (9.53) Dia.	–	–	.50 (.23)	**TL10189-104**
	15,000 (6,803)	1.65 (41.91)	.37 (9.40)	0.375 (9.53) Dia.	–	–	.50 (.23)	**TL10189-103**
	17,000 (7,711)	1.65 (41.91)	.37 (9.40)	0.375 (9.53) Dia.	–	–	.50 (.23)	**TL10189-105**
Keeper and Starwheel: 17-4PH CRES/ Passivate Housing: 17-4PH CRES/ Passivate	10,000 (4,535)	1.64 (41.66)	.37 (9.40) Min.	.370 (9.398) Dia.	–	–	.40 (.18)	**TL10190-101**

Get quote
Angic Global Solutions 1-888-872-0690
https://www.AngicGlobal.com Sales@AngicGlobal.com

Series	Dimensions
TL10191 **Vertical Access Safe Load**	



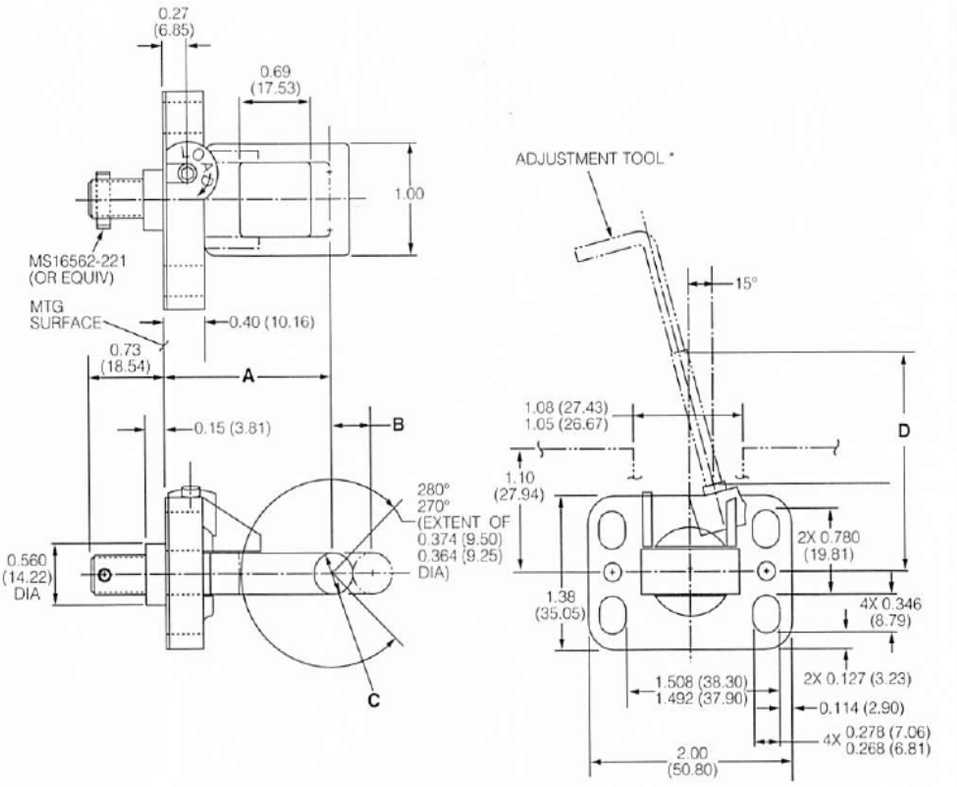

TL10400 **TL10401** **TL10402**	



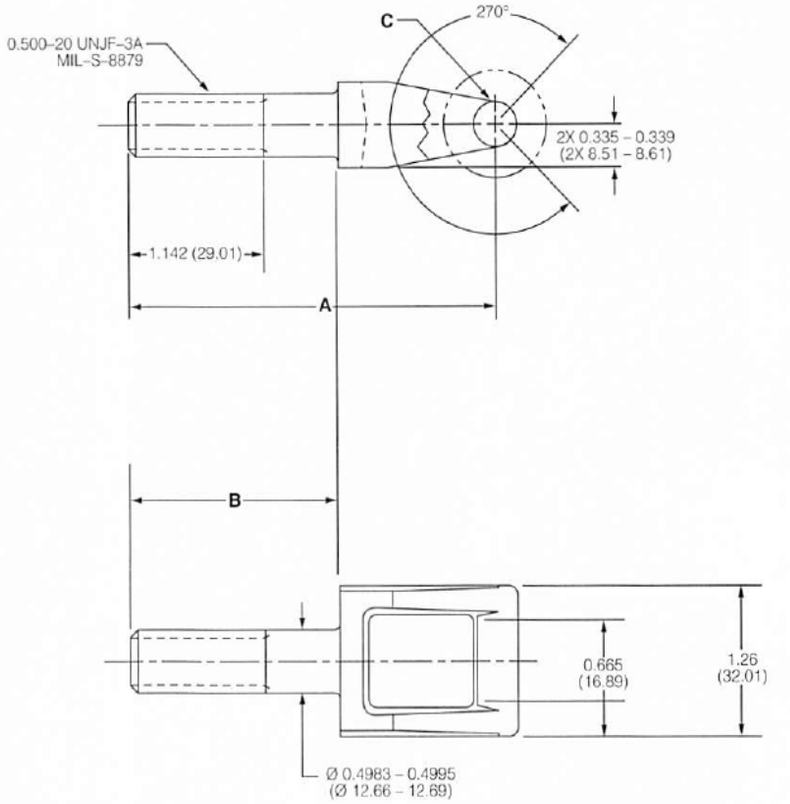

Dimensions specified in inches (millimeters), pounds (kilograms).
Note: Variables may not represent the same dimensions on all series numbers.

Get quote
Angic Global Solutions 1-888-872-0690
https://www.AngicGlobal.com Sales@AngicGlobal.com

Material/ Finish	Ultimate Load, lbs.	A	B	C	D	E	Weight, lbs.	Part Number
Housing, Shaft, Adjustment Nut and Keeper: 17-4PH CRES/ Passivate Drive: 17-4PH CRES/ Passivate	10,000 (4,535)	1.64 (41.66)	.37 (9.40) Min.	0.370 (9.398) Dia.	.78 (17.78)	–	.43 (.19)	**TL10191-101**
4140 Alloy Steel/ Cadmium Plate	8,050 (3,651)	3.111 (79.02)	1.772 (45.009)	0.370 (9.398) Dia.	–	–	.29 (.13)	**TL10400-101**
	10,131 (4,595)	3.346 (84.99)	2.007 (50.978)					**TL10400-102**
	10,131 (4,595)	3.162 (80.31)	1.393 (35.38)	0.370 (9.398) Dia.	–	–	.29 (.13)	**TL10401-102**
	16,240 (7,366)	3.005 (76.33)	1.268 (32.21)					**TL10401-101**
	7,550 (3,424)	3.346 (84.99)	1.772 (45.01)	0.370 (9.398) Dia.	–	–	.29 (.13)	**TL10402-101**

Get quote
Angic Global Solutions 1-888-872-0690
https://www.AngicGlobal.com Sales@AngicGlobal.com

Series	Dimensions
TL10409 Adjustable 	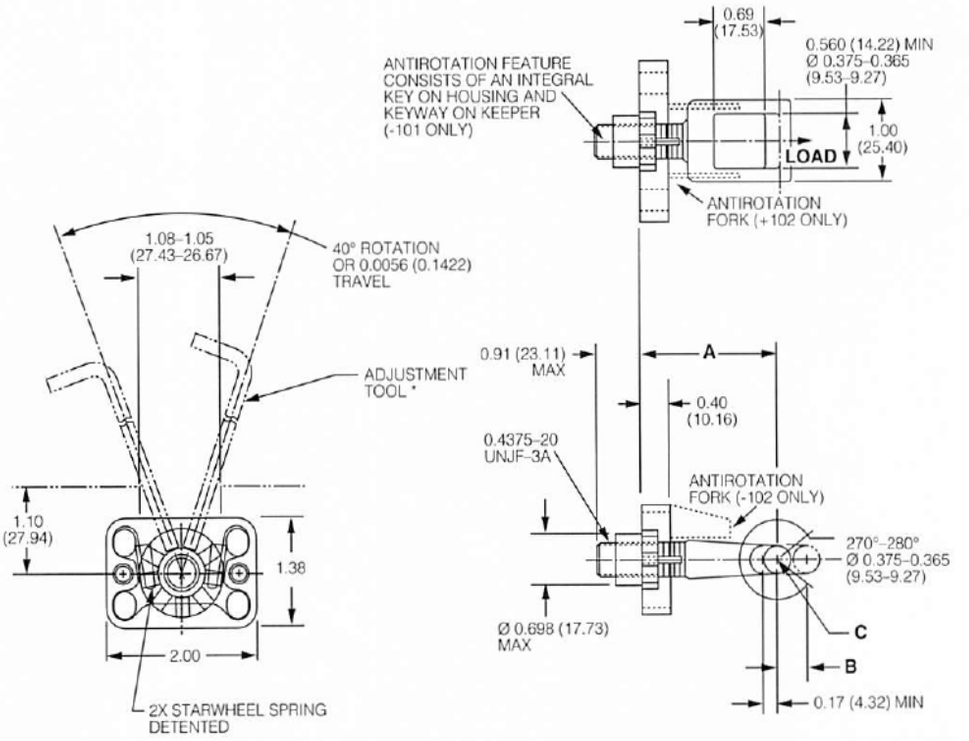 * Adjusts with a long series 5/32" (4mm) Hex wrench.
TL10601 For Use Exclusively With TL10601-101 or -102 Hook Latches 	Adjustment Nut 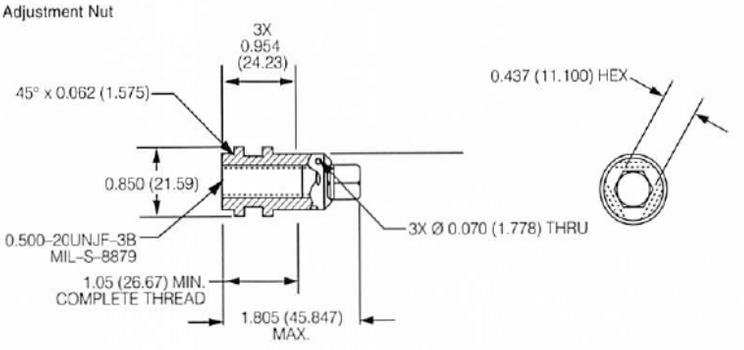 Eye Bolt 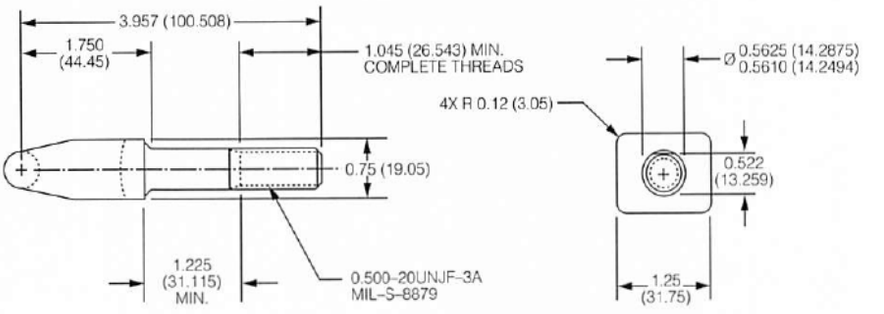

Dimensions specified in inches (millimeters), pounds (kilograms).
Note: Variables may not represent the same dimensions on all series numbers.

Get quote
Angic Global Solutions 1-888-872-0690
https://www.AngicGlobal.com Sales@AngicGlobal.com

Material/ Finish	Ultimate Load, lbs.	A	B	C	D	E	Weight, lbs.	Part Number
Housing, Starwheel and Keeper: 17-4PH CRES/ Passivate	10,000 (4,535)	1.90 (48.26)	.37 (9.40) Min.	0.370 (9.398) Dia.	–	–	.38 (9.65) Max.	**TL10409-101 (Anti-Rotation Fork)** **TL10409-102 (Anti-Rotation Fork)**
Eye Bolt and Nut: A286/Passivate	15,000 (6,803)	–	–	–	–	–	.13 (.06)	**TL10601-201**
		–	–	–	–	–	.38 (.17)	**TL10601-301**

ANGIC
Get quote
Angic Global Solutions 1-888-872-0690
https://www.AngicGlobal.com Sales@AngicGlobal.com

Series	Dimensions

TL10704
Low Profile Latch

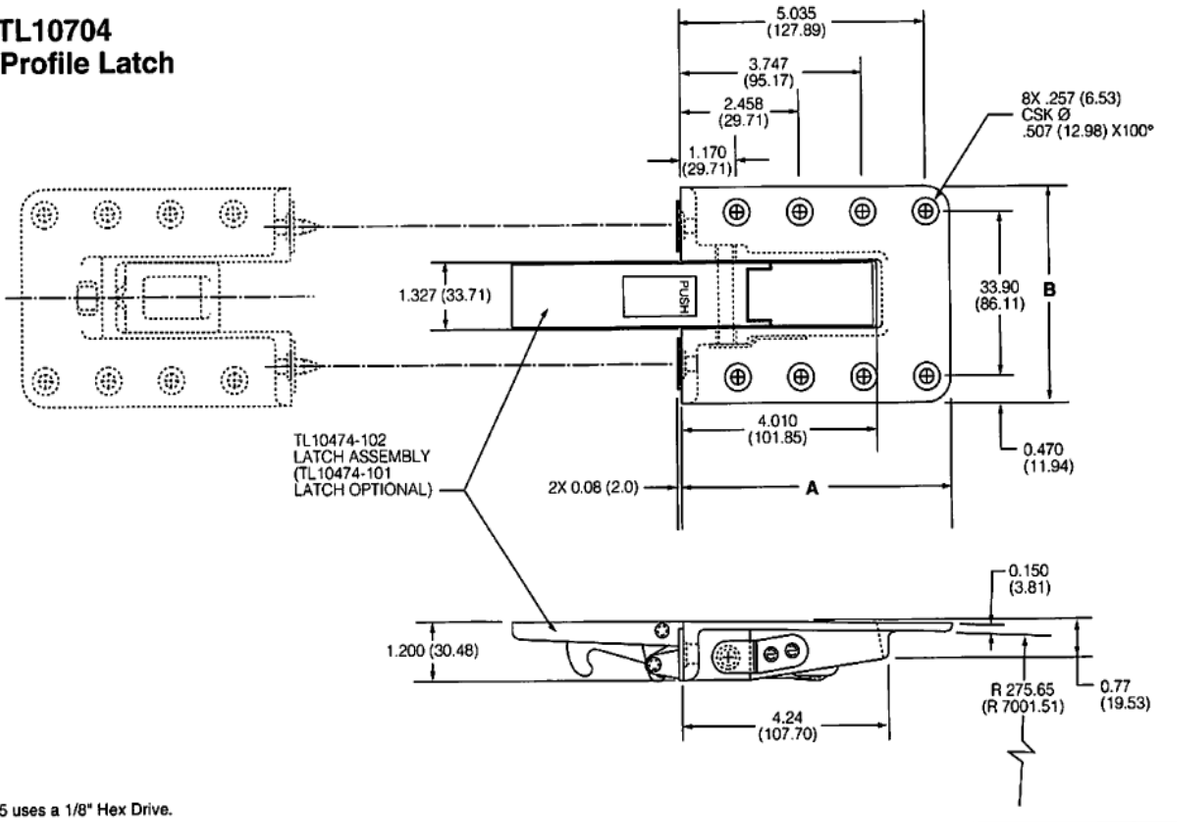

Adjustment of ± .15 uses a 1/8" Hex Drive.

TL10705
Adjustable Keeper

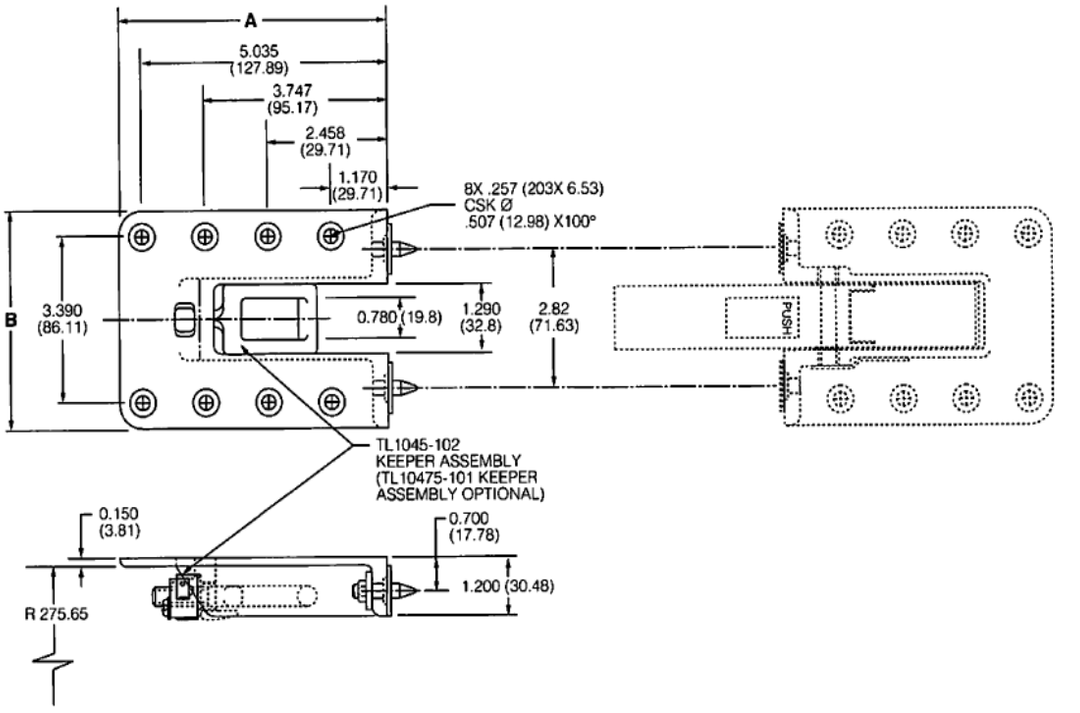

**Adjustment Bushing uses a 7/64" allen wrench.

Dimensions specified in inches (millimeters) and pounds (kilograms).
Note: Variables may not represent the same dimensions on all series numbers.

Get quote
Angic Global Solutions 1-888-872-0690
https://www.AngicGlobal.com Sales@AngicGlobal.com

Material/ Finish	Ultimate Load, lbs.	A	B	Weight, lbs.	Part Number
Fitting: 7075-T73 Aluminum Alloy/ Anodize Latch Materials: 17-4PH CRES Investment Casting/ Passivate	12,000 (5,443)	5.535 (140.59)	4.330 (109.98)	2.1 (.952) Max.	**TL10704-102**
Fitting: 7075-T73 Aluminum/ Alloy Anodize Keeper: 17-4PH CRES Investment Casting/ Passivate	12,000 (5,443)	5.535 (140.59)	4.330 (109.98)	1.75 (.793) Max.	**TL10475-102**

Get quote
Angic Global Solutions 1-888-872-0690
https://www.AngicGlobal.com Sales@AngicGlobal.com

Series	Dimensions	Material/ Finish
TL22013 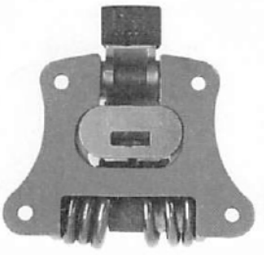	Integral Bolt Bearing Pad. 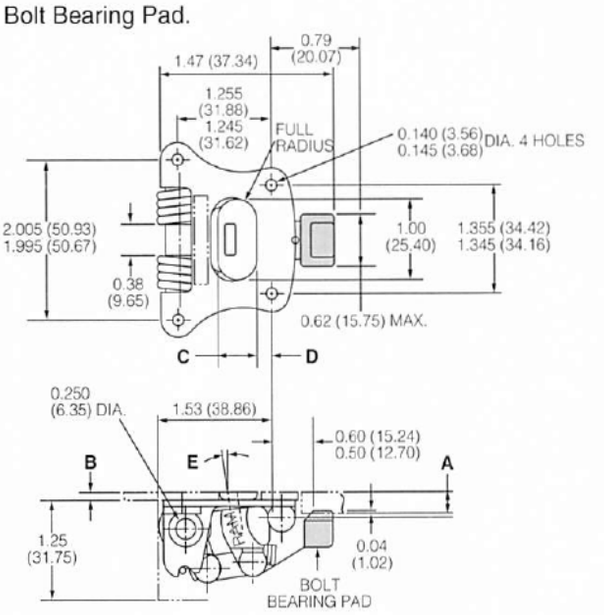	Bracket, Bolt & Link: 17-4PH CRES/Passivate Spacer: 304 W Stainless Steel Springs: 17-7PH CRES/Passivate
	Replaceable Bolt Bearing Pad. 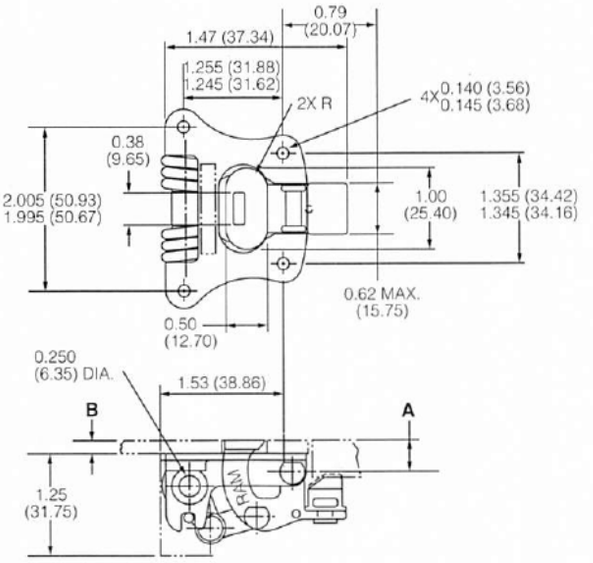	Bracket Bolt and Link: 17-4PH CRES/Passivate Spacer: 304 W Stainless Steel Springs: 17-7PH CRES/Passivate
	Non-padded Bolt Bearing Surface. 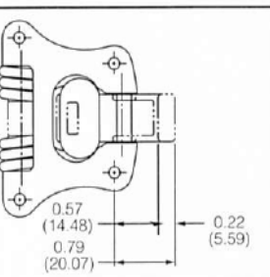	Bolt Bearing Surface Finish: Dry Film, Lubed - per MIL-L-46010 Type 1

Dimensions specified in inches (millimeters) and pounds (kilograms).
Note: Variables may not represent the same dimensions on all series numbers.

Get quote
Angic Global Solutions 1-888-872-0690
https://www.AngicGlobal.com Sales@AngicGlobal.com

Release Load, lbs.	A-Door FrameThickness	B Door Thickness	C	D	E	Weight lbs.	Part Number
50 (22)	0.220 (5.588)	0.100 - 0.110 (2.540 - 2.79)	0.50 (12.70)	0.210 - 0.205 (5.33 - 5.08)	8°	0.25 (0.11)	**TL22013-105**
		0.145 - 0.155 (3.683 - 3.937)					**TL22013-107**
55 (25)	0.220 (5.588)	0.100 - 0.110 (2.540 - 2.79)	0.440 (11.18)	0.265 ± 0.005 (6.73 ± 0.152)			**TL22013-106**
90 (41)	0.220 (5.588)	0.100 - 0.110 (2.540 - 2.79)			3°		**TL22013-102**
		0.145 - 0.1555 (3.683 - 3.937)					**TL22013-108**
108 (49)	0.220 (5.588)	0.100 - 0.110 (2.540 - 2.79)	0.50 (12.70)	0.210 - 0.205 (5.33 - 5.08)	8°		**TL22013-103**
	0.250 (6.350)						**TL22013-114**
50 (22)	0.310 (7.874)	0.155 - 0.165 (3.937 - 4.191)	0.50 (12.70)	0.210 - 0.205 (5.33 - 5.08)	0° to 8°	0.25 (0.11)	**TL22013-111**
	0.205 (5.21)	0.145 - 0.1555 (3.683 - 3.937)					**TL22013-113**
55 (25)	0.240 (6.096)	0.135 - 0.145 (3.429 - 3.683)				0.28 (0.13) Max.	**TL22013-117**
128 (58)	0.220 (5.588)	0.100 - 0.110 (2.540 - 2.79)					**TL22013-104**
131 (59)	0.205 - 0.395 (6.35 - 10.003)	0.120 - 0.130 (3.048 - 3.302)					**TL22013-112**
150 (68)	0.220 (5.588)	0.100 - 0.110 (2.540 - 2.794)					**TL22013-101**
	0.395 (10.033)						**TL22013-109**
	0.250 (6.350)						**TL22013-110**
82	0.220 (5.588)	0.100 - 0.110 (2.540 - 2.79)	0.50 (12.70)	0.210 - 0.205 (5.33 - 5.08)	8°	0.25 (0.11)	**TL22013-115**

Get quote
Angic Global Solutions 1-888-872-0690
https://www.AngicGlobal.com Sales@AngicGlobal.com

Series	Dimensions	Material/ Finish
TL22028 Roller Detent 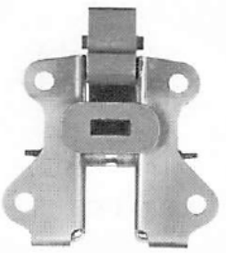	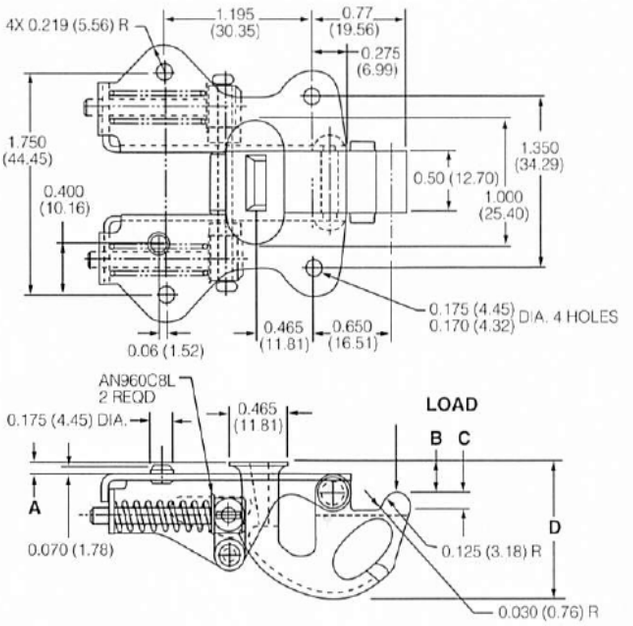	Bracket: 301 CRES/Passivate Bolt: 17-7PH CRES/Passivate
TL22070 High Temperature* 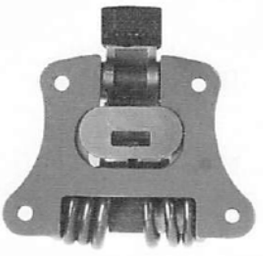	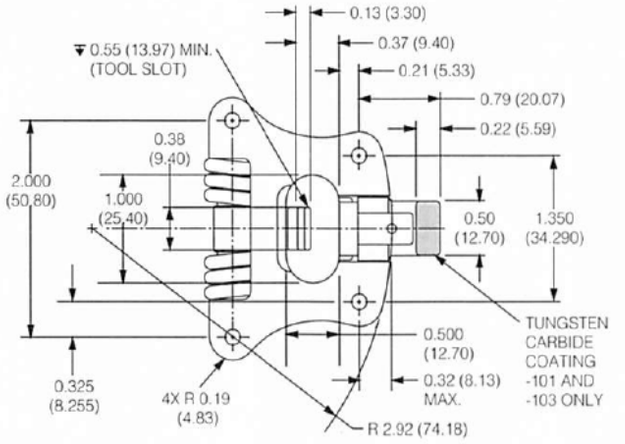 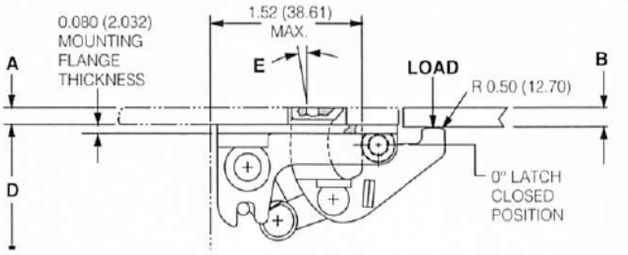 *Load at room temperature; call for elevated temperature loads.	Bracket Bolt, Link and Crank: 718 Nickel Alloy/ Solid Film Lube Springs: 17-7Alloy Passivate/ Solid Film Lube With Tungsten Carbide Coating On Bolt Bearing Surface

Dimensions specified in inches (millimeters) and pounds (kilograms).
Note: Variables may not represent the same dimensions on all series numbers.

Get quote
Angic Global Solutions 1-888-872-0690
https://www.AngicGlobal.com Sales@AngicGlobal.com

Release Load, lbs.	A-Door FrameThickness	B Door Thickness	C	D	E	Weight lbs.	Part Number
56 (25)	0.100 ± 0.010 (2.540 ± 0.254)	0.160 ± 0.010 (4.064 ± 0.254)	0.125 ± 0.010 (3.175 ± 0.254)	1.057 (26.848) Max.	–	0.25 (0.113) Max.	**TL22028-105**
80 (36)	0.063 ± 0.010 (1.600 ± 0.254)	0.140 ± 0.010 (3.556 ± 0.254)	0.125	1.077 (27.356) Max.			**TL22028-103**
138 (63)	0.100 ± 0.010 (2.540 ± 0.254)	0.310 ± 0.010 (7.874 ± 0.254)	0.80 ± 0.010 (2.032 ± 0.254)	1.057 (26.848) Max.			**TL22028-101**
143 (65)	0.150 (3.81)	0.270 (6.858)	–	1.25 (31.75)	0° - 8°	0.30 (0.14)	**TL22070-102**
119 (54)							**TL22070-104**
185 (84)	0.180 (4.572)	0.210 (5.334)	–	1.25 (31.75)	0° - 8°	0.38 (0.17)	**TL22070-101**
155 (70)							**TL22070-103**

Get quote
Angic Global Solutions 1-888-872-0690
https://www.AngicGlobal.com Sales@AngicGlobal.com

Series	Dimensions	Material/ Finish
TL22071 Thick Door 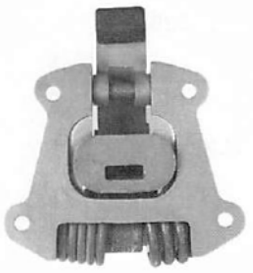	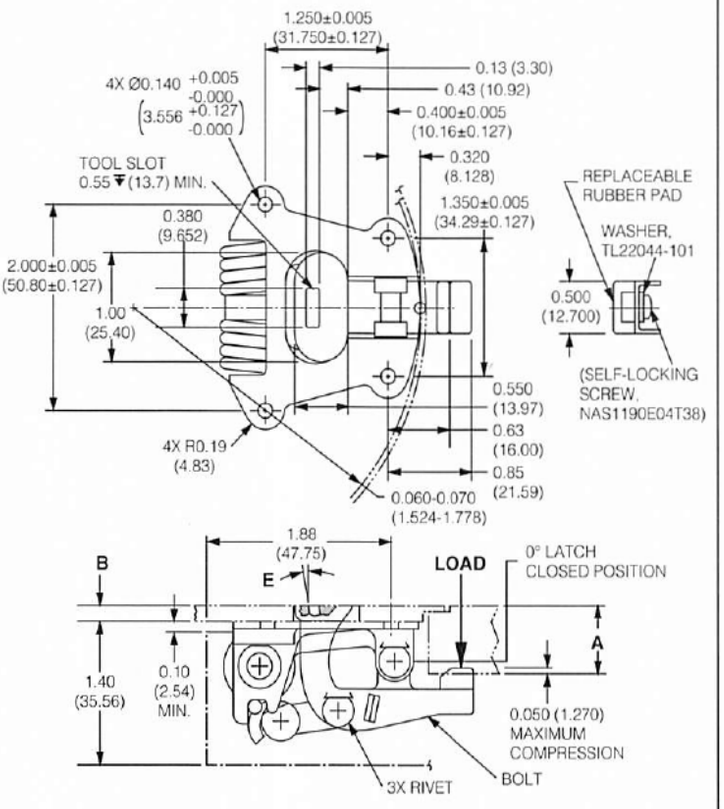 Contoured 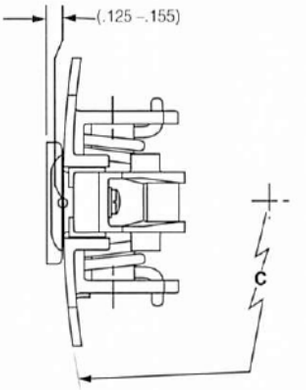 Same as above except as noted.	Bracket, Bolt, Link and Crank: 17-4PH CRES/Solid Film Lube Springs: 17-7 Alloy/Passivate

Dimensions specified in inches (millimeters) and pounds (kilograms).
Note: Variables may not represent the same dimensions on all series numbers.

Get quote
Angic Global Solutions 1-888-872-0690
https://www.AngicGlobal.com Sales@AngicGlobal.com

Release Load, lbs. ± 10%	A-Door FrameThickness	B Door Thickness	C	D	E	Weight lbs.	Part Number
116 (53)	0.590 - 0.610 (14.986 - 15.494)	0.120 - 0.130 (3.048 - 3.302)	–	–	8°	0.35 (0.158) Max.	**TL22071-103**
136 62	0.656 ± 0.045 (16.662 ± 1.143)						**TL22071-101**
59 (27)	0.2455 ± 0.2825 (6.2357 ± 7.1855)	0.125 - 0.155 (3.175 - 3.937)	R17.6 ± 0.50 (447.04±12.70)	–	8°	0.30 (0.14)	**TL22071-104**
92 (42)			R39.70 ± 0.50 (1008.38±12.70)				**TL22071-102**

Get quote
Angic Global Solutions 1-888-872-0690
https://www.AngicGlobal.com Sales@AngicGlobal.com

Series	Dimensions	Material/ Finish
TL18086 **Heavy Duty** 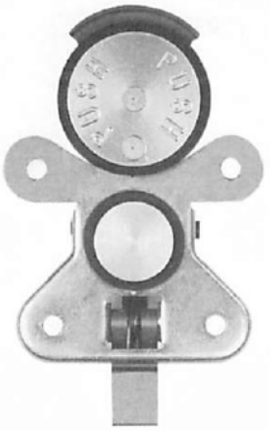	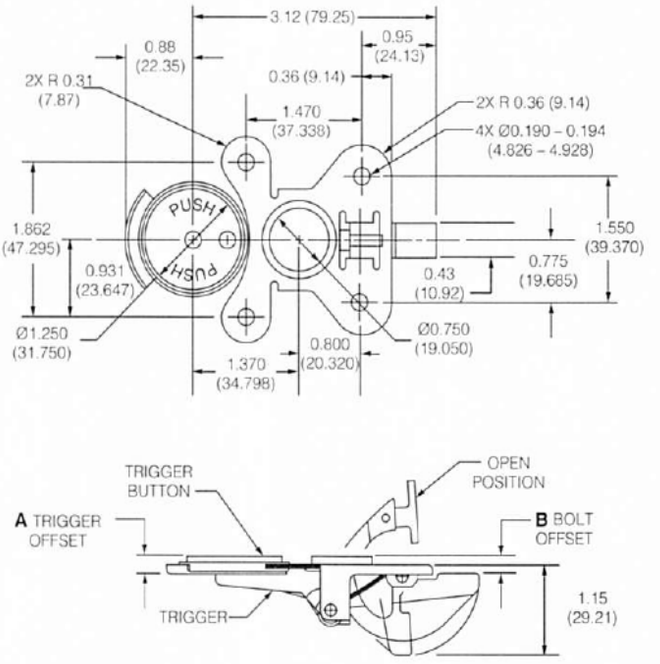	Bracket: 4130 Steel Cadmium Plated Trigger: 302 CRES/Passivate Springs: 17-7PH CRES/Passivate
TL18089 **Flush Button** 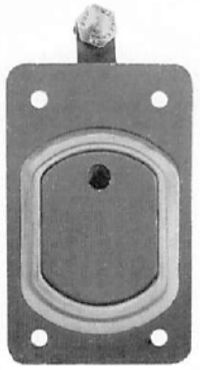	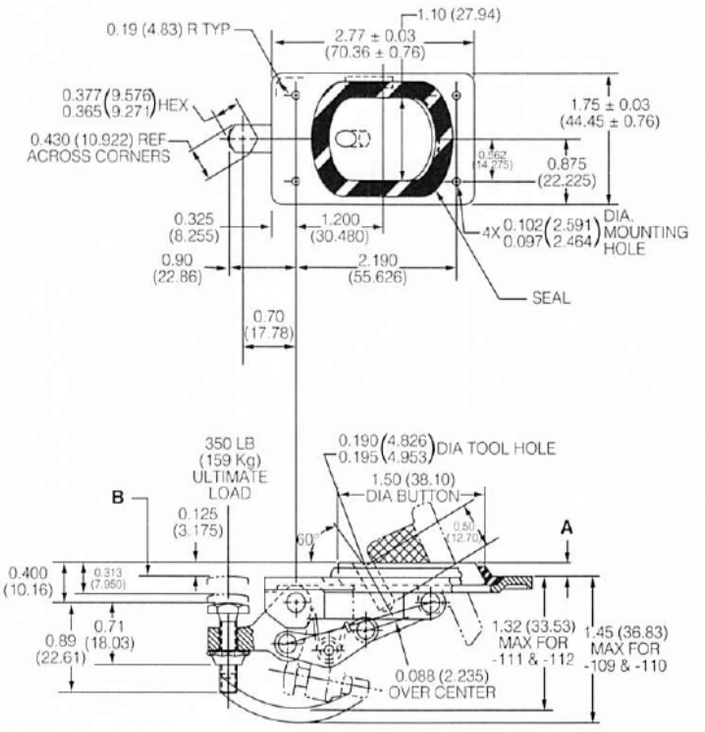	Bracket and Button: A-380 Aluminum Alloy/ Anodize Bolt Assembly: 2024-T4 Aluminum Alloy/ Anodize Spring: 17-7PH CRES/Passivate Seal: Silicon Rubber

Dimensions specified in inches (millimeters) and pounds (kilograms).
Note: Variables may not represent the same dimensions on all series numbers.

Get quote
Angic Global Solutions 1-888-872-0690
https://www.AngicGlobal.com Sales@AngicGlobal.com

Ultimate Load, lbs.	Weight lbs.	Mounting Holes	A Door FrameThickness	B Door Thickness	Part Number
500 (227)	0.13 (0.059) Max.	As Shown	0.025 (0.635)	0 to 0.312 (0 to 7.925)	**TL18086-025-[*]**
			0.032 (0.813)	0 to 0.319 (0 to 8.103)	**TL18086-032-[*]**
			0.040 (1.016)	0 to 0.327 (0 to 8.306)	**TL18086-040-[*]**
			0.050 (1.270)	0 to 0.337 (0 to 8.600)	**TL18086-050-[*]**
			0.063 (1.600)	0 to 0.350 (0 to 1.270)	**TL18086-063-[*]**
			0.071 (1.803)	0 to 0.358 (0 to 9.093)	**TL18086-071-[*]**
			0.080 (2.032)	0 to 0.367 (0 to 9.322)	**TL18086-080-[*]**
			0.090 (2.286)	0 to 0.377 (0 to 9.576)	**TL18086-090-[*]**
			0.100 (2.540)	0 to 0.387 (0 to 9.830)	**TL18086-100-[*]**
			0.112 (2.845)	0 to 0.399 (0 to 10.135)	**TL18086-112-[*]**
			0.125 (3.175)	0 to 0.412 (0 to 10.465)	**TL18086-125-[*]**
			0.142 (3.607)	0 to 0.429 (0 to 10.897)	**TL18086-142-[*]**
			0.156 (3.902)	0 to 0.443 (0 to 11.252)	**TL18086-156-[*]**
			0.188 (4.775)	.024 to 0.475 (0.610 to 12.07)	**TL18086-188-[*]**
			0.250 (6.350)	.086 to 0.537 (2.184 to 13.640)	**TL18086-250-[*]**
350 (159)	0.20 (0.09) Max.	As Shown	0.145 (3.683)	0 to .087 (2.210)	**TL18089-111**
				0 to .275 (6.985)	**TL18089-109**
		None	0.145 (3.683)	0 to .087 (2.210)	**TL18089-112**
				0 to .275 (6.985)	**TL18089-110**

* Latches are not adjustable. Contact Camloc/Ram Engineering for available standard Bolt Offset dimensions and P/N dash numbers

Get quote
Angic Global Solutions 1-888-872-0690
https://www.AngicGlobal.com Sales@AngicGlobal.com

Series	Dimensions	Material/ Finish
310643 **Flush, Heavy Duty** 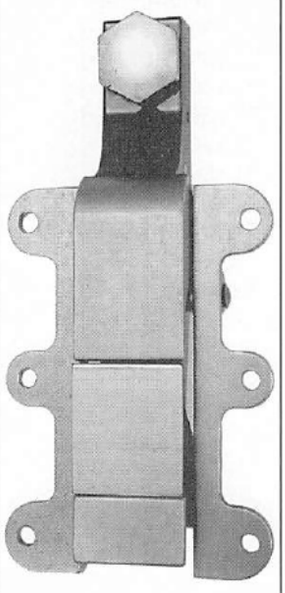	Non-Adjustable 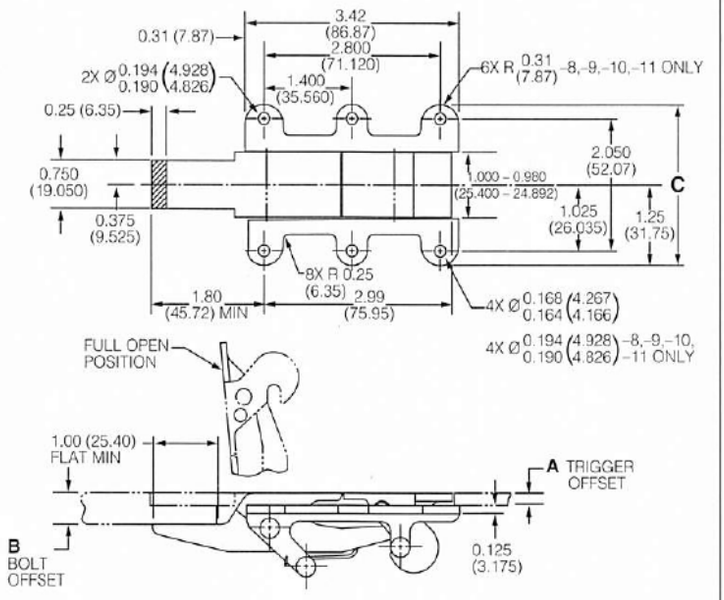	Trigger, Bolt and Housing: 7075-T651 Aluminum Alloy/ Anodixe Pin and Rivets: CRES/Passivate Springs: CRES/Passivate
	Adjustable 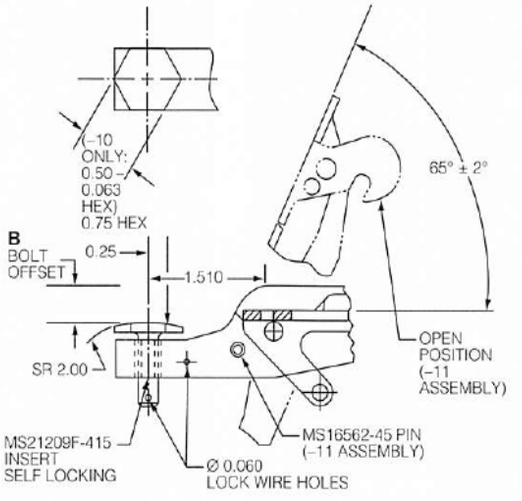	Trigger and Housing: 7075-T651 Aluminum Alloy/ Anodixe Pin and Rivets: CRES/Passivate Springs: CRES/Passivate HEX Bolt: 7075-T651 Aluminum Alloy/ Anodize (-11 only) Karon B Coating On Bolt Surface (-10 Only)

Dimensions specified in inches (millimeters) and pounds (kilograms).
Note: Variables may not represent the same dimensions on all series numbers.

Get quote
Angic Global Solutions 1-888-872-0690
https://www.AngicGlobal.com Sales@AngicGlobal.com

Ultimate Load, lbs.	Weight lbs.	Mounting Holes	A	B	C	D	Part Number
1200 (544)	0.30 (0.14)	As Shown	0.125 (3.175) 0.170 (4.318) 0.170 (4.318) 0.250 (6.350) 0.300 (76.200)	0.55 (13.87) 0.45 (11.43) 0.45 (11.43) 0.55 (13.87)	2.50 (63.50) Max.	–	**310643-1** **310643-3** **310643-6** **310643-7** **310643-2**
1200 (544)	0.33 (0.15)	As Shown	0.250 (6.350)	0.45 to 0.65 (11.43 to 16.51)	2.52 (64.01) Max.	–	**310643-8**
950 (431)	0.33 (0.15)	As Shown	0.125 (3.175) 0.300 (7.620)	0.35 to 0.45 (8.89 to 11.43)	2.50 (63.50) Max. 2.52 (64.01) Max.	–	**310643-4** **310643-5** **310643-11**
1200 (544)	0.33 (0.15)	As Shown	0.250 (6.350)	0.45 to 0.65 (11.43 to 16.51)	2.52 (64.01) Max.	–	**310643-9** **310643-10**

Get quote
Angic Global Solutions 1-888-872-0690
https://www.AngicGlobal.com Sales@AngicGlobal.com

Series	Dimensions	Material/ Finish
TL18045 **Light Duty** 	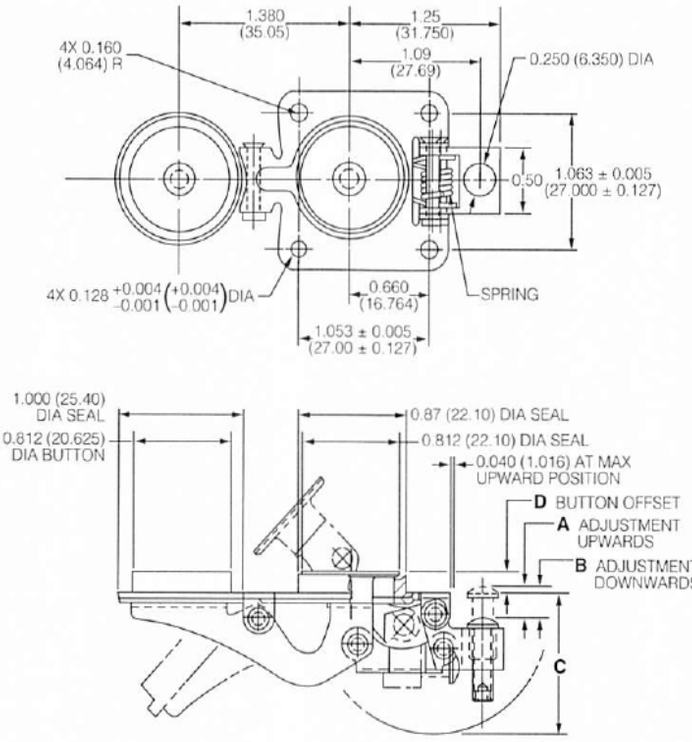	Bolt, Bracket, Trigger, Link and Springs: 17-7PH CRES/Passivate
TL18068 **Adjustable Bolt** 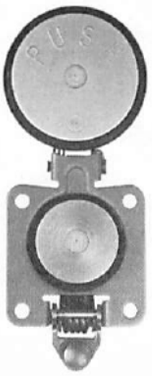	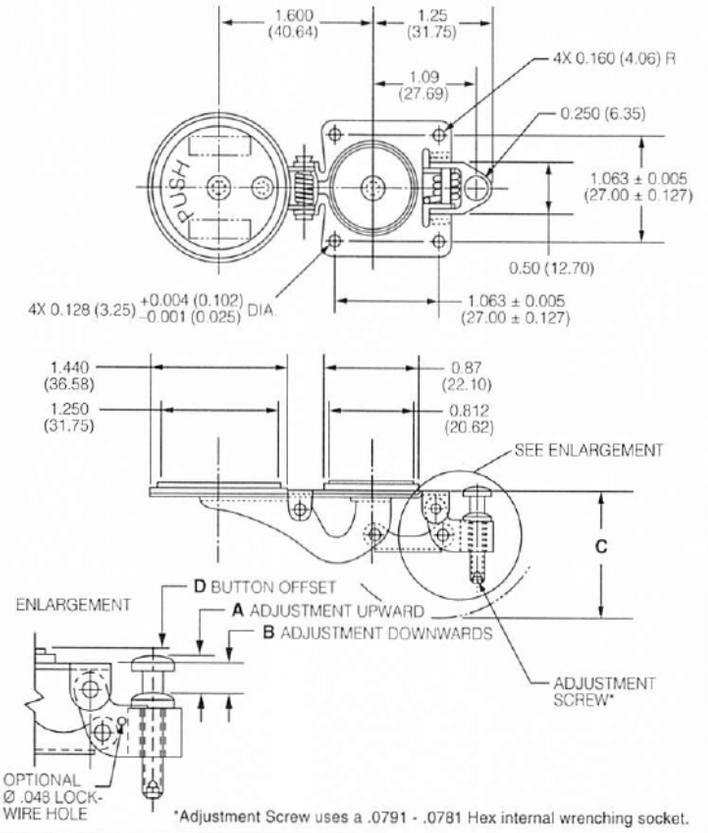	Bolt, Bracket, Trigger, Link and Springs: 17-7PH CRES/Passivate

Dimensions specified in inches (millimeters) and pounds (kilograms).
Note: Variables may not represent the same dimensions on all series numbers.

Get quote
Angic Global Solutions 1-888-872-0690
https://www.AngicGlobal.com Sales@AngicGlobal.com

Ultimate Load, lbs.	Weight lbs.	Mounting Holes	A	B	C	D	Part Number
160 (73)	0.10 (.045) Max.	As Shown	0.24 (6.10)	0.20 (5.08)	1.10 (27.94)	0.032 (0.813)	TL18045-101-032
						0.040 (1.016)	TL18045-101-040
						0.050 (1.270)	TL18045-101-050
						0.063 (1.600)	TL18045-101-063
						0.071 (1.803)	TL18045-101-071
						0.080 (2.032)	TL18045-101-080
						0.090 (2.286)	TL18045-101-090
						0.100 (2.540)	TL18045-101-100
						0.125 (3.175)	TL18045-101-125
						0.160 (4.064)	TL18045-101-160
						0.180 (4.572)	TL18045-101-180
						0.190 (4.826)	TL18045-101-190
						0.250 (6.350)	TL18045-101-250
	0.10 (.045) Max.	As Shown	0.24 (6.10)	0.44 (11.18)	1.30 (33.02)	0.032 (0.813)	TL18045-103-032
						0.040 (1.016)	TL18045-103-040
						0.050 (1.270)	TL18045-103-050
						0.063 (1.600)	TL18045-103-063
						0.071 (1.803)	TL18045-103-071
						0.080 (2.032)	TL18045-103-080
						0.090 (2.286)	TL18045-103-090
						0.100 (2.540)	TL18045-103-100
						0.125 (3.175)	TL18045-103-125
						0.160 (4.064)	TL18045-103-160
						0.180 (4.572)	TL18045-103-180
						0.190 (4.826)	TL18045-103-190
						0.250 (6.350)	TL18045-103-250
160 (73)	0.14 (.063) Max.	As Shown	0.24 (6.10)	0.20 (5.08)	1.10 (27.94)	0.032 (0.813)	TL18068-101-032[*]
						0.040 (1.016)	TL18068-101-040[*]
						0.050 (1.270)	TL18068-101-050[*]
						0.063 (1.600)	TL18068-101-063[*]
						0.071 (1.803)	TL18068-101-071[*]
						0.080 (2.032)	TL18068-101-080[*]
						0.090 (2.286)	TL18068-101-090[*]
						0.100 (2.540)	TL18068-101-100[*]
						0.125 (3.175)	TL18068-101-125[*]
						0.160 (4.064)	TL18068-101-160[*]
						0.180 (4.572)	TL18068-101-180[*]
						0.190 (4.826)	TL18068-101-190[*]
						0.250 (6.350)	TL18068-101-250[*]
	0.14 (.063) Max.	As Shown	0.24 (6.10)	0.44 (11.18)	1.30 (33.02)	0.032 (0.813)	TL18068-101-032[*]
						0.040 (1.016)	TL18068-101-040[*]
						0.050 (1.270)	TL18068-101-050[*]
						0.063 (1.600)	TL18068-101-063[*]
						0.071 (1.803)	TL18068-101-071[*]
						0.080 (2.032)	TL18068-101-080[*]
						0.090 (2.286)	TL18068-101-090[*]
						0.100 (2.540)	TL18068-101-100[*]
						0.125 (3.175)	TL18068-101-125[*]
						0.160 (4.064)	TL18068-101-160[*]
						0.180 (4.572)	TL18068-101-180[*]
						0.190 (4.826)	TL18068-101-190[*]
						0.250 (6.350)	TL18068-101-250[*]

*Add suffix "A" for optional .048 Dia. safety wire hole.

Get quote
Angic Global Solutions 1-888-872-0690
https://www.AngicGlobal.com Sales@AngicGlobal.com

Series	Dimensions	Material/ Finish
TL18069 Adjustable	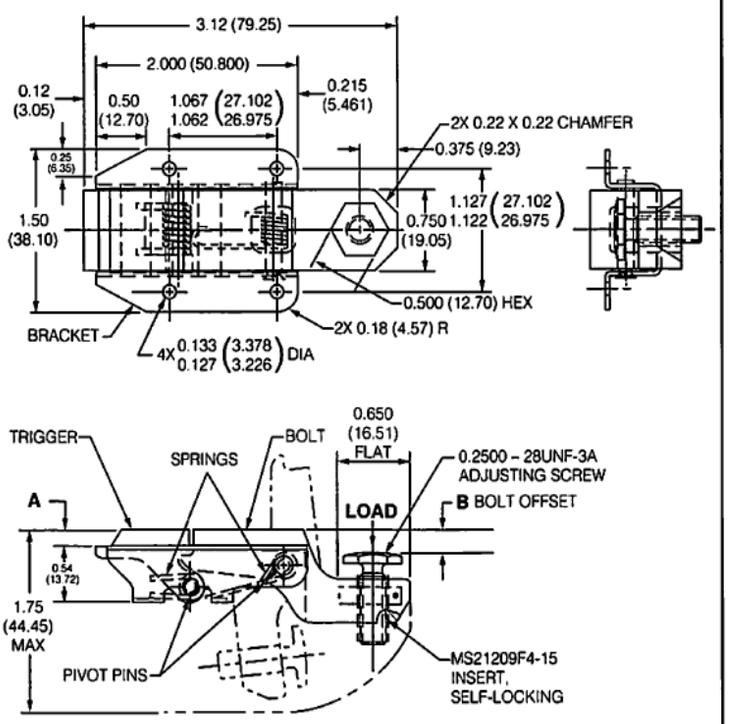	**Bracket:** 17-7PH CRES/Passivate **Bolt and Trigger:** 2024-T3511 Aluminum Alloy/ Anodize **Springs:** 17-7PH CRES/Passivate

Dimensions specified in inches (millimeters) and pounds (kilograms).
Note: Variables may not represent the same dimensions on all series numbers.

Get quote
Angic Global Solutions 1-888-872-0690
https://www.AngicGlobal.com Sales@AngicGlobal.com

Ultimate Load, lbs.	Weight lbs.	Mounting Holes	A	B	C	D	Part Number
900 (408)	0.30 (.136) Max.	As Shown	.032 (0.813) .040 (1.016) .050 (1.270) .063 (1.600) .071 (1.803) .080 (2.032) .100 (2.540) .125 (3.175) .160 (3.607)	0 to .250 (0 to 6.350)	–	–	**TL18069A032** **TL18069A040** **TL18069A050** **TL18069A063** **TL18069A071** **TL18069A080** **TL18069A100** **TL18069A125** **TL18069A160**
			.032 (0.813) .040 (1.016) .050 (1.270) .063 (1.600) .071 (1.803) .080 (2.032) .100 (2.540) .125 (3.175) .160 (3.607)	.250 to 0.500 (6.350 to 12.700)	–	–	**TL18069B032** **TL18069B040** **TL18069B050** **TL18069B063** **TL18069B071** **TL18069B080** **TL18069B100** **TL18069B125** **TL18069B160**

Get quote
Angic Global Solutions 1-888-872-0690
https://www.AngicGlobal.com Sales@AngicGlobal.com

Series	Dimensions
TL10349 **20" Radius** 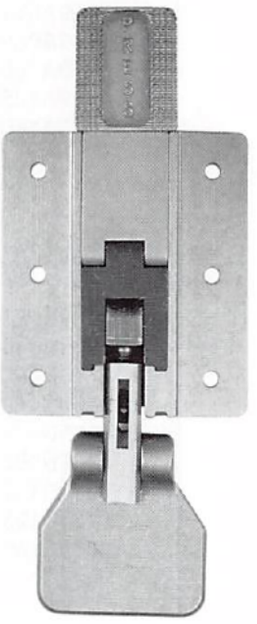	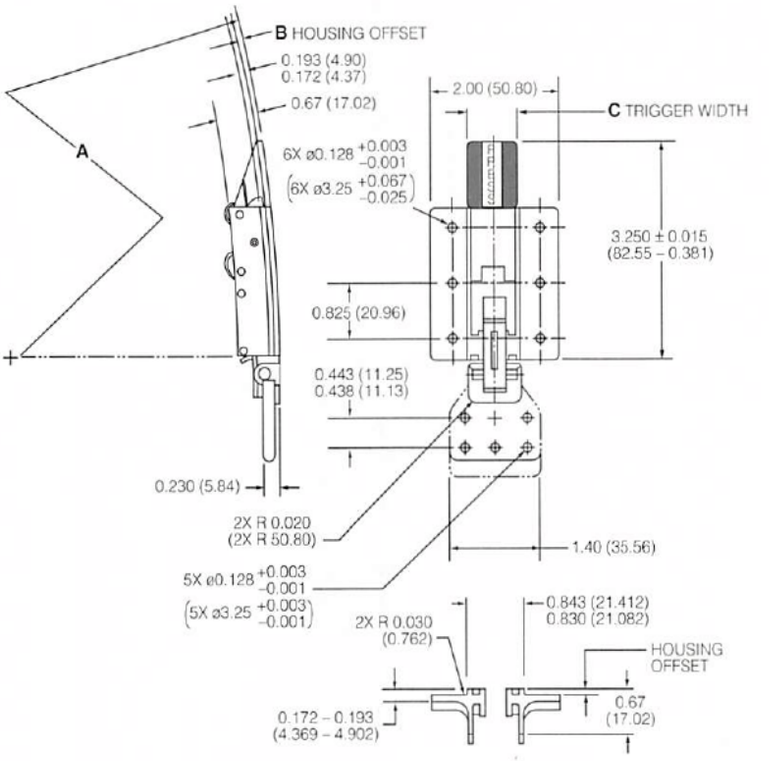
TL10368 **12" Radius** 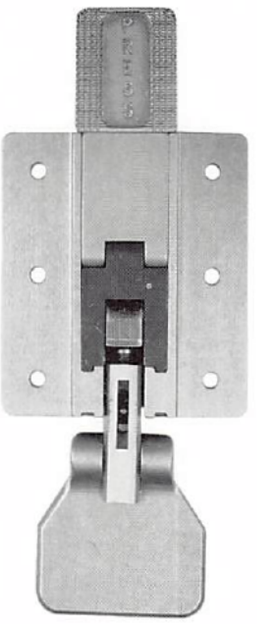	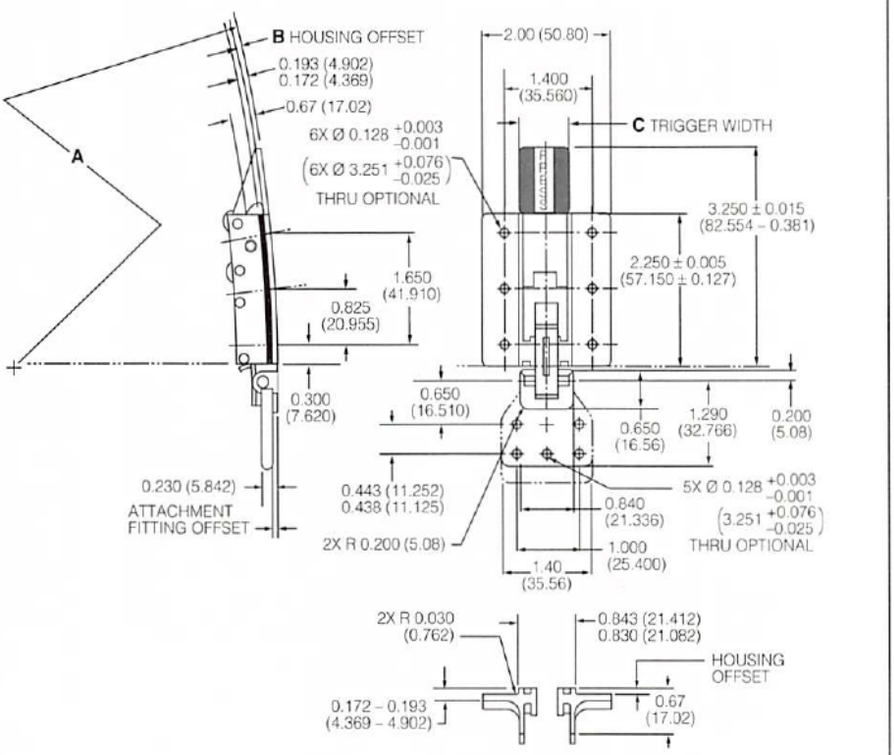

Dimensions specified in inches (millimeters), pounds (kilograms).
Note: Variables may not represent the same dimensions on all series numbers.

Get quote
Angic Global Solutions 1-888-872-0690
https://www.AngicGlobal.com Sales@AngicGlobal.com

Material/ Finish	Ultimate Load, lbs.	Weight, lbs.	A	B	C	Basic Part Number
Trigger: 380 Aluminum Alloy/Anodize or 2024-TL Aluminum Alloy/ Anodize Cam Block: 2024-T3511 Aluminum Alloy/ Anodize Side Plate: 2024-T351 Aluminum Alloy/ Anodize Attachment Fitting: 2014-T6 Aluminum Alloy/ Anodize	2,000 (907)	.25 (.113) Max.	R20.00	0.050 - 0.130 (1.270 - 3.30) (in thousandths of an inch)	.815 (34.925) 1.375 (20.701)	**TL10349-3[*]** **TL10349-1[*]** • Consult Camloc/Ram Engineering for complete range of options and Part Number designations.
Trigger: 380 Aluminum Alloy/Anodize or 2024-TL Aluminum Alloy/ Anodize Cam Block: 2024-T3511 Aluminum Alloy/ Anodize Side Plate: 2024-T351 Aluminum Alloy/ Anodize Attachment Fitting: 2024-T6 Aluminum Alloy/ Anodize	2,000 (907)	.25 (.113) Max.	R12.00 (304.80)	0.050 - 0.130 (1.270 - 3.30) (in thousandths of an inch)	.815 (34.925) 1.375 (20.701)	**TL10349-3[*]** **TL10349-1[*]** • Consult Camloc/Ram Engineering for complete range of options and Part Number designations.

Get quote
Angic Global Solutions 1-888-872-0690
https://www.AngicGlobal.com Sales@AngicGlobal.com

Series	Dimensions
TL10369 **6" Radius** 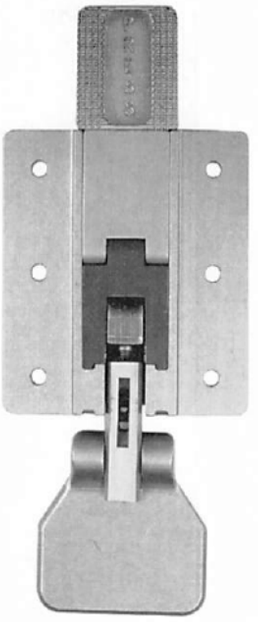	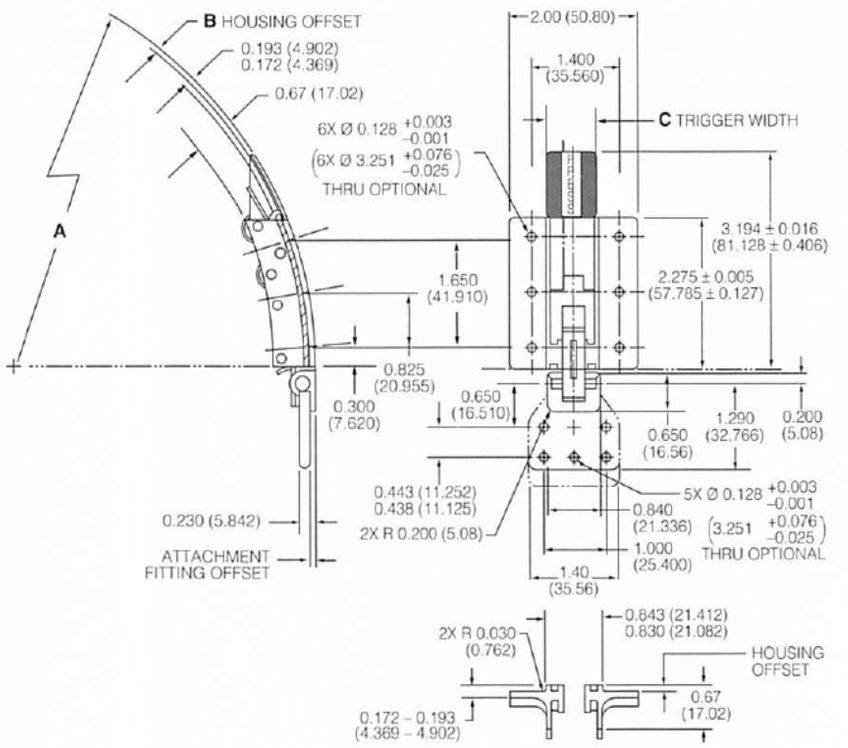
TL10370 **Flat** 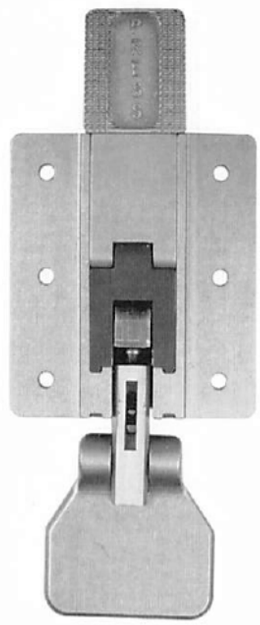	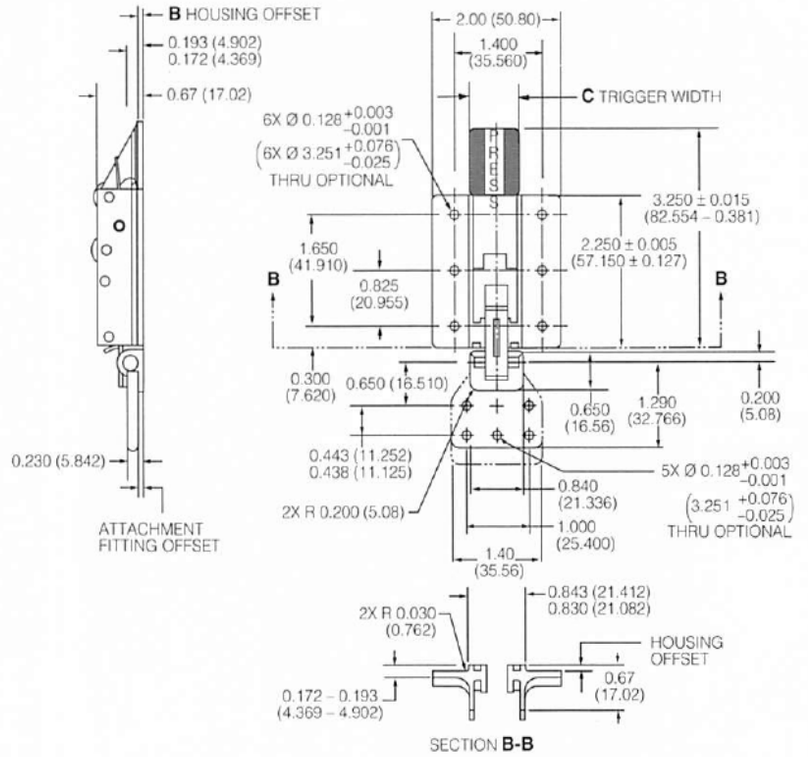

Dimensions specified in inches (millimeters), pounds (kilograms).
Note: Variables may not represent the same dimensions on all series numbers.

Get quote
Angic Global Solutions 1-888-872-0690
https://www.AngicGlobal.com Sales@AngicGlobal.com

Material/ Finish	Ultimate Load, lbs.	Weight, lbs.	A	B	C	Basic Part Number
Trigger: 380 Aluminum Alloy/ Anodize Cam Block: 2024-T3511 Aluminum Alloy/ Anodize Side Plate: 2024-T351 Aluminum Alloy/ Anodize Attachment Fitting: 2024-T6 Aluminum Alloy/ Anodize	2,000 (907)	.25 (.113) Max.	R 6.00 (152)	0.050 - 0.130 (1.270 - 3.30) 1.375 (20.701)	.815 (34.925)	**TL10369-3[*]** **TL10369-1[*]**
Trigger: 380 Aluminum Alloy/Anodize Cam Block: 2024-T3511 Aluminum Alloy/ Anodize Side Plate: 2024-T351 Aluminum Alloy/ Anodize Attachment Fitting: 2024-T6 Aluminum Alloy/ Anodize	2,000 (907)	.25 (.113) Max.		0.050 - 0.130 (1.270 - 3.30)	.815 (34.925) 1.375 (20.701)	**TL10370-3[*]** **TL10370-1[*]**

* Consult Camloc/Ram Engineering for complete range of options and Part Number designations.

* Consult Camloc/Ram Engineering for complete range of options and Part Number designations.

Get quote
Angic Global Solutions 1-888-872-0690
https://www.AngicGlobal.com Sales@AngicGlobal.com

Series	Dimensions
TL25003 **Rotary Collet**	Latch

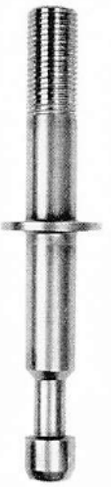

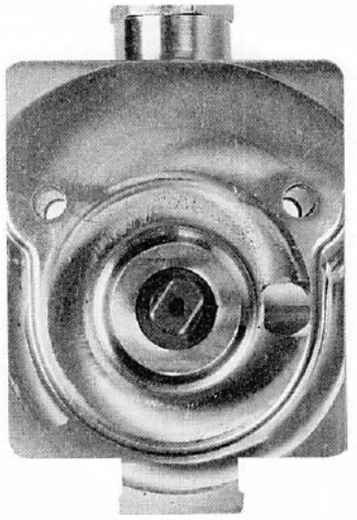

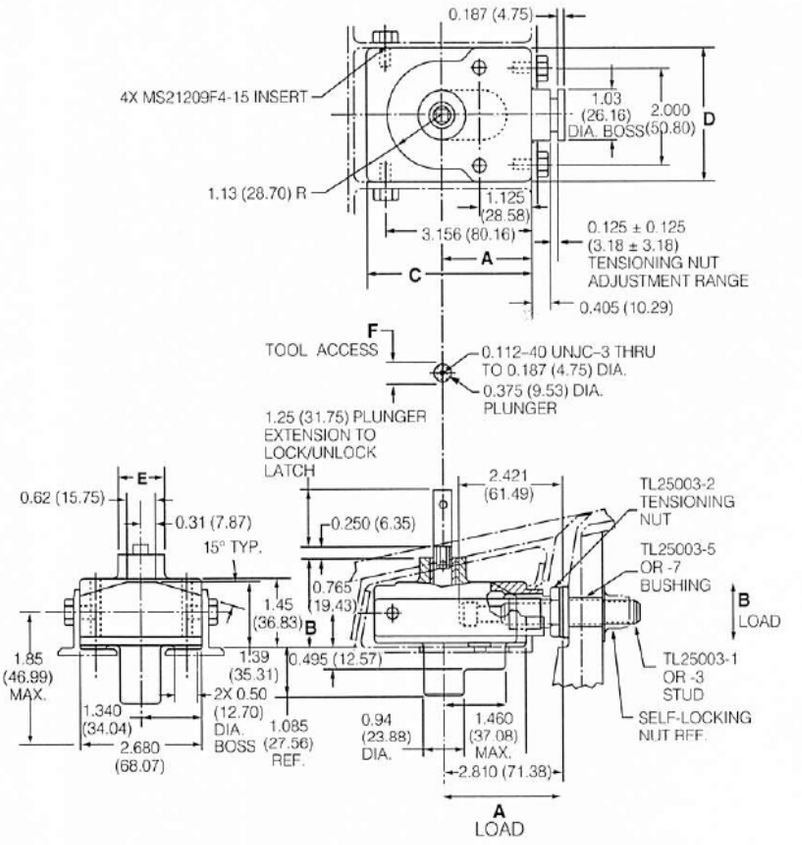

Stud

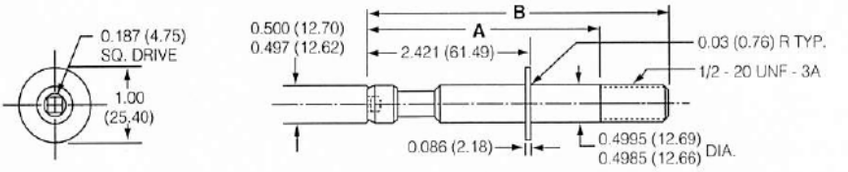

Bushing

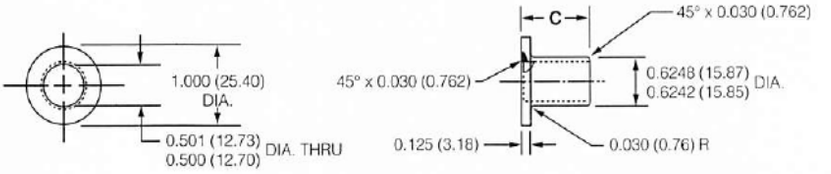

* Actuated with .25" (6.35 mm) open end wrench.

Dimensions specified in inches (millimeters) and pounds (kilograms).
Note: Variables may not represent the same dimensions on all series numbers.

Get quote
Angic Global Solutions 1-888-872-0690
https://www.AngicGlobal.com Sales@AngicGlobal.com

Material/ Finish	Ultimate Load, lbs.	A Dim.	B Dim.	C	D	E	F	G	Weight, lbs.	Part Number
Cover and Housing: 17-4PH CRES/ Passivate Spring: 17-7 CRES/ Passivate Tensioning Nut: 17-4PH CRES/ Dry Film Lube	A - 12,000 (5443) B - 10,000 (4535)	1.97 (50.04)	1.953 (49.606)	3.59 (91.87)	2.750 (69.850)	1.000 (25.400) Dia.	0.25 (6.35) Square	–	3.00 (1.36)	**TL25003-101**
Stud: Inconel 718/ Shot Peened		3.430 (87.122) 3.055 (77.597)	4.430 (112.522) 3.930 (99.822)	–	–	–		–	.24 (.10)	**TL25003-1** **TL25003-3**
Bushing: 303 CRES		–	–	1.000 (25.40) .625 (15.875)	–	–	–	–	.08 (.03)	**TL25003-5** **TL25003-7**

Get quote
Angic Global Solutions 1-888-872-0690
https://www.AngicGlobal.com Sales@AngicGlobal.com

Series	Dimensions
410672 **Rotary Lock**  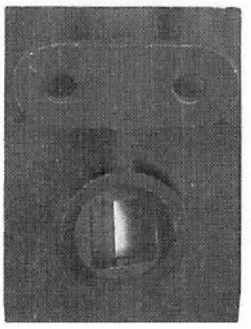	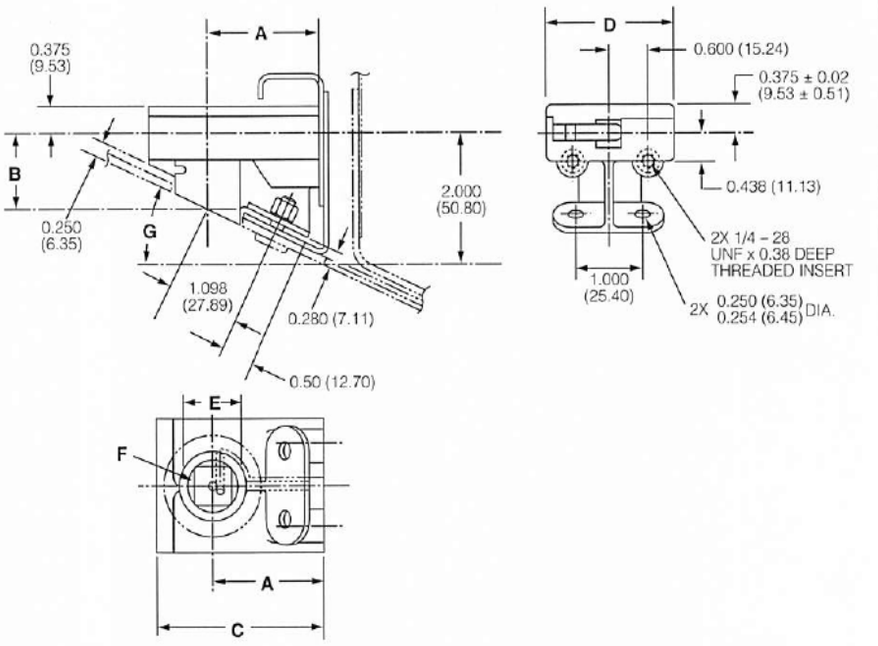 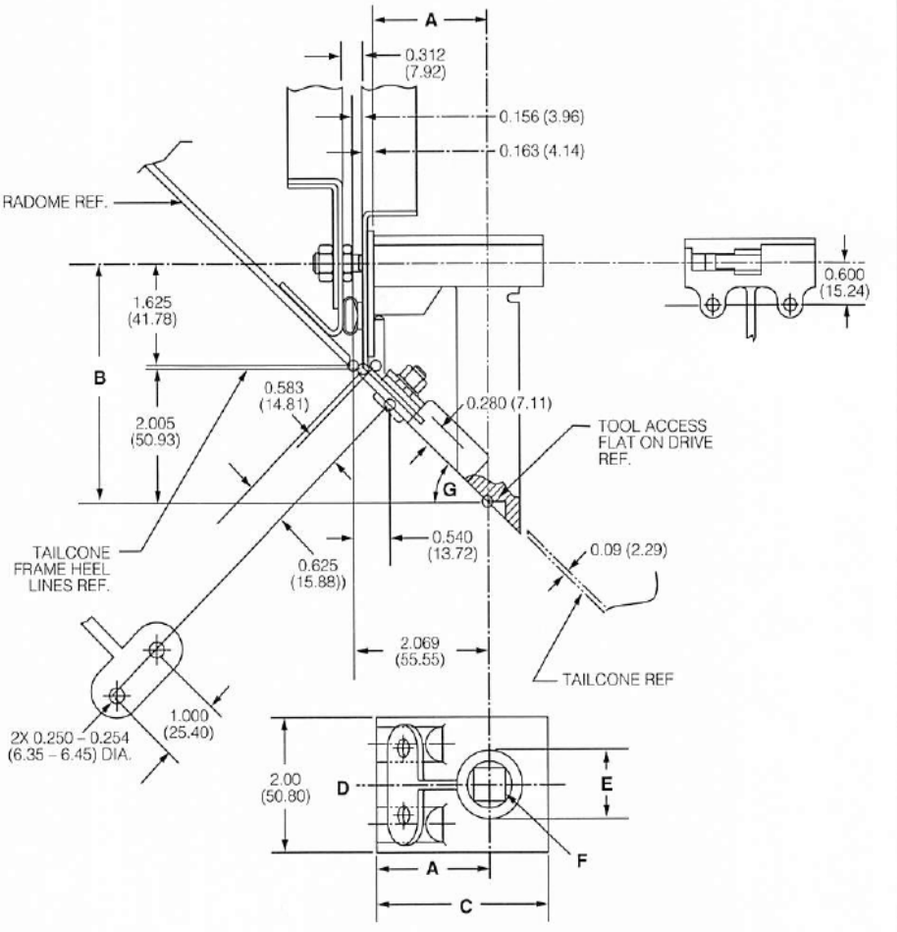

Dimensions specified in inches (millimeters) and pounds (kilograms).
Note: Variables may not represent the same dimensions on all series numbers.

Get quote
Angic Global Solutions 1-888-872-0690
https://www.AngicGlobal.com Sales@AngicGlobal.com

Material/ Finish	Ultimate Load, lbs.	A Dim.	B Dim.	C	D	E	F	G	Weight, lbs.	Part Number
Cover, Housing and Plug: Aluminum Alloy/ Anodize Drive, Hook, Eyebolt and Pins: 17-4PH Stainless/ Passivate	1600 (726)	1.75 (44.45)	.990 (25.146) 1.151 (29.235)	2.64 (67.06)	2.00 (50.80)	1.00 (25.40) Dia.	1/2" (12.78) Square 3/8" (9.23) Square 1/2" (12.70) Square	28°5' 24.27°	0.35 (0.16)	**410672-102** **410672-3** **410672-104**
Cover, Housing and Plug: Aluminum Alloy/ Anodize Drive, Hook, Eyebolt and Pins: 17-4PH Stainless/ Passivate	1600 (726)	1.75 (44.45)	3.630 (92.20)	2.64 (67.06)	2.00 (50.80)	1.00 (25.40) Dia.	1/2" (12.70) Square	44° 05'	.50 (.22)	**410672-103**

I

Series	Dimensions
TL12079 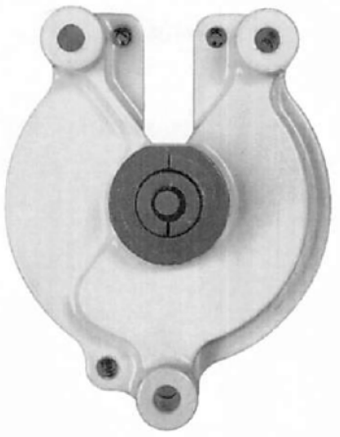	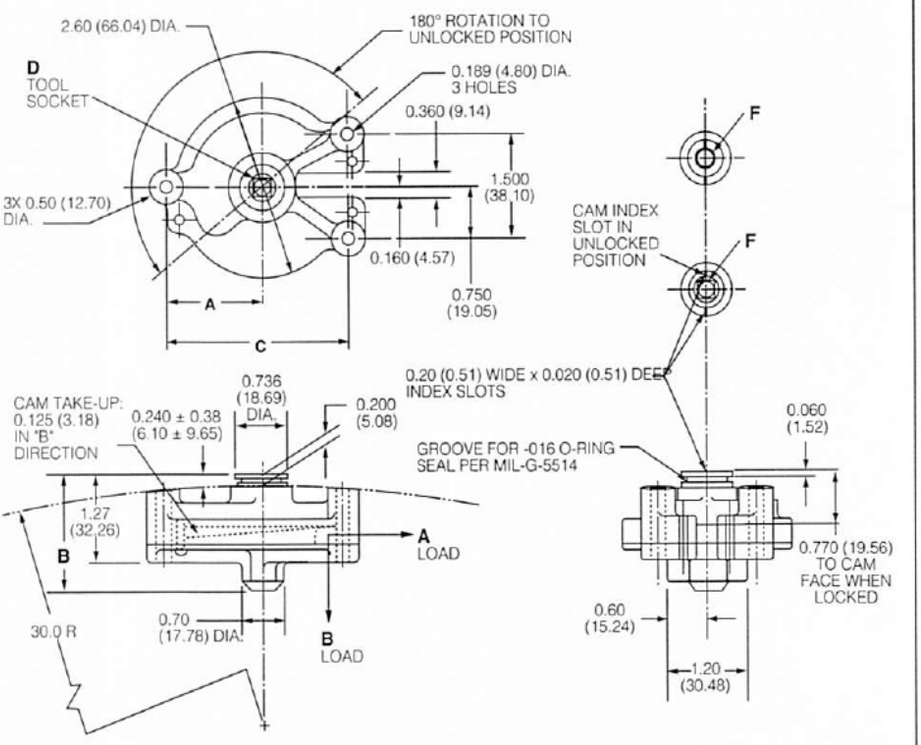 Note: Recommended use with striker assembly TL12080-101.
TL14004 Shear Pin, Rotary, Sealed 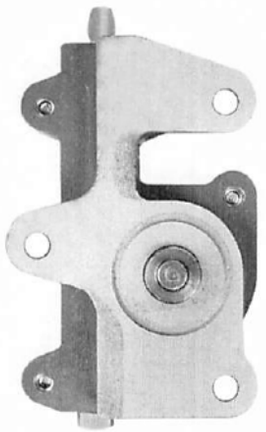 Optional Hole Mount Shown.	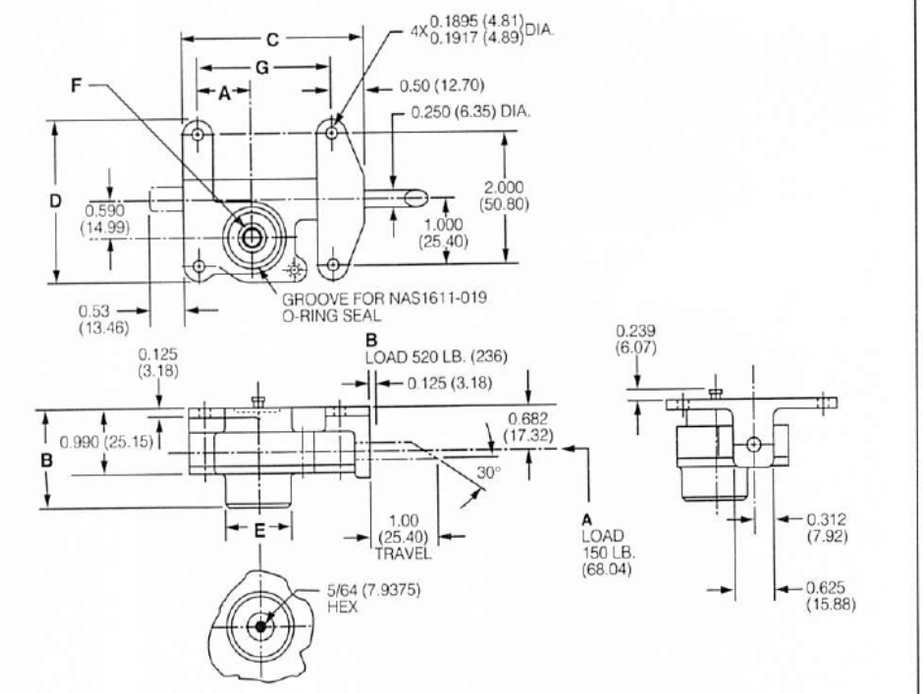

Dimensions specified in inches (millimeters) and pounds (kilograms).
Note: Variables may not represent the same dimensions on all series numbers.

Get quote
Angic Global Solutions 1-888-872-0690
https://www.AngicGlobal.com Sales@AngicGlobal.com

Material/ Finish	Ultimate Load, lbs.	A Dim.	B Dim.	C	D	E	F	G	Weight, lbs.	Part Number
Cover and Housing: A356-T6 Aluminum Alloy/ Anodize Dry Film Lube Cam: 17-4PH CRES/ Passivate Dry Film Lube Center Shaft: A360 Aluminum Alloy/Anodize	A - 1800 (817) B - 600 (272)	1.466 (37.24)	1.71±.06 (43.43)	2.716 (68.986)	.25 (6.35) Square .219 (5.56)	.736 (8.69) Dia.	.25 6.35) Square .219 (5.56)	–	.41 (0.19)	**TL12079-101** **TL12079-103**
Cover and Housing: A.356-T6 Aluminum Alloy/ Anodize Spring: FS302 CRES/ Passivate Drive: 15-5PH CRES/ Passivate	A - 520 (236) B - 150 (68)	1.50 (38.10) 0.865 (21.971)	1.495 (37.973)	3.62 (91.95) 2.93 (74.42)	2.74 (69.60)	1.08 (27.43)	0.219	2.875 (73.025)	0.35 (0.16)	**TL14004-101** **TL14004-102**

Get quote
Angic Global Solutions 1-888-872-0690
https://www.AngicGlobal.com Sales@AngicGlobal.com

Series	Dimensions
TL12080 **Avionics Access Door** 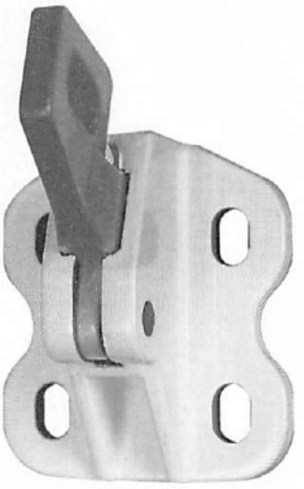	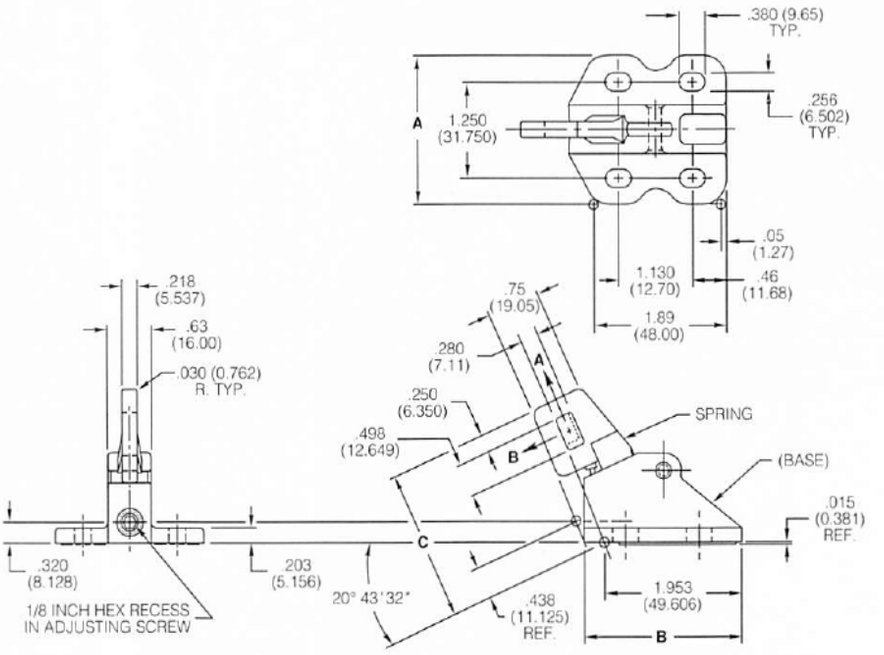 Adjusts with a standard 1/8" allen wrench. Note: Recommended for use with rotary latch TL12079 Series.
TL12158 **Access Door** 	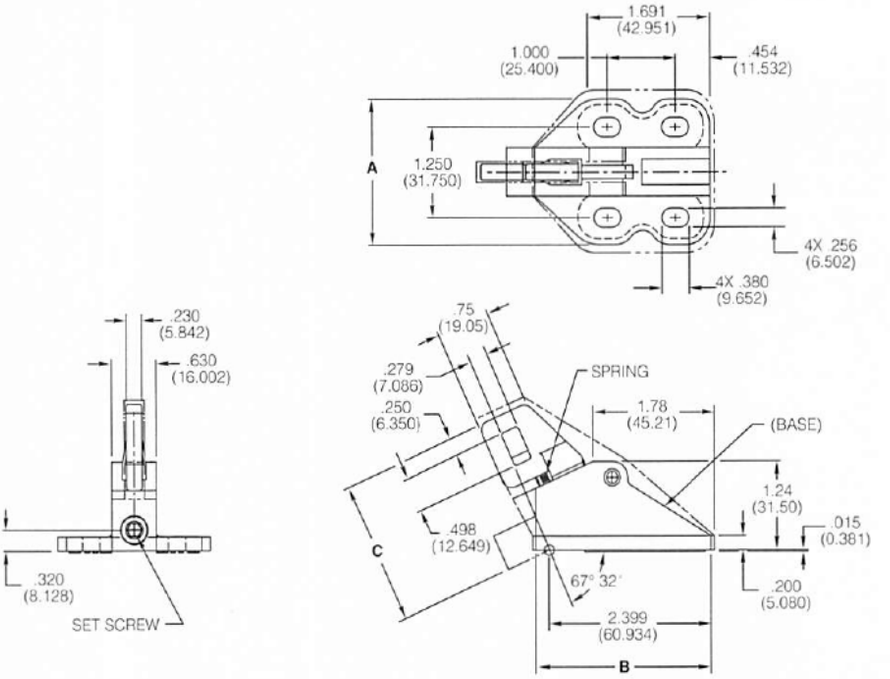 Adjusts with a standard 1/8" allen wrench. Note: Recommended for use with latch assembly TL12157-101. (Similar to the TL12709 Series).

Dimensions specified in inches (millimeters) and pounds (kilograms).
Note: Variables may not represent the same dimensions on all series numbers.

Get quote
Angic Global Solutions 1-888-872-0690
https://www.AngicGlobal.com Sales@AngicGlobal.com

Material/ Finish	Ultimate Load, lbs. A	Ultimate Load, lbs. B	A	B	C	Weight, lbs.	Tool Socket	Part Number
Striker: 17-4PH Stainless Steel/ Passivate/ Dry Film Lube Base: A356-T6 Aluminum Alloy/Anodize Spring: FS302 Stainless Steel/Passivate	1800 (817)	600 (272)	2.00 (50.80)	2.220 (56.388)	1.780 (45.212) Nom.	.25 (.113)	0.125" Hex (3.175)	**TL12080-101**
Striker: 17-4PH CRES Passivate/ Dry Film Lube Base: A356-T6 Aluminum Alloy/Anodize Springs: 302 CRES/ Passivate	2040 (925)	930 (422)	2.00 (50.80)	2.600 (66.040)	2.036 (51.714) Nom.	.25 (.113)	0.125" Hex (3.175)	**TL12158-101**

Get quote
Angic Global Solutions 1-888-872-0690
https://www.AngicGlobal.com Sales@AngicGlobal.com

Series	Dimensions
TL16015 **2-pin** 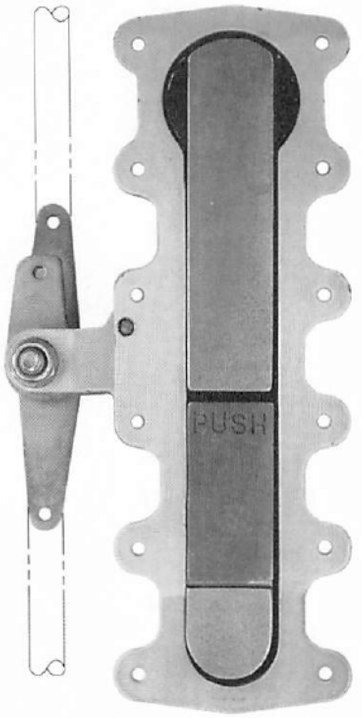	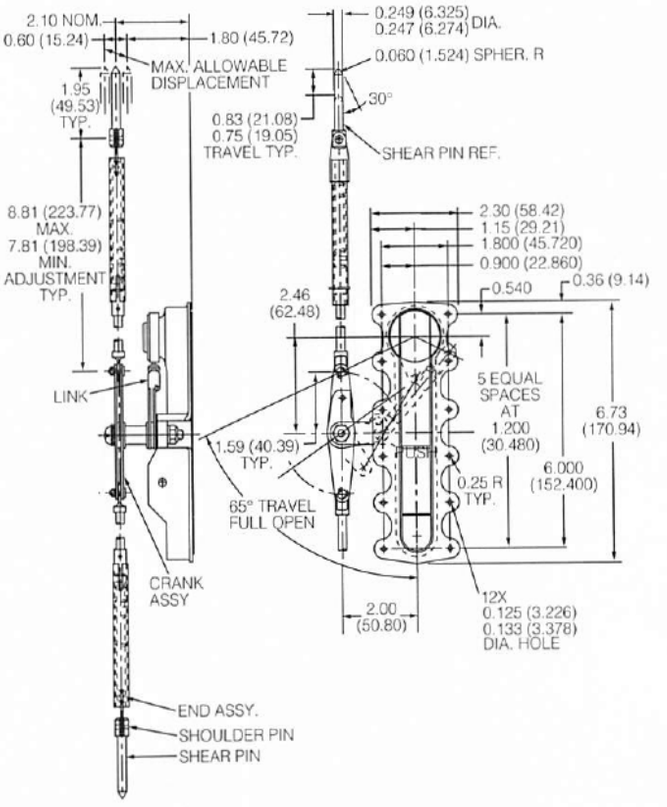
TL16082 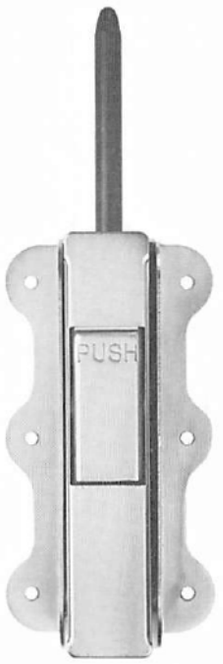	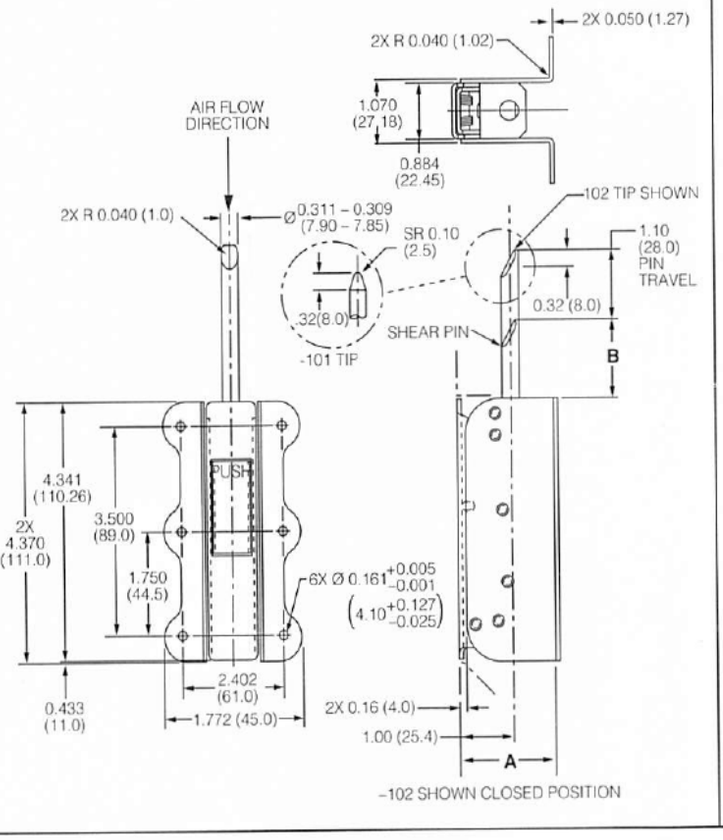

Dimensions specified in inches (millimeters), pounds (kilograms).
Note: Variables may not represent the same dimensions on all series numbers.

Get quote
Angic Global Solutions 1-888-872-0690
https://www.AngicGlobal.com Sales@AngicGlobal.com

Shear Pin Latch Assembly

Material/ Finish	Ultimate Load, lbs.	Weight, lbs.	A inches	B inches	Part Number
Shear Pin: 17-4PH CRES/Passivate Dry Film Lube Housing, Handle and Trigger: A356 -T61 Aluminum Alloy/Anodize Springs: Music Wire	1,000 (454) Double Shear	1.75 (.793) Max.	–	–	**TL16015-101**
Shear Pin: 17-4PH CRES/Passivate	585 (265) Single Shear	.50 (.226) Max.	1.71 (43.43)	1.34 (34.04)	**TL16082-102**
Link, Handle, Side Plate, Trigger, and Pivot: 302- 304 CRES/Passivate Springs: 17-7PH CRES/Passivate	1,170 (531) Double Shear		1.50 (38.10)	1.49 (37.85)	**TL16082-101**

Get quote
Angic Global Solutions 1-888-872-0690
https://www.AngicGlobal.com Sales@AngicGlobal.com

Series	Dimensions
TL16119 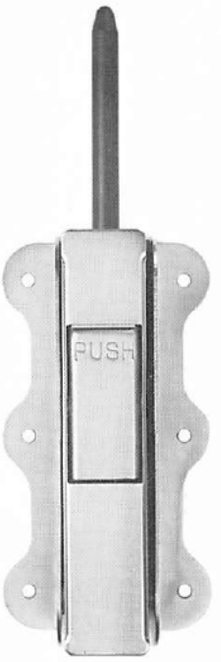	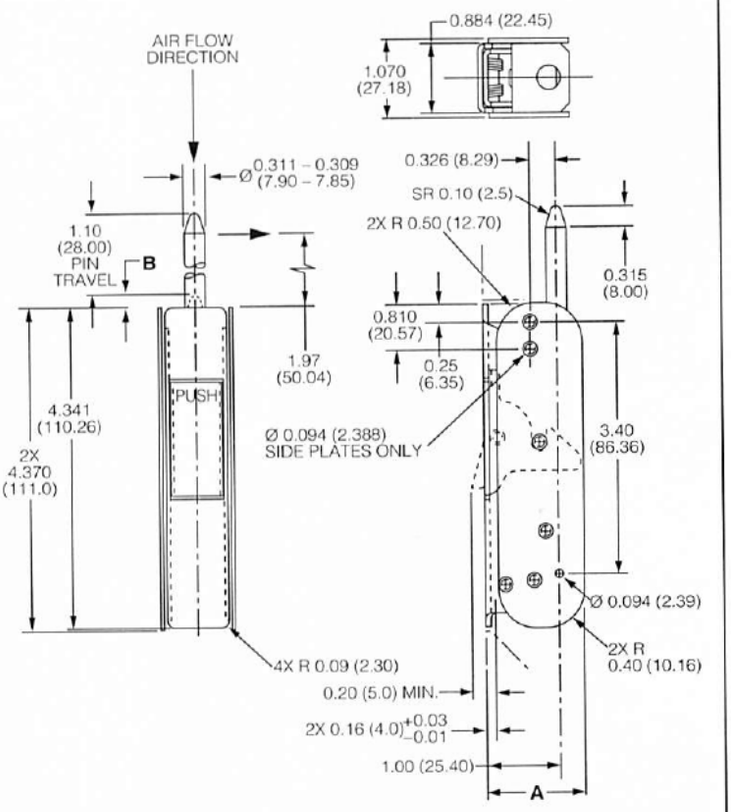
TL20050 	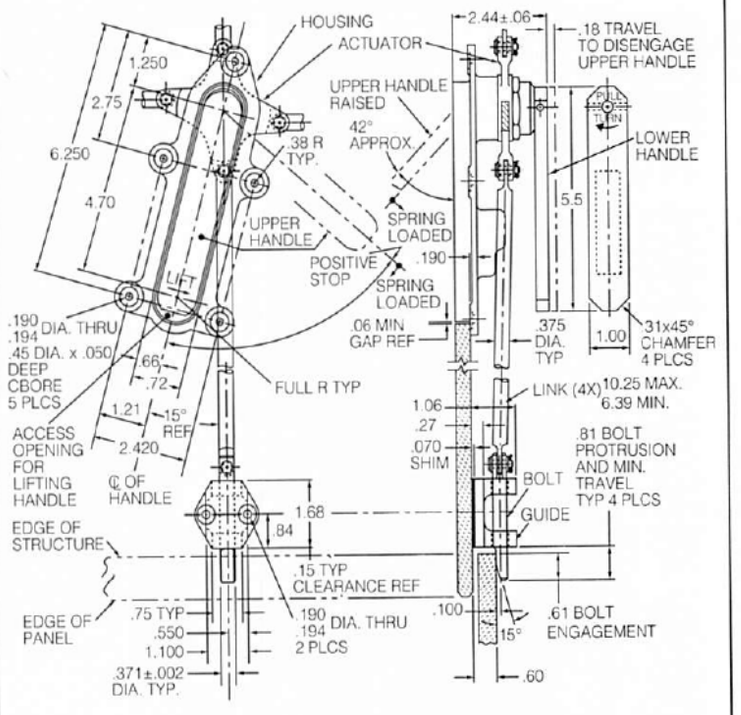

Dimensions specified in inches (millimeters), pounds (kilograms).
Note: Variables may not represent the same dimensions on all series numbers.

Get quote
Angic Global Solutions 1-888-872-0690
https://www.AngicGlobal.com Sales@AngicGlobal.com

Shear Pin Latch Assembly

Material/ Finish	Ultimate Load, lbs.	Weight, lbs.	A inches	B inches	Part Number
Shear Pin: 17-4PH CRES/Passivate Link, Handle, Side Plate, Trigger and Pivot: 302 -304 CRES/Passivate Guide Block: 2024 -T351 Aluminum Alloy/ Anodize Springs: 17-7PH CRES/Passivate	10,000 (4,536) Double Shear	.50 (.226) Max.	1.34 (34.04)	1.77 (44.96) 1.26 (32.04)	**TL16119-102** **TL16119-103**
Links: 7075 -T651 Aluminum Alloy/ Anodize Housing, Actuator, and Bolt Guides: 356 -T6 Aluminum Alloy/Anodize Latch Bolts and Actuator Shafts: 17-4PH CRES/Passivate Springs: 17-7PH Spring Temper CRES/Passivate	–	2.50 (1.133) Max.	–	–	**TL20050-101***

* Basic Part Number. Consult Camloc/Ram Engineering for specific Part Number based on length of 4 links.

Get quote
Angic Global Solutions 1-888-872-0690
https://www.AngicGlobal.com Sales@AngicGlobal.com

Series	Dimensions

TL21008
Flush with Outer Handle

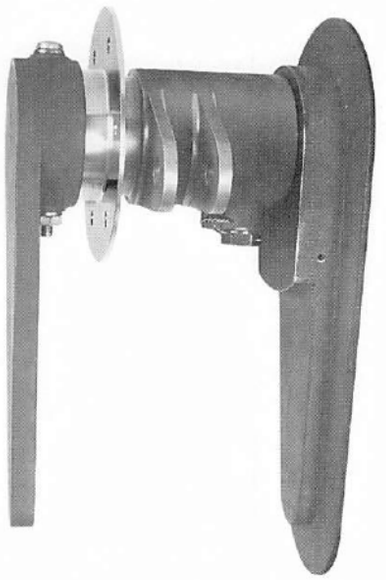

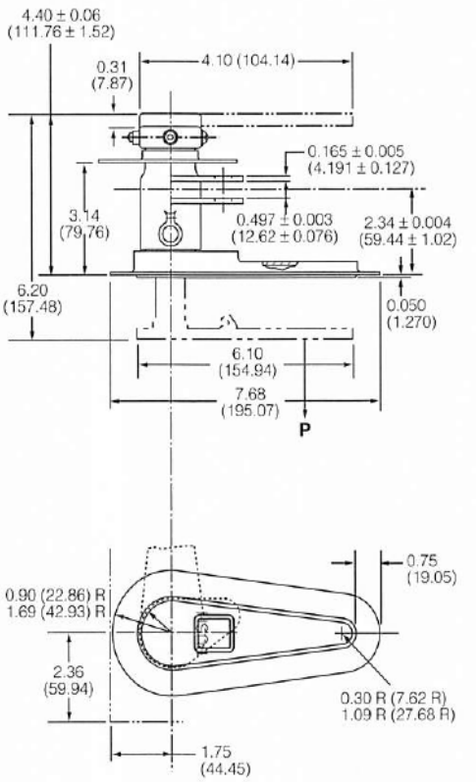

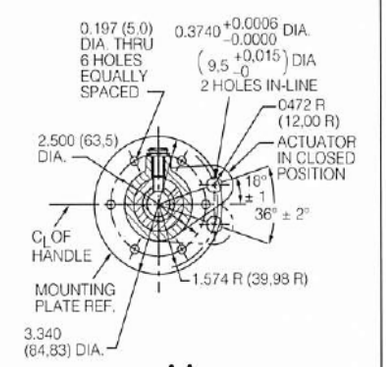

A-A

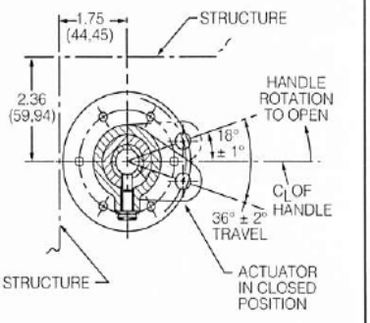

B-B

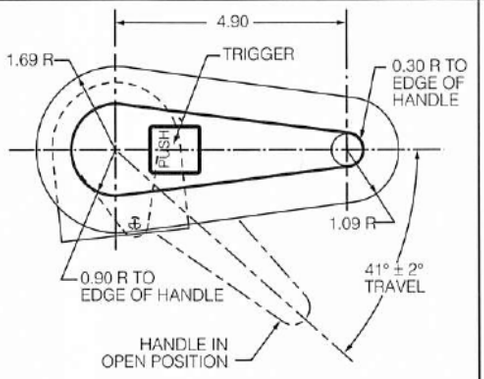

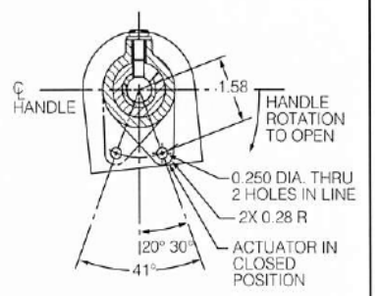

D-D

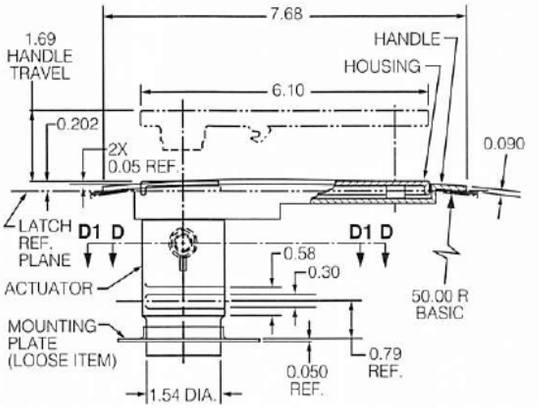

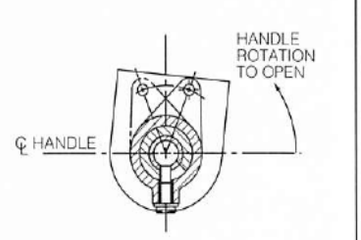

D¹-D¹

Dimensions specified in inches (millimeters) and pounds (kilograms).
Note: Variables may not represent the same dimensions on all series numbers.

Get quote
Angic Global Solutions 1-888-872-0690
https://www.AngicGlobal.com Sales@AngicGlobal.com

Material/ Finish	Ultimate Load, lbs.	Max. Torque in-lbs.	Max. Push or Pull Force, lbs.	Weight, lbs.	Feature Notes	Part Number
Housing and Actuator: Aluminum Alloy/ Anodize Handle and Trigger: 17-4PH CRES/ Passivate Mounting Plate: Aluminum Alloy/ Anodize	225 (102)	630	225 (102)	2.5 (1.333) Max.	Clockwise Handle Rotation	**TL21008-101**
Housing and Actuator: Aluminum Alloy/ Anodize Handle and Trigger: 17-4PH CRES/ Passivate Mounting Plate: Aluminum Alloy/ Anodize	225 (102)	630	225 (102)	2.5 (1.333) Max.	Counterclockwise Handle Rotation	**TL21008-102**
Housing and Actuator: Aluminum Alloy/ Anodize Handle and Trigger: 17-4PH CRES/ Passivate Mounting Plate: Aluminum Alloy/ Anodize	225 (102)	630	225 (102)	2.5 (1.333) Max.	Clockwise Handle Rotation	**TL21008-103**
Housing and Actuator: Aluminum Alloy/ Anodize Handle and Trigger: 17-4PH CRES/ Passivate Mounting Plate: Aluminum Alloy/ Anodize	225 (102)	630	225 (102)	2.5 (1.333) Max.	Counterclockwise Handle Rotation	**TL21008-104**

Get quote
Angic Global Solutions 1-888-872-0690
https://www.AngicGlobal.com Sales@AngicGlobal.com

Series	Dimensions
TL21007 **Flush with Inner & Outer Handle** 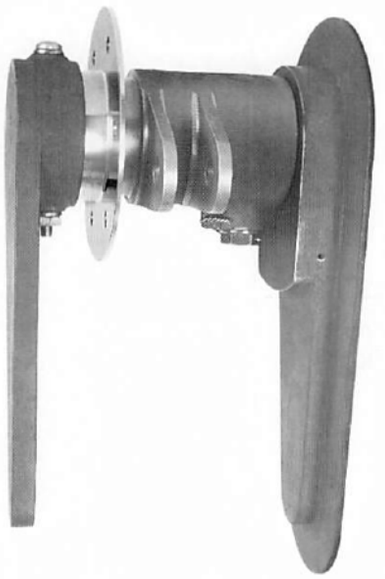	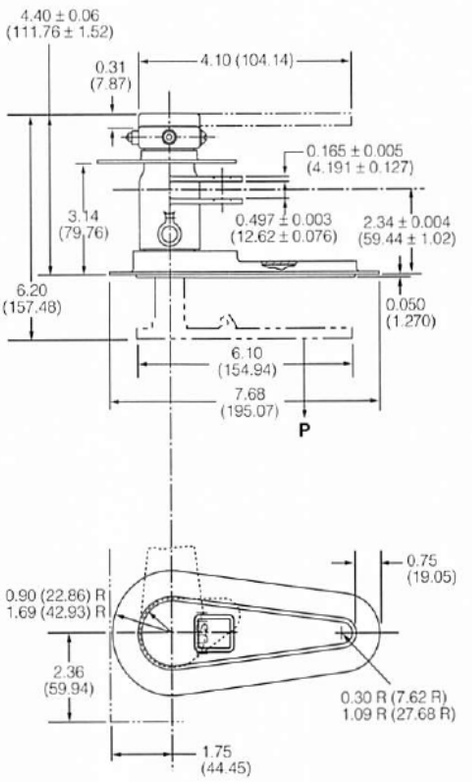 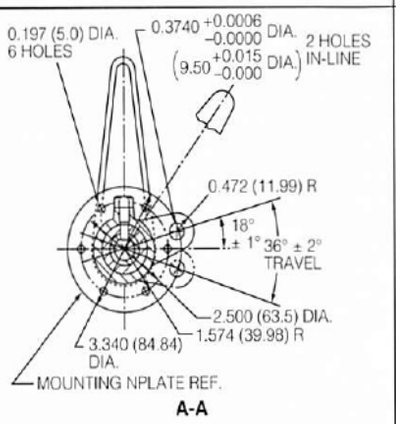 A-A 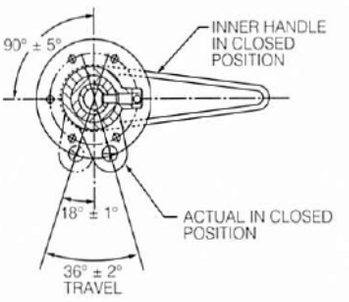 B-B
TL21030 **Inner and Outer Handles**	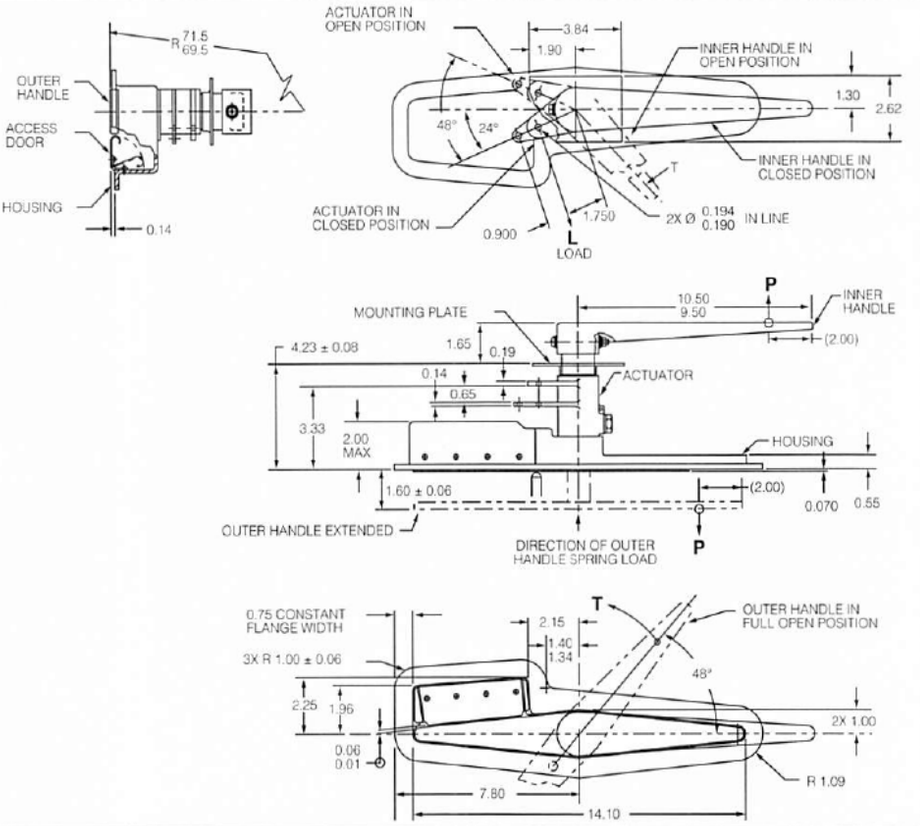

Dimensions specified in inches (millimeters) and pounds (kilograms).
Note: Variables may not represent the same dimensions on all series numbers.

Get quote
Angic Global Solutions 1-888-872-0690
https://www.AngicGlobal.com Sales@AngicGlobal.com

	Material/ Finish	Ultimate Load, lbs.	Max. Torque in-lbs.	Max. Push or Pull Force, lbs.	Weight, lbs.	Feature Notes	Part Number
	Inner Handle, Housing and Actuator: Aluminum Alloy/ Anodized Outer Handle and Trigger: 17-4PH/Passivate Mounting Plate: Aluminum Alloy/ Anodize	225 (102) @ P	630	225 (102)	2.5 (1.333) Max.	– With Free-Releasing Outer Handle*	**TL21007-101** **TL21007-103**
	Inner Handle, Housing and Actuator: Aluminum Alloy/ Anodized Outer Handle and Trigger: 17-4PH/Passivate Mounting Plate: Aluminum Alloy/ Anodize	225 (102) @ P	630	225 (102)	2.5 (1.333) Max.	– With Free-Releasing Outer Handle*	**TL21007-102** **TL21007-104**
	Inner Handle, Housing and Actuator: A356-T61 Aluminum Alloy/ Anodize Outer Handle: 17-4PH CRES/ Passivate Mounting Plate: 7075-T6 Aluminum Alloy/ Anodize	225 (102) @ P	1,800	P=225 @ Room Temperature T=1,913 @ Room Temperature	2.5 (1.333) Max.	10,000 Operation Cycle Life	**TL21030-101**

*Outer handle releases to free position regardless of inner handle position.

Get quote
Angic Global Solutions 1-888-872-0690
https://www.AngicGlobal.com Sales@AngicGlobal.com

Series	Dimensions
TL21033 **Inner and** **Outer Handles** 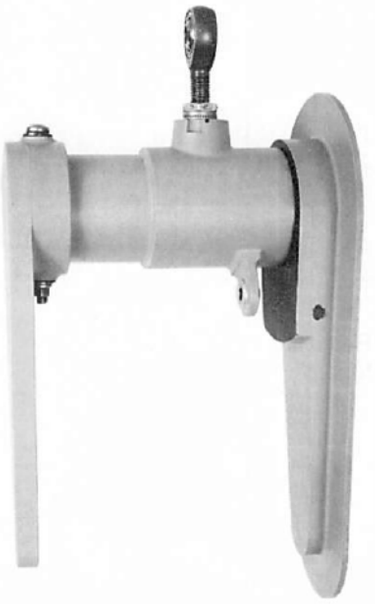	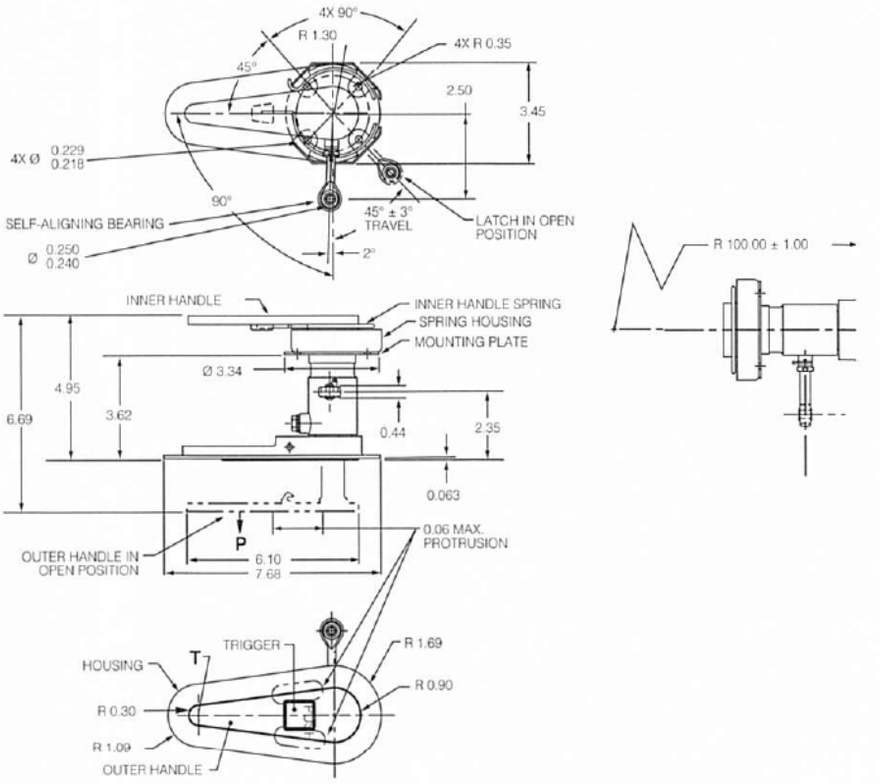
TL21034 **Forward Access Door with** **Inner & Outer Handle** 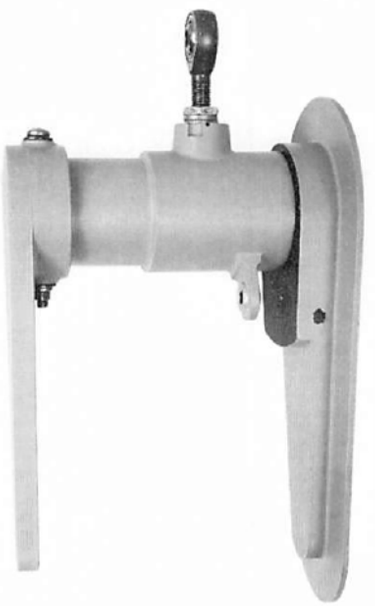	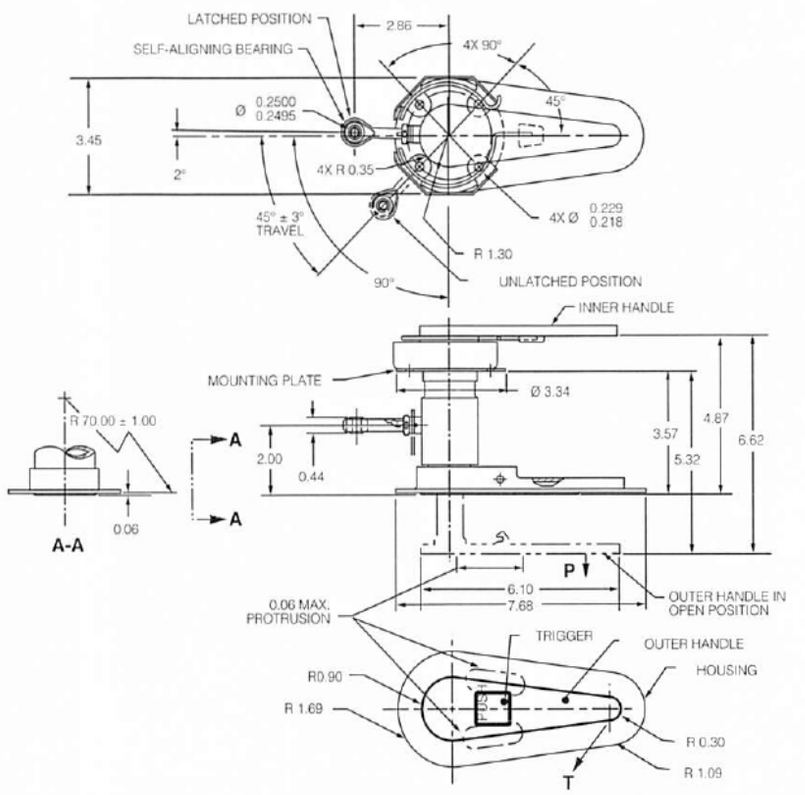

Dimensions specified in inches (millimeters) and pounds (kilograms).
Note: Variables may not represent the same dimensions on all series numbers.

Get quote
Angic Global Solutions 1-888-872-0690
https://www.AngicGlobal.com Sales@AngicGlobal.com

	Material/ Finish	Ultimate Load, lbs.	Max. Torque in-lbs.	Max. Push or Pull Force, lbs.	Weight, lbs.	Feature Notes	Part Number
	Inner Handle, Housing and Actuator: A356-T61 Aluminum Alloy/ Anodize Outer Handle: 17-4PH CRES/ Passivate Mounting Plate: 7075-T6 Aluminum Alloy/ Anodize	45 (20.411)	630 in-lbs.	P=225 @ Room Temperature T=620 @ Room Temperature	2.5 (1.333) Max.	–	**TL21033-101**
	Inner Handle, Housing and Actuator: A356-T61 Aluminum Alloy/ Anodize Outer Handle and Trigger: 17-4PH CRES/ Passivate	45 (20.411)	630 in-lbs.	P=225 @ Room Temperature T=620 @ Room Temperature	2.5 (1.333) Max.	–	**TL21034-101**

Get quote
Angic Global Solutions 1-888-872-0690
https://www.AngicGlobal.com Sales@AngicGlobal.com

Series	Dimensions
TL26000 **Gooseneck, Door** 	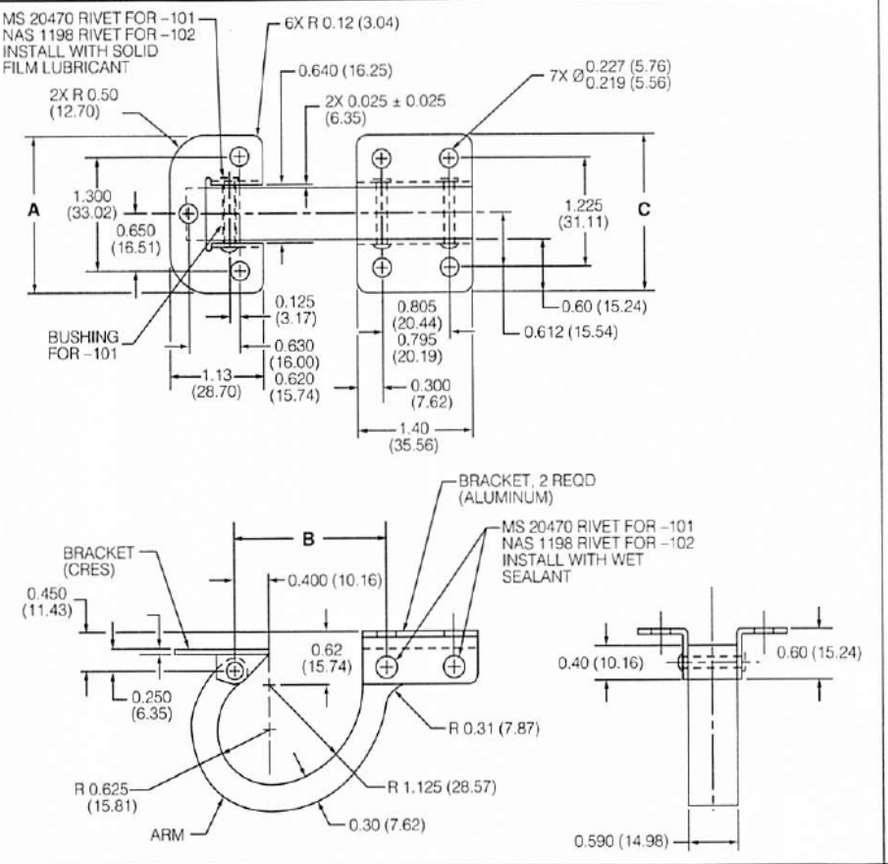
TL26001 **Gooseneck** 	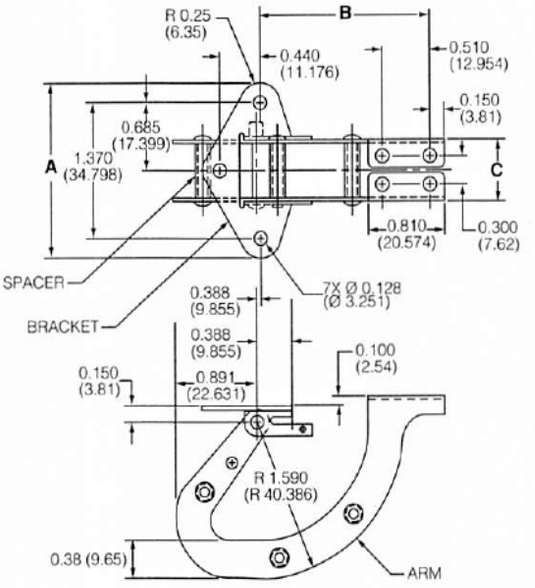

Dimensions specified in inches (millimeters) and pounds (kilograms).
Note: Variables may not represent the same dimensions on all series numbers.

Get quote
Angic Global Solutions 1-888-872-0690
https://www.AngicGlobal.com Sales@AngicGlobal.com

Material/ Finish	Load	Weight, lbs.	A	B	C	Notes	Part Number
Arm and Bracket: Aluminum Alloy/ Anodize Bracket: 302 CRES/ Passivate Bushing: CRES/Passivate, Wet Zinc Chromate Primer	–	.06 (.02) Max.	1.825 (46.355)	1.820 (46.228)	1.790 (45.46)	Rivet: MS 20470 Rivet With Bushing As Pivot Rivet: NAS 1198 Rivet As Pivot	**TL26000-101** **TL26000-102**
Arm and Bracket: 302 CRES/ Passivate Spacer: 302 CRES/ Passivate Rivets: AMS 7228 CRES/ Passivate	–	.06 (.02) Max.	1.75 (44.45)	1.820 (46.228)	0.600 (15.24)		**TL26001-101**

Get quote
Angic Global Solutions 1-888-872-0690
https://www.AngicGlobal.com Sales@AngicGlobal.com

Series	Dimensions
TL26005 **Gooseneck**	



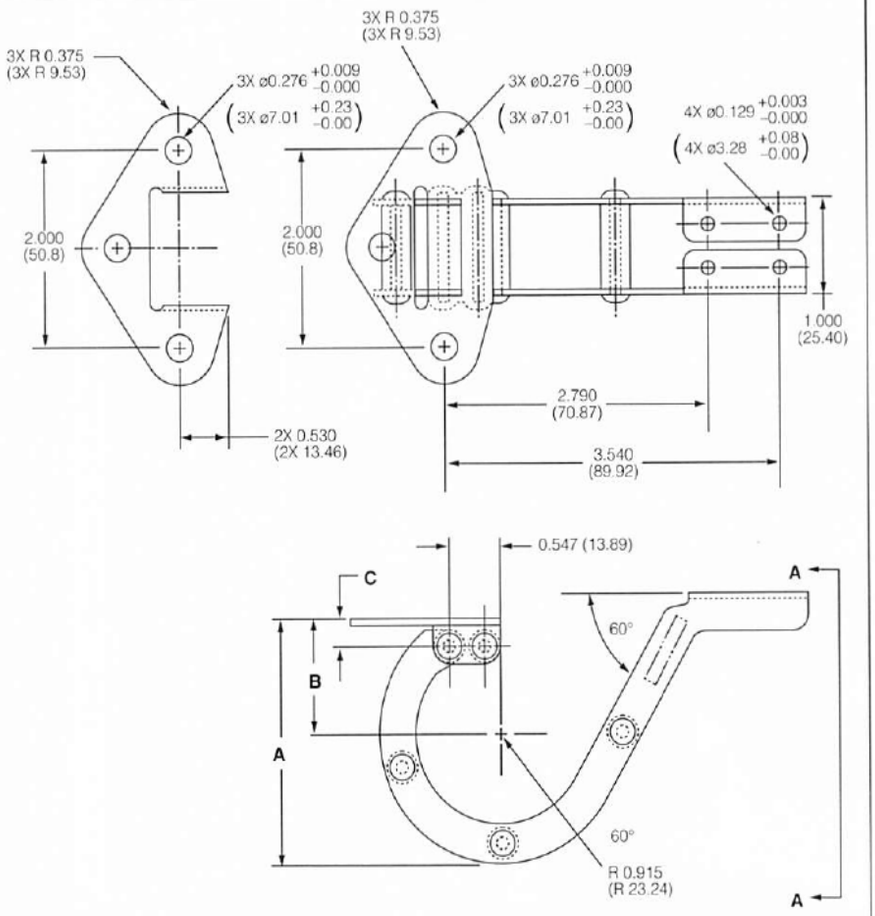

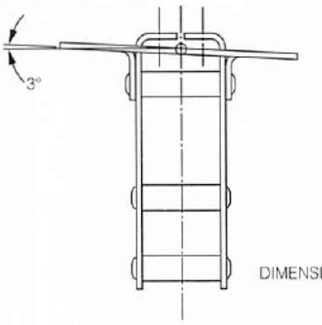

DIMENSIONS SAME AS -101 EXCEPT AS NOTED

A-A

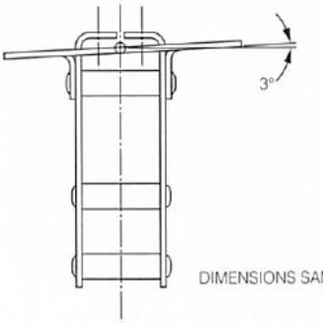

DIMENSIONS SAME AS -101 EXCEPT AS NOTED

A-A

Dimensions specified in inches (millimeters) and pounds (kilograms).
Note: Variables may not represent the same dimensions on all series numbers.

Get quote
Angic Global Solutions 1-888-872-0690
https://www.AngicGlobal.com Sales@AngicGlobal.com

Material/ Finish	Load	Weight, lbs.	A	B	C	Notes	Part Number
Arm and Bracket: 302-304 CRES/Passivate Spacer: 303 CRES/Passivate Rivets: AMS 7228 CRES/Passivate	–	.15 (.06) Max.	2.45 (62.23)	1.551 (29.3395)	0.271 (6.89)		**TL26005-101**
Bracket: 302-304 CRES/Passivate	–	.15 (.06) Max.	2.17 (55.12)	0.884 (22.454)	0.385 ±.005 (9.779 ±0.127)	Angled Mounting Bracket	**TL26005-102**
Bracket: 302-304 CRES/Passivate	–	.15 (.06) Max.	2.17 (55.12)	0.884 (22.454)	0.385 ±.005 (9.779 ±0.127)	Angled Mounting Bracket	**TL26005-103**

Get quote
Angic Global Solutions 1-888-872-0690
https://www.AngicGlobal.com Sales@AngicGlobal.com

Series	Dimensions
TL26006 **Double Acting**	
TL26024 **Contoured, Extruded**	

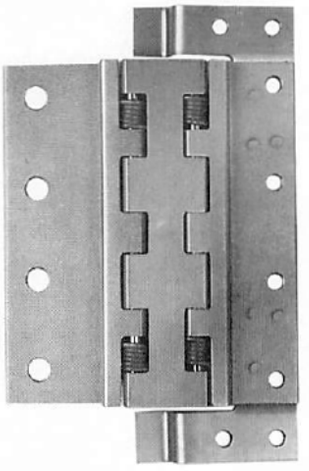

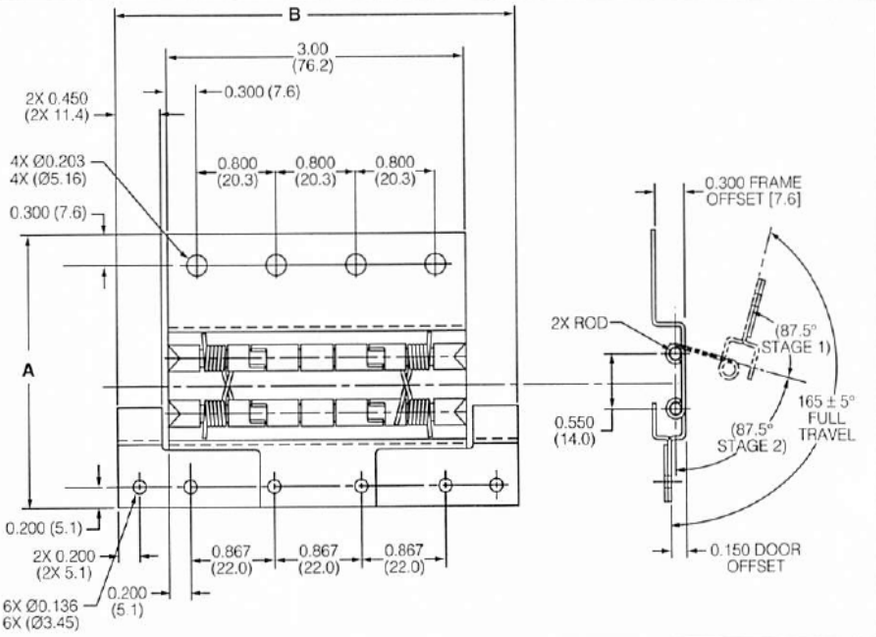

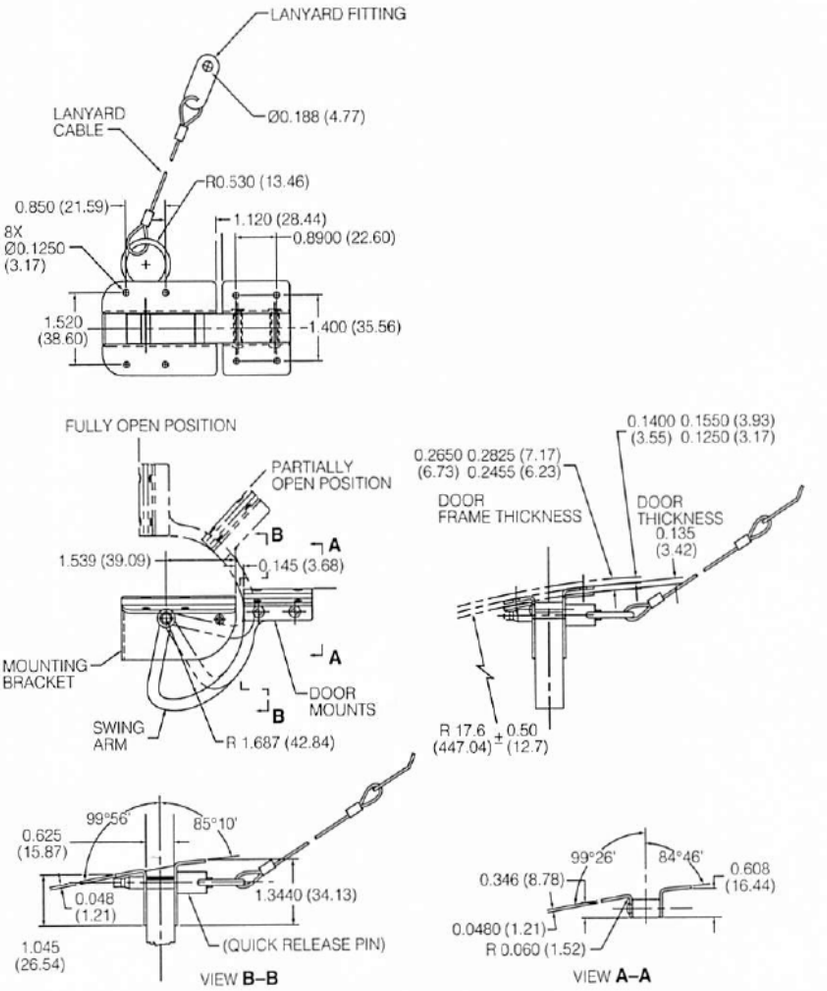

Dimensions specified in inches (millimeters) and pounds (kilograms).
Note: Variables may not represent the same dimensions on all series numbers.

Get quote
Angic Global Solutions 1-888-872-0690
https://www.AngicGlobal.com Sales@AngicGlobal.com

Material/ Finish	Load	Weight, lbs.	A	B	C	Notes	Part Number
Hinges: 302/304 CRES Sheet/ Passivate Springs: 17-7 PH CRES/Passivate Rods: 302/304 CRES/Passivate	–	.08 (.04)	2.67 (67.8)	4.02 (102.1)	–	As Shown Opposite	**TL26006-101** **TL26006-102**
Swing Arm: 7075 -T6 Aluminum Alloy Mounting Bracket, Door Mount (Front and Rear): 17-7PH CRES/ Passivate Stop Pin and Rivets: 15-5PH CRES	–	0.33 (8.38)	–	–	–	As Shown Opposite Swing Arm Action	**TL26024-101** **TL26024-102**

Get quote
Angic Global Solutions 1-888-872-0690
https://www.AngicGlobal.com Sales@AngicGlobal.com

Series	Dimensions	Material/ Finish
TL23003 	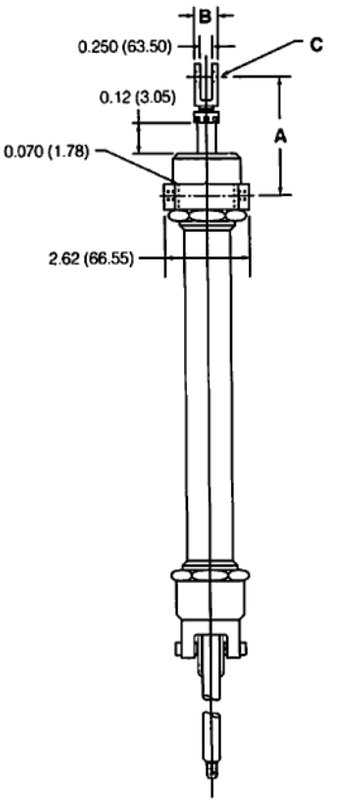	All Aluminum except: Rod and Lock O-Rings and Wiper Rings: Ethylene Propylene
TL23012 	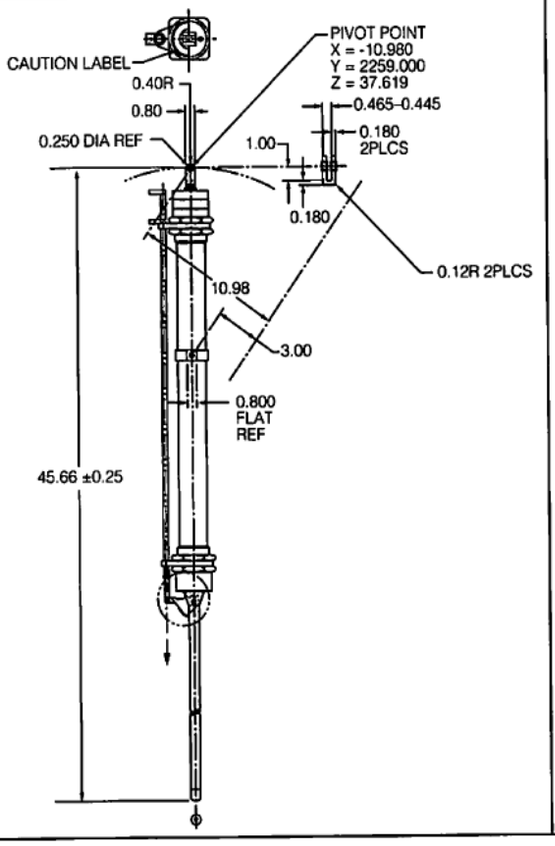	All Aluminum except: Rod and Lock

Dimensions specified in inches (millimeters) and pounds (kilograms).
Note: Variables may not represent the same dimensions on all series numbers.

Get quote
Angic Global Solutions 1-888-872-0690
https://www.AngicGlobal.com Sales@AngicGlobal.com

	Ultimate Load	Max. Load, lbs.	Hydraulic Fluid	Weight, lbs.	Full Stroke Time	Part Number
	–	3000 (360)	Skydrol 500	3.00 (1.36) Max.	8 - 10 Seconds to Extend 2 - 5 Seconds to Retract	**TL23003-101**
	–	3000 (360)	Skydrol 500	12.50 (5.66)	8 - 10 Seconds to Extend 2 - 5 Seconds to Retract	**TL23012-101**

Get quote
Angic Global Solutions 1-888-872-0690
https://www.AngicGlobal.com Sales@AngicGlobal.com

Series	Dimensions	Material/ Finish	
TL23013	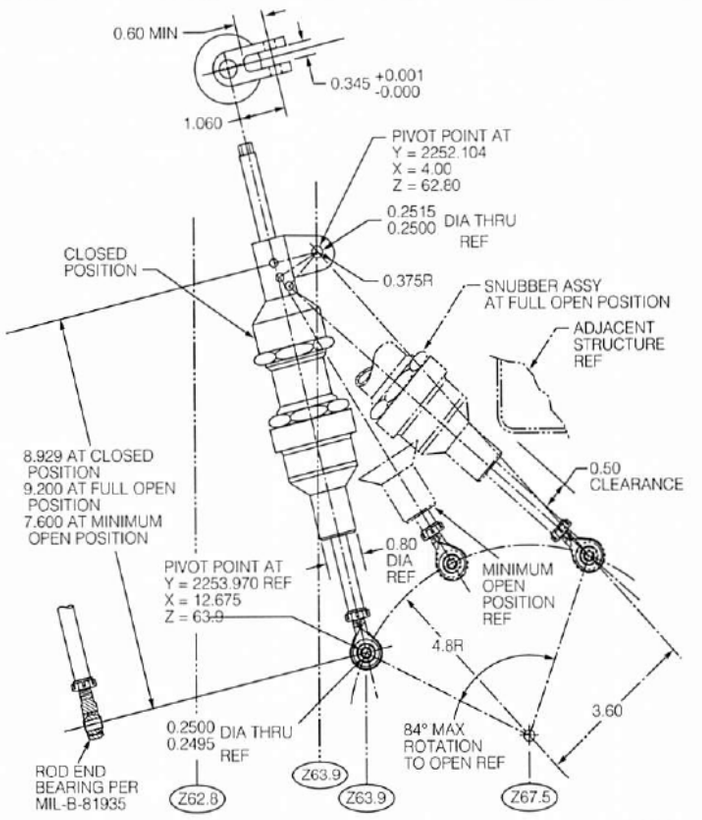	All Aluminum except: Rod	

Dimensions specified in inches (millimeters) and pounds (kilograms).
Note: Variables may not represent the same dimensions on all series numbers.

Get quote
Angic Global Solutions 1-888-872-0690
https://www.AngicGlobal.com Sales@AngicGlobal.com

	Ultimate Load	Max. Load, lbs.	Hydraulic Fluid	Weight, lbs.	Full Stroke Time	Part Number
	750 (340)	–	Skydrol 500	0.973 (0.441)	2 - 4 Seconds Extension or Retraction	**TL23013-101**

Get quote
Angic Global Solutions 1-888-872-0690
https://www.AngicGlobal.com Sales@AngicGlobal.com

Aerospace Latches

Series No.	Page No.	Series No.	Page No.
310643	I-39,I-40	TL10703	I-17,I-18
410672	I-51,I-52	TL10704	I-29,I-30
TL10067	I-3,I-4	TL12079	I-53,I-54
TL10068	I-19,I-20	TL12080	I-55,I-56
TL10101	I-3,I-4	TL12158	I-55,I-56
TL10162	I-9,I-10	TL14004	I-53,I-54
TL10163	I-19,I-20	TL16015	I-57,I-58
TL10176	I-7,I-8	TL16082	I-57,I-58
TL10181	I-21,I-22	TL16119	I-59,I-60
TL10183	I-13,I-14	TL18045	I-41,I-42
TL10184	I-21,I-22	TL18068	I-41,I-42
TL10185	I-7,I-8	TL18069	I-43,I-44
TL10189	I-23,I-24	TL18086	I-37,I-38
TL10190	I-23,I-24	TL18089	I-37,I-38
TL10191	I-25,I-26	TL20050	I-59,I-60
TL10343	I-9,I-10	TL21007	I-61,I-62
TL10349	I-45,I-46	TL21008	I-61,I-62
TL10368	I-45,I-46	TL21030	I-63,I-64
TL10369	I-47,I-48	TL21033	I-65,I-66
TL10370	I-47,I-48	TL21034	I-65,I-66
TL10400	I-25,I-26	TL22013	I-31,I-32
TL10401	I-25,I-26	TL22028	I-33,I-34
TL10402	I-25,I-26	TL22070	I-33,I-34
TL10409	I-27,I-28	TL22071	I-35,I-36
TL10410	I-5,I-6	TL23003	I-73,I-74
TL10588	I-13,I-14	TL23012	I-73,I-74
TL10589	I-5,I-6	TL23013	I-75,I-76
TL10601	I-11,I-12	TL25003	I-49,I-50
TL10601	I-27,I-28	TL26000	I-67,I-68
TL10622	I-15,I-16	TL26005	I-69,I-70
TL10699	I-15,I-16	TL26006	I-71,I-72
TL10700	I-17,I-18	TL26024	I-71,I-72

Avionic Hold-Down Mechanisms

Series No.	Page No.	Series No.	Page No.
CA11098	E-22-E-23	HD12026	E-14-E-15
HD11006	E-24-E-25	HD12031	E-18-E-19
HD11097	E-22-E-23	HD12032	E-18-E-19
HD12006	E-12-E-13	HD12096	E-20-E-21
HD12017	E-16-E-17	HD12145	E-20-E-21
HD12023	E-16-E-17		

Captive Screws

Series No.	Page No.	Series No.	Page No.
21T01	C-2	22T03	C-5
21T02	C-2	.22T04	C-5
21T03	C-3	22T21	C-4
21T04	C-3	22T22	C-4
22T01	C-4	22T23	C-5
22T02	C-4	22T24	C-5

Chassis Latches

Series No.	Page No.	Series No.	Page No.
21L	E-30-E-33	61L	E-34-E-39
40L	E-30-E-33	72L	E-40-E-43

Clamps

Series No.	Page No.	Series No.	Page No.
7C1	F-1,F-2	7C60	F-3
7C11	F-5	7C61	F-3
7C27	F-4	7C70	F-3
7C31	F-2		
7C41	F-5		

Commercial and Industrial Latches

Series No.	Page No.	Series No.	Page No.
104L01	H-62	34L02	H-9
106L01	H-49-H-51	37L1	H-32
118L08	H-60	37L11	H-32
118L09	H-60	37L22	H-31
119L01	H-64	37L25	H-32
119L08	H-65	37L33	H-31
122L01	H-53	37L52	H-30
122L02	H-53	40L2	H-70
122L03	H-53	46L14	H-38
122L11	H-53	46L23	H-38
122L12	H-53	46L26	H-38
122L13	H-53	47L01	H-12
123L01	H-54	47L02	H-12
123L02	H-54	49L01	H-38
123L03	H-54	51L1	H-21
123L11	H-54	51L109	H-22
123L12	H-54	5LL20	H-21
123L13	H-54	5LL3	H-22
137L01	H-36	51L37	H-20
17L01	H-28	51L38	H-20
17L11	H-28	51L5	H-21
18L01	H-29	51L59	H-22
18L13	H-29	51L7	H-22
20L01	H-16,H-17	51L8	H-22
20L02	H-18	51L83	H-20
20L06	H-16,H-17	51L89	H-20
20L15	H-17	58L1	H-40
20L38	H-16,H-17	58L3	H-40
21L1	H-69	58L7	H-40
21L19	H-80,H-90	61L1	H-74
21L2	H-69	61L13	H-83,H-84
29L	H-19	61L14	H-74
30L1	H-8	61L2	H-83,H-84
30L2	H-8	61L35	H-74
30L20	H-8	61L36	H-72,H-73
34L01	H-9	64L1	H-44

Continued on next page

ANGIC GLOBAL SOLUTIONS

Get quote

Angic Global Solutions 1-888-872-0690
https://www.AngicGlobal.com Sales@AngicGlobal.com

Continued from previous page

Commercial and Industrial Latches

Series No.	Page No.	Series No.	Page No.
64L9	H-44	95H01	H-10
64L10	H-44	95H07	H-10
64L11	H-44	95L01	H-10
64L19	H-44	95L07	H-10
65L1	H-46	96H01	H-11
69L19	H-25	96L01	H-11
69L2	H-25	KM610	H-58
69L33	H-24	KM680	H-58
69L37	H-24	PT104L	H-63
69L38	H-24		

Grommets

Series No.	Page No.	Series No.	Page No.
4002-G	A-51	40G10	A-51
4002-H	A-51	40G15	A-52
4002-N	A-51	40G16	A-52
4002-P2	A-52	40G5	A-51
4002-P3	A-52	40G6	A-51
4002-P4	A-52	50S12	A-39
40G1	A-52	50S2	A-39

Locks

Series No.	Page No.	Series No.	Page No.
PTCL01	G-7	PTCL56	G-11
PTCL02	G-8	PTCL59	G-11
PTCL10	G-9	PTCL66	G-12
PTCL12	G-11	PTCL69	G-12
PTCL25	G-10	PTSL01	G-4
PTCL28	G-10	PTSL06	G-5
PTCL38	G-6		

Receptacle "1/4-Turn, Quick Operating and PC Board Fasteners" Cont.

Series No.	Page No.	Series No.	Page No.
119	A-64,A-65	26R3	A-29
15R1	B-3	26R41	A-27
15R5	B-4	26R45	A-27
212	A-28,A-29	26R48	A-27
214	A-48	26R5	A-29,A-34
244	A-48,A-50	26R6	A-28
26R1	A-29	26R51	A-29
26R16	A-28	26R8	A-28
26R18	A-28	28R1	A-34
26R2	A-29	312	A-28,A-34

Receptacle "1/4-Turn, Quick Operating and PC Board Fasteners"

Series No.	Page No.	Series No.	Page No.
34R01	B-12	5R2	A-15
37R01	E-45	5R3	A-15
37R02	E-45	701	A-49
39R01	B-11	751	A-49
40R12	A-48	701E	A-49
40R17	A-49	751E	A-49
40R39	A-50	79R01	B-8
40R44	A-50	79R02	B-8
49R02	B-7	99E10	A-30
50R3	A-42	99R10	A-30
50R4	A-38	99R11	A-27
5R16	A-16	KNQ	A-30

Retaining Rings "1/4-Turn, Quick Operating, Structural Panel and PC Board Fasteners"

Series No.	Page No.	Series No.	Page No.
10S05	B-20	4S10	B-20
15S11	B-3,B-9	4S9	B-20
15S47	B-4	50S17	A-39
17S11	B-20	5S3	E-10
17S6	B-20	5S3-1	A-15
2600-LW	A-26	5S3-2	A-15
2600-SW	A-26	91S3	A-65
2600-SW2	A-26	91S45	A-65
27S5	A-26	99W10	A-26
28S10	A-34	99W11	A-26
3S10	E-10	9S6	B-20
4002	A-58	R4G	A-56
40G26	A-56	R4T	A-56
40S142	A-46		

RivIT Blind Nut

Series No.	Page No.
H111F	D-3,D-4

ANGIC GLOBAL SOLUTIONS Get quote

Angic Global Solutions 1-888-872-0690
https://www.AngicGlobal.com Sales@AngicGlobal.com

Studs "1/4-Turn, Quick Operating, Structural Panel and PC Board Fasteners"

Series No.	Page No.	Series No.	Page No.
10S01	B-20	28S20	A-34
10S04	B-20	28S7	A-34
15S1	B-3	34S01	B-12
15S20	B-2	34S08	B-12
15S51	B-4	36S01	A-20
15S52	B-3	36S05	A-20
17S1	B-20	36S10	A-20
17S4	B-20	36S11	A-20
18S01	B-20	37S01	E-44
18S03	B-20	37S02	E-44
2600	A-24	37S03	E-44
26S107	A-24	37S05	E-45
26S108	A-25	37S06	E-45
26S103	A-24	37S07	E-45
26S109	A-25	38S01	A-22
26S110	A-25	39S01	B-11
26S13	A-24	39S08	B-11
26S135	A-24	4002	A-48
26S22	A-24	40S119	A-48
26S26	A-24, A-25	40S122	A-49
26S34	A-25	40S128	A-48
26S35	A-25	40S37	A-49
26S36	A-25	40S41	A-48
26S37	A-25	40S45	A-48
26S38	A-24	40S47	A-49
26S39	A-24	40S5	A-48
26S40	A-25	40S77	A-49
26S42	A-24	40S79	A-46
26S51	A-24	40S80	A-46
26S82	A-24	40S83	A-47
26S97	A-25	49S06	B-7
26S98	A-25	4S14	B-20
26S99	A-25	4S15	B-20
2700	A-26	50S10	A-38,A-39
27S12	A-26	50S8	A-42
27S17	A-26	5S10	A-14
27S18	A-26	5S25	A-15
27S3	A-26	5S27	A-14
27S8	A-26	5S28	A-14
28S1	A-34	5S34	A-14
28S11	A-34	5S35	A-14
28S14	A-34	5S37	A-15
28S19	A-34		

Tooling (All Product Lines)

Series No.	Page No.	Series No.	Page No.
2S200F	A-31	T106	B-4
2S200M	A-31	T107	B-3
4-GM	A-57	T107	B-9
4-PF	A-57	T147	B-3
4G2C	A-55	T16	A-60
4GC	A-55	T-19	A-55
4GC	A-57	T-19	A-57
4GM100	A-55	T22	A-60
H111	D-7	T92	A-57
H111HG-4	D-6	T98-1	A-26
T-160	E-10	T98-1	A-39
T-26	A-56	T98-1	A-42

Wedg-Tite PCB Retainers and Levers

Series No.	Page No.
53S	E-3
54S	E-4

ANGIC GLOBAL SOLUTIONS

Get quote

Angic Global Solutions 1-888-872-0690

https://www.AngicGlobal.com Sales@AngicGlobal.com

Quote And Sample Request Form

For quicker response, fill out a copy of this form and send by Fax to Camloc/Ram Products.

FAX (310) 784-2656

Please send additional information on Camloc/Ram Products as follows:

Product Of Interest: _____

❑ Send Quotation
❑ Send Sample

P/N _____	Qty. _____
P/N _____	Qty. _____
P/N _____	Qty. _____
P/N _____	Qty. _____

End product to be used on: _____

Status of program is:

❑ Development ❑ Prototype
❑ Preproduction ❑ Manufacturing

Estimated Annual Production quantities: _____

My specific requirements/needs are: _____

_____

_____

❑ Have Applications Specialist contact me.

Company _____

Name _____

Title _____

Street _____

City _____

State _____ Zip _____

Phone (___) _____

Fax (___) _____

ANGIC GLOBAL SOLUTIONS
Get quote
Angic Global Solutions 1-888-872-0690
https://www.AngicGlobal.com Sales@AngicGlobal.com

Camloc/Ram

Camloc/Ram

Camloc/Ram Products
Fairchild Fastener Group
3016 W. Lomita Blvd.
Torrance • CA 90505
310/784-2600 • Fax 310/784-2656

Get quote

Angic Global Solutions 1-888-872-0690
https://www.AngicGlobal.com Sales@AngicGlobal.com